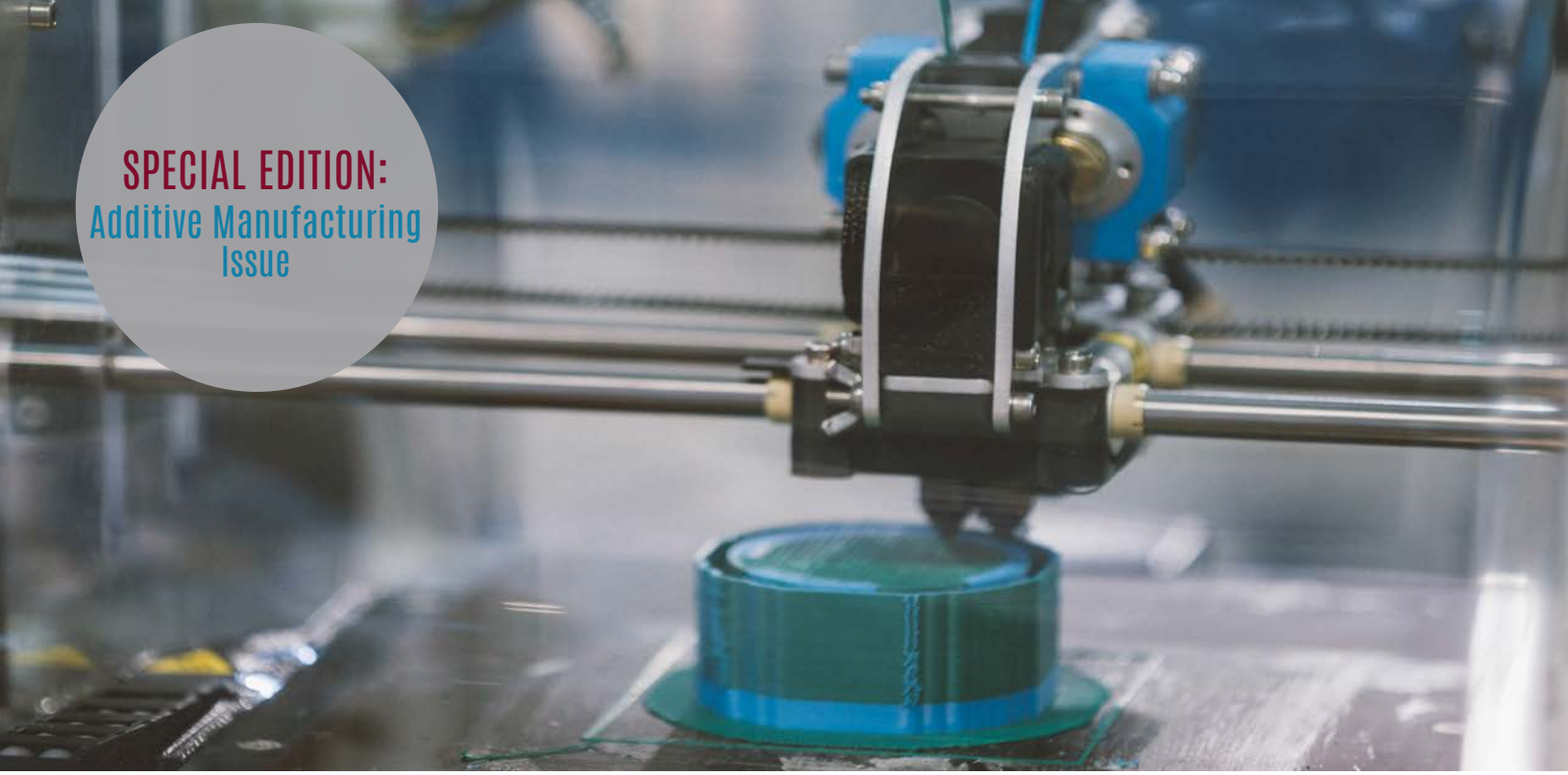

SPECIAL EDITION:
Additive Manufacturing Issue

SANDIA'S INNOVATION MARKETPLACE

A Quarterly update of Available Technologies for Industry

Sandia National Laboratories

June 2016• Vol 3, Issue 2

Welcome to Sandia National Laboratories' Intellectual Property Magazine

Sandia's Innovation Marketplace is a quarterly magazine published by Sandia National Laboratories. This publication highlights exceptional opportunities for licensing Sandia's intellectual property, including patents, copyrights (generally software), trademarks, and mask works. Listings within should not be construed as an offer to license technology. All licenses are subject to negotiation and availability of the intellectual property for licensing. This publication is intended for indications of interest only.

Why Work with Sandia?

Leverage World-Class Technology and Research

For more than 60 years, Sandia has delivered essential science and technology to resolve the nation's most challenging security issues. A strong science, technology, and engineering foundation enables Sandia's mission through a capable research staff working at the forefront of innovation, collaborative research with universities and companies, and discretionary research projects with significant potential impact.

The Best and Brightest

In keeping with our vision to be the nation's premier science and engineering laboratory for national security and technology innovation, we recruit the best and the brightest, equip them with world-class research tools and facilities, and provide opportunities to collaborate with technical experts from many different scientific disciplines. The excitement and importance of our work, an exemplary work environment, partnerships with academia, industry, and government, and our record of historic contributions help us attract exceptional staff. Our employees are recognized by their professional peers for their outstanding contributions.

Sandia National Laboratories

Exceptional service in the national interest

CONTACT US

To discuss licensing opportunities, please send inquiries to: ip@sandia.gov
Or for more information, visit our website: https://ip.sandia.gov

Business Development & Intellectual Property Management
Sandia National Laboratories
P.O. Box 5800
Mail Stop 0114
Albuquerque, NM 87185-0114

Table of Contents

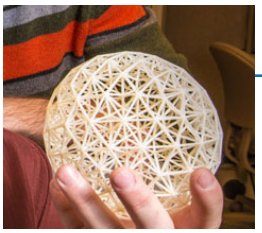

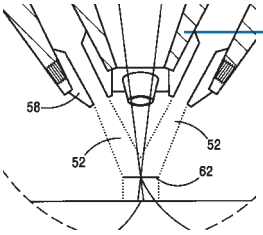

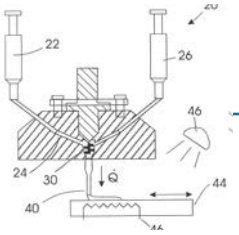

4 Introduction to Additive Manufacturing at Sandia

5 Additive Manufacturing Patents

10 Additive Manufacturing IP Portfolio

12 Additive Manufacturing News Releases

18 Intellectual Property Creation & Licensing Practices at Sandia

Early Leader in Additive Manufacturing

In the 1990s, Sandia National Laboratories emerged as a leader in the field of Additive Manufacturing (AM) with the development of Laser Engineering Net Shaping (LENS) and robocasting. As the field of AM expands, Sandia continues to develop novel tools, methods, software, and materials specifically designed to manufacture parts that can be employed for high-consequence, high-reliability uses. Sandia has applied its expertise in computational mechanics and analysis tools, modeling tools, and researchers well versed in writing code, to develop novel design tools for AM. By introducing topology optimization, our researchers are creating precision, high tolerance, high value parts and systems. Optimization calculations allow engineers to know where more material is needed and how much, thus preventing the overuse of material and still most effectively meeting design demands. With our early advances in the field of AM and our continued efforts to create innovate tools, processes, and materials, Sandia continues to be a leader in the additive manufacturing field.

This publication highlights the AM advancements at Sandia and provides an overview of the intellectual property that comprises our additive manufacturing portfolio.

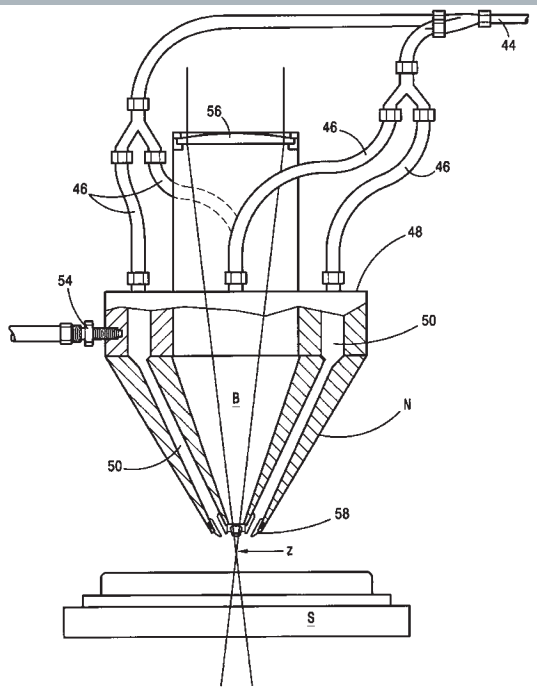

FOUR AXIS POWDER DELIVERY NOZZLE SYSTEM ***LICENSED***

Patent# 6,046,426

Abstract

A method and system are provided for producing complex, three-dimensional, net shape objects from a variety of powdered materials. The system includes unique components to ensure a uniform and continuous flow of powdered materials as well as to focus and locate the flow of powdered materials with respect to a laser beam which results in the melting of the powdered material. The system also includes a controller so that the flow of molten powdered materials can map out and form complex, three-dimensional, net-shape objects by layering the molten powdered material. Advantageously, such complex, three-dimensional net-shape objects can be produced having material densities varying from 90% of theoretical to fully dense, as well as a variety of controlled physical properties. Additionally, such complex, three-dimensional objects can be produced from two or more different materials so that the composition of the object can be transitioned from one material to another.

FREEFORMING OF MATERIALS FROM POWDER SLURRIES **LICENSED**

Patent# 6,401,795

Abstract

In a rapid prototyping system, a part is formed by depositing a bead of slurry that has a sufficient high concentration of particles to be pseudoplastic and almost no organic binders. After deposition the bead is heated to drive off sufficient liquid to cause the bead to become dilatant.

Description

It is an object of this invention to provide a method for rapid prototyping with less than 10% volume, and preferably less than 0.5% volume, of organic binders.

It is a further object of this invention to provide a slurry-for rapid prototyping which has a sufficient volume of solids to be pseudoplastic, and less than 10% volume organic binders.

Additional objects, advantages, and novel features of the invention will become apparent to those skilled in the art upon examination of the following description or may be learned by practice of the invention. The objects and advantages of the invention may be realized and attained as particularly pointed out in the appended claims.

To achieve the foregoing and other objects, and in accordance with the purpose of the present invention, as embodied and broadly described herein, the present invention may comprise a method for rapidly prototyping a part from a material, the method comprising forming a pseudoplastic slurry, depositing a bead of the pseudoplastic slurry through a nozzle onto a surface that moves with respect to the nozzle, and removing liquid from the bead as it is deposited to cause the bead to become dilatant. The slurry consists of a volatile liquid, no more than 10 volume percent nonvolatile binders and dispersants, and insoluble particles of the predetermined material. The slurry becomes dilatant upon deposition by the system in a drying environment.

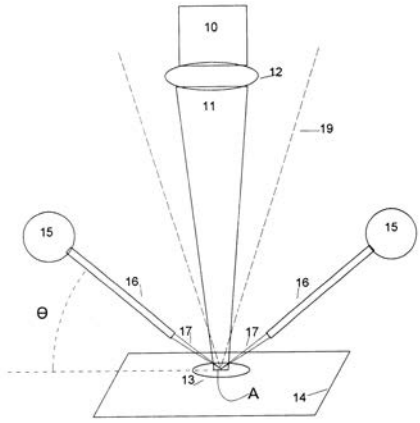

ENERGY BEAM DRIVEN RAPID FABRICATION SYSTEM

Patent# 6,476,343

Abstract

An energy beam driven rapid fabrication system, in which an energy beam strikes a growth surface to form a molten puddle thereon. Feed powder is then injected into the molten puddle from a converging flow of feed powder. A portion of the feed powder becomes incorporated into the molten puddle, forcing some of the puddle contents to freeze on the growth surface, thereby adding an additional layer of material. By scanning the energy beam and the converging flow of feed powder across the growth surface, complex three-dimensional shapes can be formed, ready or nearly ready for use. Nearly any class of material can be fabricated using this system

Description

The present invention provides a system for fabricating objects whereby an energy beam directed onto a growth surface creates a melt-pool thereon. A converging stream of powdered material is injected into the melt-pool, and melts or dissolves therein, thus adding to the volume of the melt-pool. The volume of the melt-pool being roughly fixed by thermal balance dynamics, this injection forces some of the contents of the melt-pool to freeze onto the growth surface, thereby forming a new layer. This process is carried out over appropriate regions of the growth surface to form thereon a cross-section of the desired object. Multiple layers can be formed in a sandwich structure to build up a complex three-dimensional structure.

AERODYNAMIC BEAM GENERATOR FOR LARGE PARTICLES **LICENSED**

Patent# 6,348,687

Abstract

A new type of aerodynamic particle beam generator is disclosed. This generator produces a tightly focused beam of large material particles at velocities ranging from a few feet per second to supersonic speeds, depending on the exact configuration and operating conditions. Such generators are of particular interest for use in additive fabrication techniques.

Description

The present invention is a device to generate tightly focused beams of large (1 .mu.m<<L<<100 .mu.m) material particles. These particles can be generated in quantity, and with velocities ranging from a few feet per second to supersonic velocities with appropriate post-focusing acceleration. Such particle beams are of considerable importance for additive fabrication techniques, where the particles are directed precisely against the spot on a workpiece where they are to be added, whereupon an energetic influence (laser heating, heating due to impact deformation, etc.) causes the particle to merge with the structure of the workpiece. A single line-like beam source can deliver on the order of a cubic centimeter of particles per minute to a growing component, a value considerably in excess of those characteristic of present direct additive fabrication techniques with the further benefit of minimal overspray resulting in much higher efficiency in material usage.

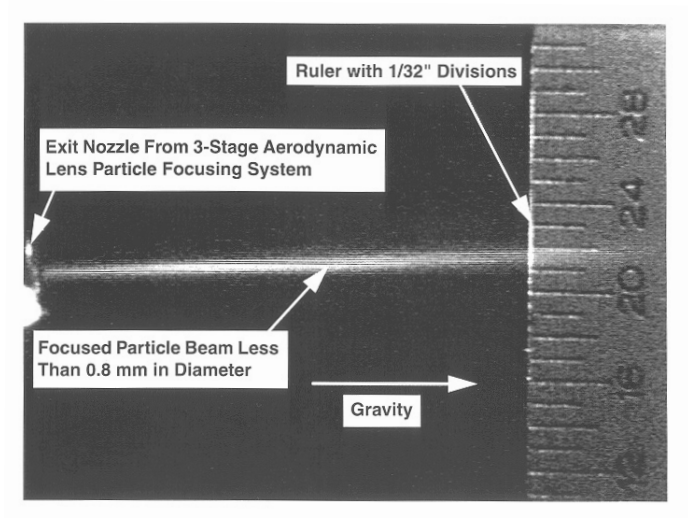

SOLID FREEFORM FABRICATION USING CHEMICALLY REACTIVE SUSPENSIONS

Patent# 6,454,972

Abstract

The effects of processing parameters and suspension chemorheology on the deposition behavior of SFF components derived from polymeric-based gelcasting suspensions combines the advantages associated with SFF fabrication, including the ability to spatially tailor composition and structure as well as reduced tooling costs, with the improved handling strength afforded by the use of gel based formulations. As-cast free-formed Al.sub.2 O.sub.3 components exhibited uniform particle packing and had minimal macro-defects (e.g., slumping or stair casing) and no discernible micro-defects (e.g., bubbles or cracking).

Description

It is an object of this invention to provide solid freeform fabrication using a computer-controlled extrusion apparatus where as-cast SFF-derived components exhibit uniform particle packing comparable to bulk gelcast components with minimal macro-defects (e.g., slumping or stair casing) and no detectable micro-defects (e.g., bubbles or cracking).

It is also an object of this invention to use gel-casting suspensions as feedstock material in a SSF system to tailor deposition behavior, and hence, component properties of SFF-derived, advanced ceramic components.

These and other objects of the invention may be attained by a method for freeform fabrication of objects comprising providing a first fluid in a first container, providing a second fluid in a second container; feeding the first and second fluids to a mixing chamber; mixing the first and second fluids in the mixing chamber to form a third fluid; and forming an object by depositing a bead of the third fluid from the mixing chamber onto a platform that moves relative to the mixing chamber, the third fluid gelling shortly after being deposited.

MULTIPLE BEAM SYSTEM FOR MATERIAL DEPOSITION

Patent #6,143,378

Abstract

A process for additive manufacture by energetic wire deposition is described. A source wire is fed into a energy beam generated melt-pool on a growth surface as the melt-pool moves over the growth surface. This process enables the rapid prototyping and manufacture of fully dense, near-net shape components, as well as cladding and welding processes. Alloys, graded materials, and other inhomogeneous materials can be grown using this process.

Description

The present invention relates generally to a process for manufacturing components, said process comprising energetic additive manufacturing with wire feed, wherein at least one material layer of said component is grown by forming a melt-pool on a growth surface, feeding one or multiple source wires into the melt-pool, which thereby melt or dissolve, thereby forming an alloy with the material of the growth surface, and moving the melt-pool across the growth surface.

METHOD FOR PRODUCING A NET-SHAPED AEROGEL

Patent# 6,258,305

Abstract

A method of net-shaping using aerogel materials is provided by first forming a sol, aging the sol to form a gel, with the gel having a fluid component and having been formed into a medium selected from the group consisting of a powder, bulk material, or granular aerobeads, derivatizing the surface of the gel to render the surface unreactive toward further condensation, removing a portion of the fluid component of the final shaped gel to form a partially dried medium, placing the medium into a cavity, wherein the volume of said medium is less that the volume of the cavity, and removing a portion of the fluid component of the medium. The removal, such as by heating at a temperature of approximately less than 50.degree. C., applying a vacuum, or both, causes the volume of the medium to increase and to form a solid aerogel. The material can be easily removed by exposing the material to a solvent, thereby reducing the volume of the material. In another embodiment, the gel is derivatized and then formed into a shaped medium, where subsequent drying reduces the volume of the shaped medium, forming a net-shaping material. Upon further drying, the material increases in volume to fill a cavity. The present invention is both a method of net-shaping and the material produced by the method.

Description

According to the present invention, a method of net-shaping using aerogel materials is provided by forming a sol, aging the sol to form a gel, the gel having a fluid component, forming the gel into a final shaped gel material, derivatizing the final shaped gel material to render the material unreactive toward further condensation, removing a portion of the fluid component of the final shaped gel material to form a partially-dried medium, placing the partially-dried medium into a cavity, with the volume of the medium being less than the volume of the cavity, and removing a portion of the fluid component of the medium. This removal causes the volume of the medium to increase, thereby forming a net-shaped material. The steps of

forming a gel and a final shaped gel material can take place in any order after the formation of the sol. The sol comprises at least one metal oxide, metalloid oxide, hydroxide, alkoxide, oxohydroxide, or oxoalkoxide. The aging occurs by a method selected from the group consisting of heating the sol, adding an acid to the sol, and adding a base to the sol. The step of derivatizing the final shaped gel material is performed by adding a derivatizing agent, where the derivatizing agent can be an organofunctional silane, an alcohol amine, a carboxylic acid, and a .beta.-diketonate, such as trimethylchlorosilane and hexamethyidisilazane. The fluid component can be removed by heating, applying a vacuum, or both. The final shaped gel material can be a variety of materials, including a powder, bulk material, and granules. Upon adding a solvent to the net-shaped material, the material is again reduced in volume, thereby facilitating removal of the material from said cavity.

In another embodiment, a method is provided to first form a sol, the sol is aged to form a gel, the gel is then derivatized to render the material unreactive toward further condensation and the gel is formed into a final shaped gel material, thereby creating newly-exposed surfaces. These surfaces can be optionally be derivatized again. A portion of the fluid component of the final shaped gel material is removed to form a partially-dried medium, with the partially-dried medium having the property of increasing in volume upon subsequent drying. This medium can be stored for lengthy periods of time (such as weeks to months under proper environmental conditions to prevent moisture addition or drying). The material can then be placed into a cavity and more of the fluid component removed, causing the volume of the medium to increase, thereby forming a net-shaped material.

The present invention is both a method of net-shaping and the material produced by the method.

METHOD FOR MAKING A BIO-COMPATIBLE SCAFFOLD **LICENSED**

Patent: 6,993,406

Abstract

A method for forming a three-dimensional, biocompatible, porous scaffold structure using a solid freeform fabrication technique (referred to herein as robocasting) that can be used as a medical implant into a living organism, such as a human or other mammal. Imaging technology and analysis is first used to determine the three-dimensional design required for the medical implant, such as a bone implant or graft, fashioned as a three-dimensional, biocompatible scaffold structure. The robocasting technique is used to either directly produce the three-dimensional, porous scaffold structure or to produce an over-sized three-dimensional, porous scaffold lattice which can be machined to produce the designed three-dimensional, porous scaffold structure for implantation.

Sandia's Additive Manufacturing IP Portfolio

Title
Freeforming of Materials from Powder Slurries
Apparatuses and Methods for Shuttering an Aerosol Particle Stream
Energy Beam Driven Rapid Fabrication System
Multiple Beam System for Material Deposition
Four Axis Powder Delivery Nozzle System
Aerodynamic Beam Generator for large particles
Two Fluid Hydrodynamic Printing
Powder delivery improvements for fed powder additive manufacturing
Metallic Nanoink Development for Direct Write Applications
Method for Producing a Net-Shaped Aerogel
Solid Freeform Fabrication Using Chemically Reactive Suspensions
Method for Producing a Net-Shaped Aerogel
Method for Making a Bio-Compatible Scaffold
AM Tool Path Generator with Embedded Process Control Commands
Completely Additively Manufactured Actuator

Tools

Materials

Process

Application No.	Patent No.	Filing Date	Issue Date
	6401795		
62/301,145		2/29/2016	
09/066,623	6476343	4/24/1998	11/5/2002
09/076,402	6143378	5/12/1998	11/7/2000
08/676,547	6046426	7/8/1996	4/4/2000
09/394,185	6348687	9/10/1999	2/19/2002
14/933,988		11/5/2015	
62/208,929		8/24/2015	
62/269,681		12/18/2015	
09/539,199	6258305	3/29/2000	7/10/2001
09/721,835	6454972	11/22/2000	9/24/2002
09/539,199	6258305	3/29/2000	7/10/2001
10/831,735	6993406	4/23/2004	1/31/2006
62/209,167		8/24/2015	
62/290,552		2/3/2016	

Sandia Labs News Releases

Techniques could create better material, design in high-consequence uses

ALBUQUERQUE, N.M. — Imagine a table with sinuous legs resembling the twisting shape of an inverted swamp cypress trunk. Those flowing legs might make the table stronger, better able to handle whatever someone piles on it.

Topology optimization achieved the unique shape of the lantern bracket held by Sandia National Laboratories' Ted Blacker and displayed in the topology optimization program behind him. The computer program started as a square block and, following parameters set by a designer, drew I-beam-like supports and plates with filleted attachments to reduce stress concentrators where one member meets another. (Photo by Randy Montoya) Click on the thumbnail for a high-resolution image.

Sandia National Laboratories researchers believe such organically shaped designs, achieved through a technology called topology optimization, could enable better parts for national security systems and other vital uses. Coupled with advanced additive manufacturing, familiar to most people in its 3-D printing incarnation, it opens possibilities for complex shapes that conventional manufacturing methods can't handle. Partnering the technologies also offers the potential to embed sensors or wiring within a structure as it forms or combine parts to save time and money, reducing the number of joints or other interfaces that could be points of failure.

Before the techniques can be widely employed in high-reliability, high-consequence uses, however, researchers must understand both how to create the best shapes and guarantee material properties.

"There are aspects of this marriage between additive manufacturing and topology optimization that are going to be critical for us to address if we're really going to do this well," said Simulation Modeling Sciences manager Ted Blacker. "If all you do is make the same old parts a new way, it's taking advantage of only a fraction of what is possible in additive manufacturing. And if you make these new optimal parts but you can't assure material quality, they're of no use."

Sandia is well-suited to tackle the problem because of its expertise in computational mechanics and analysis tools it developed in engineering codes such as Sierra and Alegra, modeling tools such as Cubit and expertise with high-performance computers. Sandia also has

experience in handling large amounts of data, people who know how to write and adjust codes, skill in materials science and a history of inventing additive manufacturing techniques. In the 1990s, Sandia developed Laser Engineered Net Shaping (LENS), a process to print complex metal parts from powders, and Robocasting, a 3-D process that forces ceramic slurry through a pressurized needle to form a part that is fired in a furnace to harden it. Both processes have been commercialized.

Additive manufacturing handles complex shapes

Additive manufacturing encompasses techniques to make parts or whole assemblies in plastic, ceramic and metal. "We need to develop computational tools that will enable us to make the leap to new types of designs, tools that will make modern computer-aided design systems seem as quaint as drafting tables and T-squares," said Andre Claudet, a manager in the Precision Mechanical Systems department.

Sandia is particularly interested in an advanced metal additive process that uses a laser to melt successive layers of metal powder to build shapes. It has the potential to make components that perform better and weigh less. However, the process alters a material's microstructure, which can dramatically affect its properties and how parts perform. Researchers need to understand how the extreme temperatures and heating and cooling rates affect material properties.

The largest barrier for new materials is understanding their properties well enough to certify that they meet rigorous requirements for high-consequence uses. Materials assurance, a key to certification and qualification, is "the first, most immediate obstacle that we need to overcome," Claudet said.

Important material characteristics, such as strength or ability to withstand stress, depend on many things, including how a material's internal structure is affected by phase changes — for a simple analogy, think ice melting into water, then refreezing into ice again.

Parts must meet multiple requirements for mechanical, thermal or vibration performance — particularly crucial when something is intended for a nuclear weapon, a satellite or an airplane. "How do you actually verify the material is what you want? For some applications it's not a big deal. For high-consequence hardware it's a very big deal," said Bradley Jared, who works in the Coatings and Additive Manufacturing department.

Techniques together could save material, time, money

Using additive manufacturing with topology optimization could allow several parts to be combined into one, saving material, eliminating possible weak points and removing the need to model what could happen at those interfaces, he said. "Suddenly you've simplified a part for simulation, for testing and for qualification," he said.

Additive manufacturing also is efficient for low-volume production. It's especially compelling early in product development because frequent design changes can quickly be evaluated, Jared said.

Sandia National Laboratories researcher Bradley Jared sits in front of a new selective laser melting machine at Sandia for metal additive manufacturing as he holds two prototype housings designed through a technology called topology optimization. Sandia researchers who are exploring additive manufacturing for nuclear weapons and other national security needs say they need to understand how additive manufacturing processes affect the properties of materials that are generated. (Photo by Randy Montoya). Click on the thumbnail for a high-resolution image.

The technique could save time and money in the near term in tooling, fixtures and jigs used to manufacture components, since most tooling items don't have to be certified like an actual part, said Materials Engineering and Manufacturing Science and Technology senior manager Mark Smith. "We're already making very extensive use of additive in those areas," he said.

Certifying materials will perform as expected requires experiments using instruments to understand what's happening and sophisticated computations to verify that material properties meet specifications. For accurate simulations, researchers must identify what happens as the technique lays down successive layers, but it's difficult to measure temperatures in bottom layers as other layers form on top.

"We can't embed anything in those lower layers because that would change the behavior," said Anthony Geller, manager of the Fluid and Reactive Processes department, which models and simulates fluid and multiphase flows. Simulations, aimed at calculating real-world results using large computers, can predict temperatures in inaccessible layers or study parameters like particle size distribution that would be difficult and costly to examine by experiments alone. Experiments can validate the model.

Engineering analysis to predict optimal shapes takes full advantage of additive manufacturing, but poses an extremely difficult computational problem. Static loads, something sitting on top of a table, are easy to include. Dynamic loads, someone jumping on the table, are not.

Diagnostics could include a thermal camera to learn about the melting process and metallurgy. Some studies have used optical cameras to see how powder disburses in a layer and to study the laydown process.

"Right now we don't have a whole lot of information coming off the machine and off the process," Jared said. "We don't know what we don't know."

Microstructure properties perhaps could be tailored

Understanding how material forms might eventually lead to custom-tailored microstructure properties.

"So you can have different material, different microstructures, different properties in different regions that can be incorporated as part of the design process if we can understand it well enough," Smith said. "That's sort of the long-term vision: You would not only design the geometry, but actually design the microstructure of the part as you build it."

Engineers today sometimes overbuild because they're uncertain about material properties. However, topology optimization assumes certain properties as it follows design specifications. "The optimization says that if we have that tiny curved strut that's very thin, that's all the material you really need to carry the load," Geller said. "But if we have to make it thicker because of our uncertainty, we're losing that benefit."

Blacker said Sandia is working on "robust optimization," letting calculations derive a shape that will meet requirements with point-by-point uncertainties in material properties or in loading conditions. Such uncertainty quantification determines the likelihood of outcomes when some aspects of a problem aren't known, and predicts results in a statistical sense.

With topology optimization, engineers start with an allowable space — the area where the part fits — then specify functional requirements, "how heavy they will allow it to be, what material they want to use, the loads and the constraints," Blacker said. "They allow the optimization calculations to determine where the material is needed, placing material only where it will be used most effectively to meet design demands."

Designs are driven by the functions required

Thus, a designer no longer focuses on creating a shape, but drives the design by the function required, perhaps choosing tradeoffs between such requirements as rigidity and ability to conduct heat. Prioritizing stiffness produces a shell-like structure, with material pushed outward to maximize rigidity. Making thermal transfer more important produces a structure with more massive legs, natural paths for heat. If stiffness and heat transfer are equally important, the result is a truss-like structure that adds stiffness but still has material in the legs.

Designers tell the program, "'Here are my engineering requirements; you create my geometry for me,' a major revolution in how we do design," Blacker said.

Topology optimization requires engineering judgment and thinking through the entire problem. Parameters such as feature size control whether you get a tree trunk or a spider web-like structure holding up a tabletop. That means designers must specify the problem carefully. For example, if you don't tell the program to secure the legs so the table doesn't move, it adds cross members along the floor to increase strength, even though that also prevents a chair from sliding under the table. "With topology optimization, you get what you asked for, whether that's what you wanted or not," Blacker said.

Thus, the technique requires what he calls interactive steering. If engineers watching a shape form on a computer screen realize they didn't put in enough information, they can stop the program. "Where we stopped we say, 'Add this additional constraint,' and let it continue," Blacker said. "Even though the calculations are being done in batch mode on very large machines, we can still have an interactive design environment on those machines. We think it's a very powerful addition."

Additive manufacturing is a tool, not a panacea, and won't replace traditional manufacturing for everything, Smith said. "We're not going to print a complex mechanical assembly with precision moving part anytime in the near future," he said. "But there may be some applications where it offers unique advantages for us."

He believes Sandia can make significant progress toward tying materials assurance and topology optimization together in three to five years but said it could take a decade or more to reach that ultimate design optimization goal.

Researchers must balance what can be accomplished now against the work still needed to qualify parts. "I don't want to minimize the potential benefit but I also don't want to minimize that there's still a lot of work to be done," Geller said.

LICENSING SUCCESS STORY

After the development of the Laser Engineering Net Shaping (LENS) process which allows for the printing of complex metal parts from powder at Sandia, it was licensed by Optomec and utilized as a breakthrough manufacturing technology for companies around the world. This technology transfer from Sandia to Optomec led to the commercialization of the LENS technology which has allowed for the fabrication of extremely useful metal components which can be found in a range of items from medical implants to aircraft engine parts.

Sandia News Release

Robocasting: Sandia develops new way to fabricate ceramics

ALBUQUERQUE, N.M. -- An engineer at the U.S. Department of Energy's Sandia National Laboratories has developed a new way to fabricate ceramics that requires no molds or machining.

Called robocasting, it relies on robotics for computer-controlled deposition of ceramic slurries -- mixtures of ceramic powder, water, and trace amounts of chemical modifers -- through a syringe. The material, which flows like a milkshake even though the water content is only about 15 percent, is deposited in thin sequential layers onto a heated base.

"Layer by layer the part grows before your eyes," says Joe Cesarano, the engineer who originated the concept. "The robot squeezes the slurry out of the syringe, almost like a cake decorator, following a pattern prescribed by computer software."

Sandia is constantly pursuing better ways to make ceramics because the materials are "very important to Sandia's mission," Cesarano says. Ceramics are found in products that touch just about everybody's life. They're in household appliances, automobiles, airplanes, computers and medical equipment and have a variety of functions ranging from structural to electrical to optical.

Bob Eagan, Sandia's vice president for Physical Sciences and Components, says robocasting may change the future of ceramics manufacturing.

"It has the potential of giving us a tool for making ceramic parts that can't be built today using existing methods," he says. "Also, it may result in cheaper and faster fabrication of complex parts."

Because the new method allows a dense ceramic part to be free-formed, dried, and baked in less than 24 hours, it is perfect for rapid prototyping. Engineers can quickly change a design of a part and physically see if it works.

More traditional ceramic fabrication methods may take weeks to go from a design to an actual part. For example, the standard dry pressing method requires ceramic powder to be compacted into a solid hunk of material, a billet. To fabricate a complicated part, the billet must be sculpted into the final shape with costly machining.

Other ceramic processing techniques, such as slip

casting, gel casting, and injection molding, can yield complicated ceramic parts but require the design and manufacture of molds prior to fabrication.

Besides prototyping, Cesarano sees the new method also being used in the actual manufacturing of ceramics.

The challenge in robocasting, Cesarano says, is in the science of developing ceramic slurries that actually contain more solid than liquid but exhibit a fluidlike consistency and flow.

"By understanding the colloid science and manipulating the powder surface chemistry, we are able to make ceramic slurries that are up to 85 percent ceramic powder and 15 percent water," Cesarano says. "The high solid content minimizes the amount of drying and shrinkage."

The right slurry properties are also essential for rapid drying of the material. Within 10 to 15 seconds of being deposited, the slurry must dry from a fluidlike state into a solidlike state so that the next layer can be added. If the slurry is too fluid, the deposits will come out as liquid beads that spread uncontrollably. If it is too thick, deposits are like rope. With the proper consistency, each deposited bead is a rectangular cross section with relatively straight walls and flattened tops. Such a structure becomes a sound foundation upon which more layers can be deposited.

After the part is formed by layering and completely dried, it is baked in a furnace at very high temperatures so that the particles can "densify," a process called sintering. Sintering temperatures typically range from 1,000-1,700 degrees C for two hours, depending on the specific ceramic being sintered.

Cesarano says robocasting is "no more conceptually complicated than caulking a bathtub." The difference is that when caulking a tub, the caulking gun moves as it deposits the material. In robocasting, the syringe stays in the same position and the base moves.

Robocasting has other virtues besides requiring limited machining and no molds and being able to make complex parts in less than 24 hours.

"Unlike the more traditional methods of ceramic fabrication, this has the advantage of being able to apply more than one material at a time," Cesarano says. "Thus, materials can be graded, for example going from a ceramic material to a metal within one part without causing structural damage."

Another positive feature is that the technique enables discrete placement of a "fugitive" material -- material that would evaporate or burn away during the baking process. This is useful for creating a part that has internal structure-cooling channels, for example.

Cesarano has been researching the new technology for about two-and-a-half years, collaborating with University of Arizona Professor Paul Calvert.

Following publication of the new technology in the April issue of Ceramic Industry, Cesarano received about 20 inquiries from companies about the new technique. He currently is working with one company, prototyping a ceramic part for use in fabricating fiber optics for advanced X-ray diffraction applications.

Intellectual Property Creation & Licensing Practices

INTELLECTUAL PROPERTY CREATION

Sandia's intellectual property results primarily from R&D conducted for the government in the national security sector. Our laboratory collaborates with industry, leveraging different strengths to develop innovative technology. We perform internal R & D directed at the most challenging issues in national security, for which breakthroughs would provide exceptional value to government and industry. All totaled, Sandia has more than 1600 patents and 550 commercial copyrights, the bulk of which are available for licensing.

LICENSING SANDIA'S INTELLECTUAL PROPERTY

Sandia's intellectual property may be licensed for commercial use (internal or commercial sale), test and evaluation, or execution of a government contract. One may also secure an option on a future license. Example licenses include:

- Commercial Patent License
- Commercial Copyright License (software or design plans)
- Commercial Hybrid License (copyright and patent)
- Test and Evaluation License
- License Option
- Government Use Notice

Sandia is mandated by the Department of Energy to move its technology to the marketplace for the benefit of the U.S. economy. Given our national security focus, government is the primary customer for many Sandia licensees, but our technologies also find use in the industrial and consumer markets. Sandia issues licenses to companies ranging in size from start-ups to multinationals. Our qualification procedure considers a company's ability to bring a product to market as conveyed by their business plan, among other factors. The possibility to create a new company that can leverage our technology and achieve substantial growth remains an area of significant interest for Sandia.

Sandia National Laboratories is operated and managed by Sandia Corporation, a wholly owned subsidiary of Lockheed Martin Corporation. Sandia Corporation operated Sandia National Laboratories as a contractor for the U.S. Department of Energy's National Nuclear Security Administration (NNSA) and supports numerous federal, state, and local government agencies, companies, and organizations.

Sandia's

INNOVATION MARKETPLACE

A QUARTERLY UPDATE OF AVAILABLE TECHNOLOGIES FOR INDUSTRY

To discuss licensing opportunities, please send inquiries to: ip@sandia.gov
Or for more information, visit our website: http://ip.sandia.gov

Business Development & Intellectual Property Management
Sandia National Laboratories
P.O. Box 5800
Mail Stop 0114
Albuquerque, NM 87185-0114

Exceptional service in the national interest

Sandia National Laboratories is a multi-program laboratory managed and operated by Sandia Corporation, a wholly owned subsidiary of Lockheed Martin Corporation, for the U.S. Department of Energy's National Nuclear Security Administration under contract DE-AC04-94AL85000.SAND2016-5518 M