Secondary Use of Vehicle Batteries in Power Systems

Secondary Use of Vehicle Batteries in Power Systems

Objective

The objective is this project is to carry out a collaborative effort among ORNL, original equipment manufacturers (OEM)s, and other partners to develop a cogent and informed view of the economic and technological value of secondary use of EV batteries in grid support.

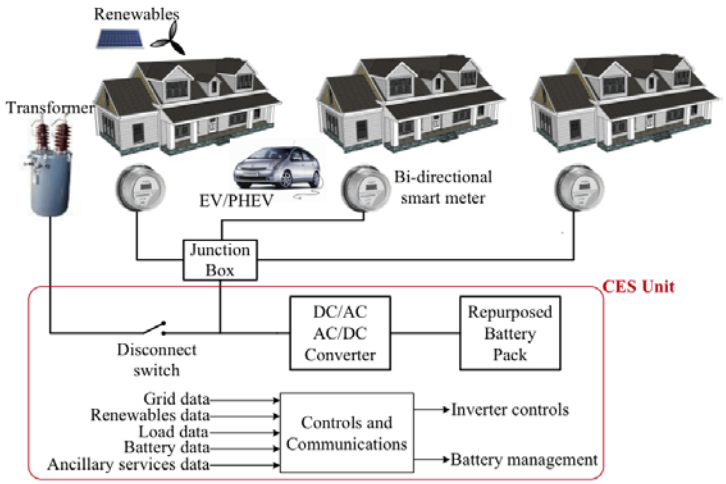

Life-cycle Funding Summary

FY12	FY13
300k	?k

Technical Scope

CES is one of the highlighted synergistic applications with a high value to cost relationship. Specific grid services related to CES (community energy storage) is being demonstrated through testing and modeling in a coordinated effort with GM and ABB. Control systems for these services is also under development.

Objective:

Grid Services through CES using Secondary Batteries

- Demonstrate specific grid services related to CES (community energy storage) through testing and modeling in a coordinated effort with GM and ABB using secondary batteries.
- Develop control approaches for each service in coordination to be provided by the CES. The focus will be on the development of the power electronics interface and control for CES application. The specific applications examined:
  - delivering peak shaving or increased load factor delivery at the residential level
  - providing potential regulation and spinning services via a signal received from a central control system (i.e., aggregator, utility, or ISO)
  - providing voltage support through reactive power when required, and,
  - providing uninterrupted service.
- Incorporate the results of the experimental studies in techno-economic model

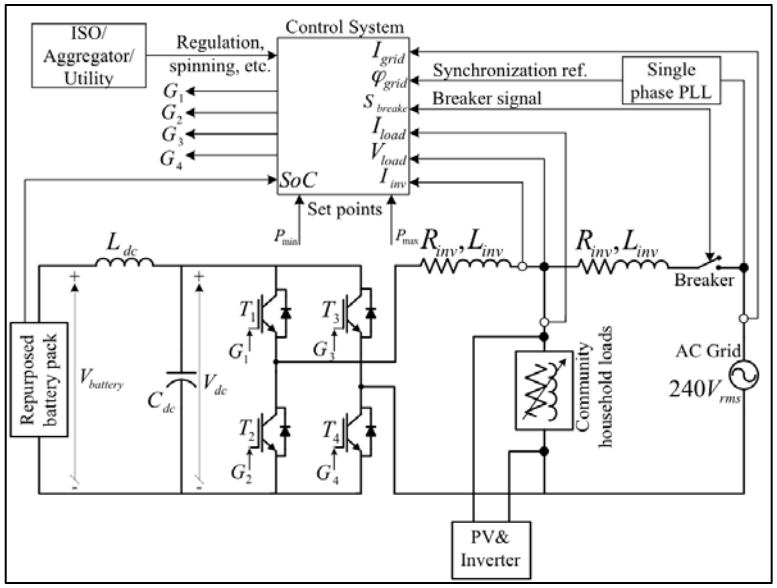

Needs and Challenges:

Identify Challenges Delivering Grid Services through CES

- Understanding the capability of CES to provide various services.
- Capturing the performance of a Secondary Use Battery
- Attaching economic value to CES through synergistic benefits.
- Uncertainties of large-scale implementation of CES units (installations, aggregation, controls, benefits, communications, smart grid applications).

Technical Approach:

Overall Approach

2011

Economic Analysis

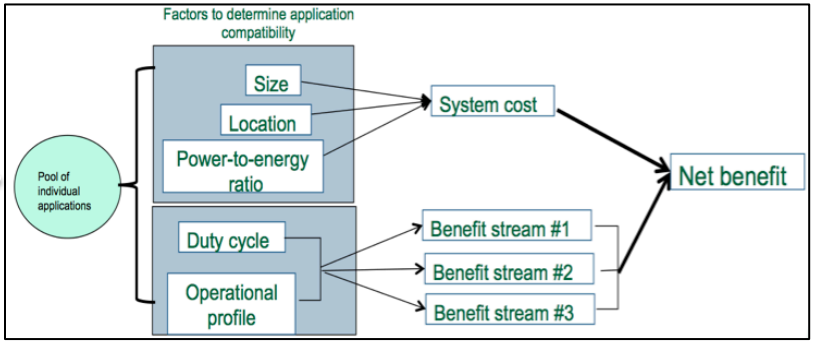

2012

Modeling & Controls

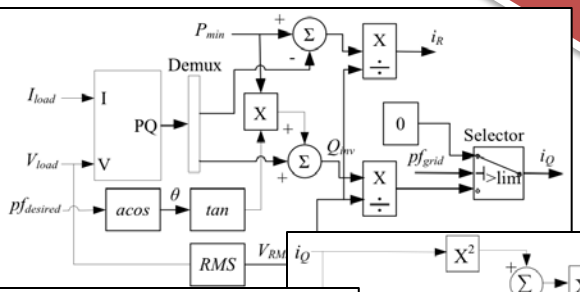

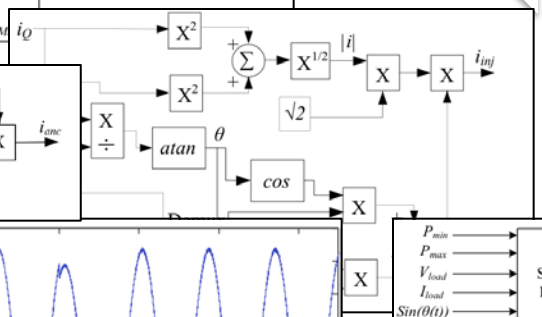

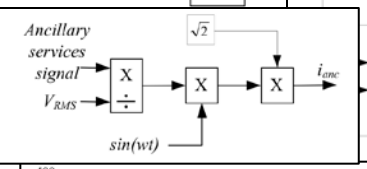

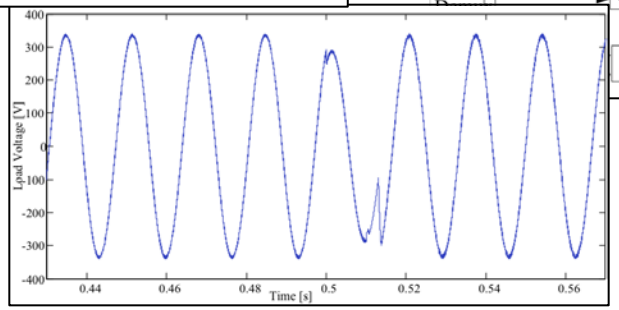

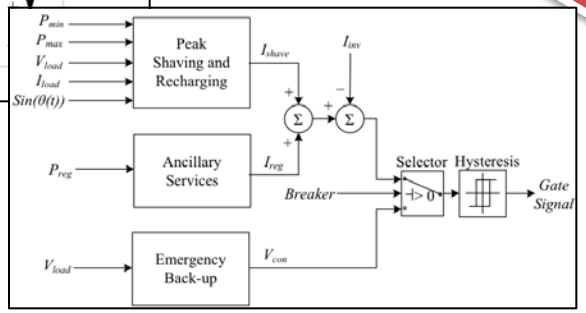

2013

Testing

Technical Approach:

Modeling and Control

- CES components utilized in modeling include:
  - ✓ Residential Load Data
  - ✓ Lithium Ion Battery Model
  - ✓ Power Electronics and Control

TABLE I
HOME DATA

Characteristic Info	House 1	House 2	House 3	Total
Energy Usage (kWh)	204.5	1095.8	253.1	1553.4
Maximum Demand (kW)	10.2	18.5	5.8	23.3
Average Demand (kW)	1.2	6.5	1.5	9.2
Load Factor	0.12	0.35	0.26	0.395

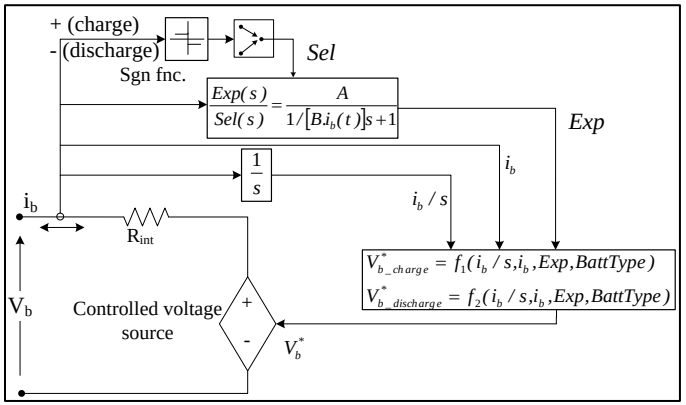

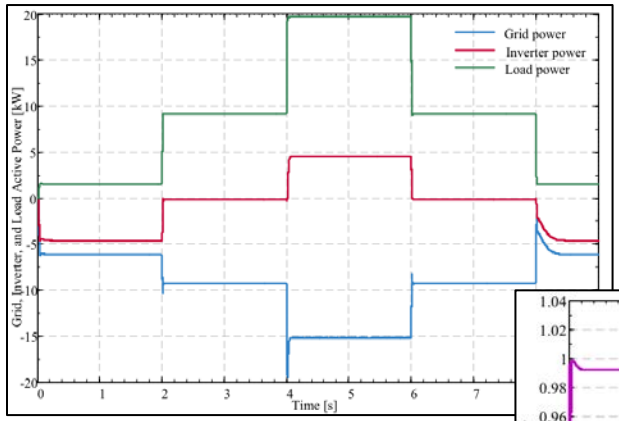

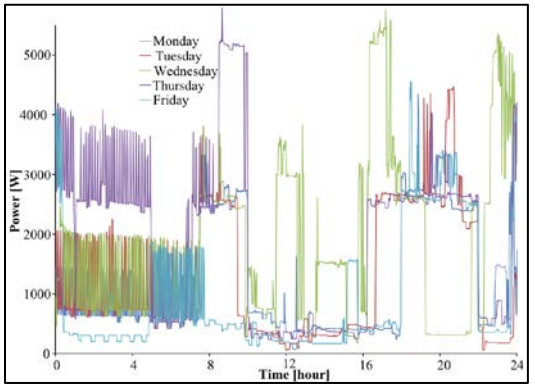

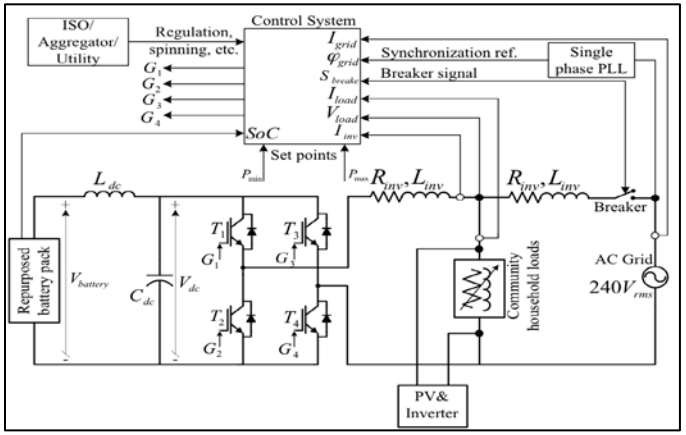

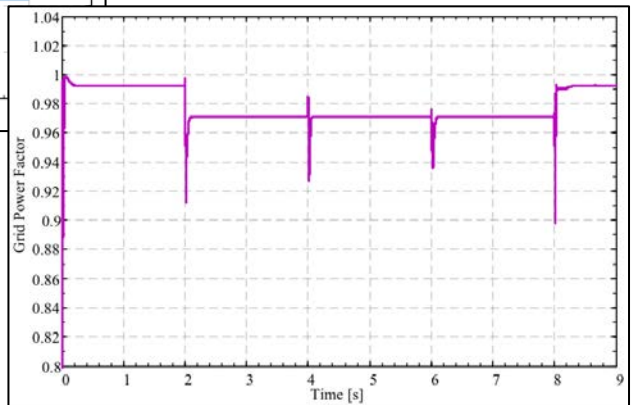

Technical Approach:

Testing

- ORNL is interconnecting CES to Oak Ridge National Laboratory distribution system.
  - ✓ Performing testing at DECC
  - ✓ Conducting grid service testing.

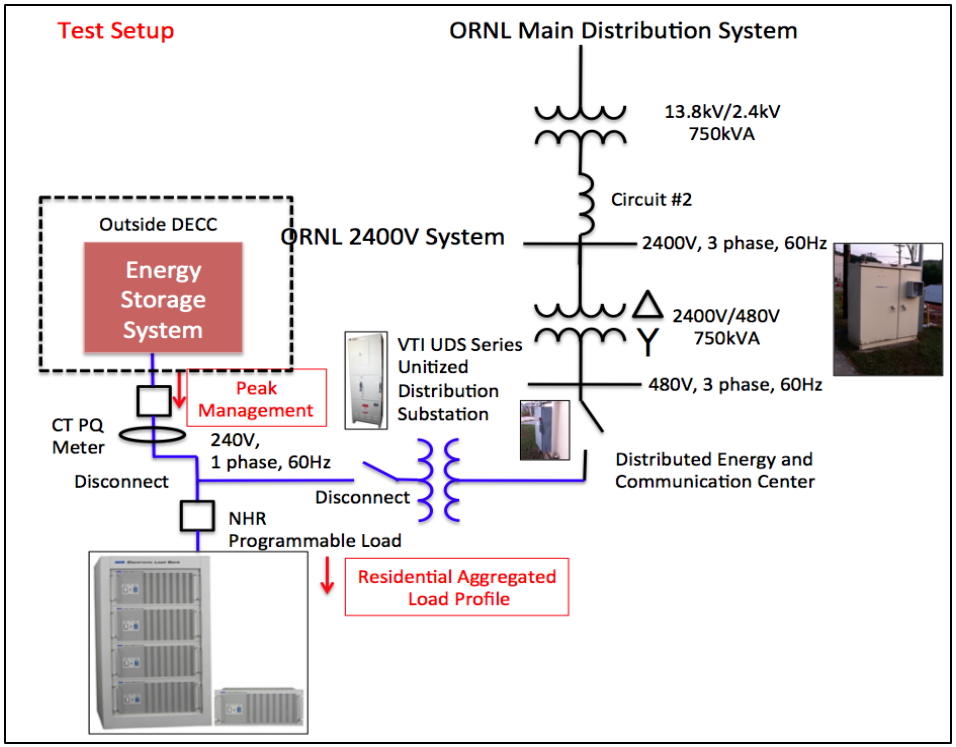

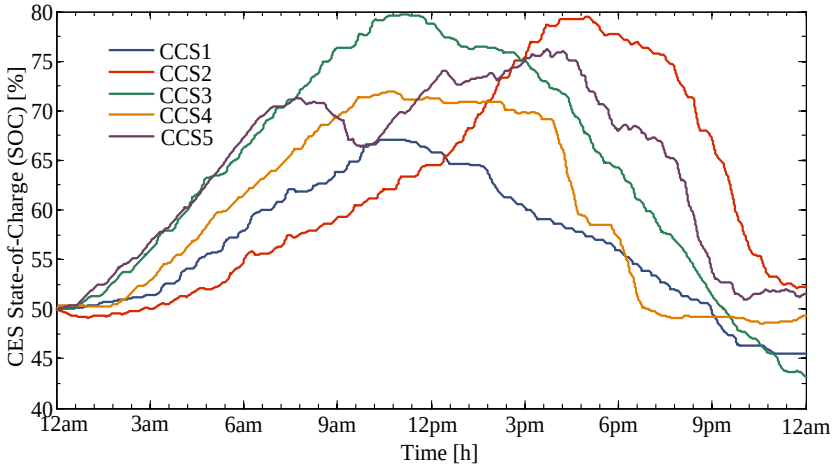

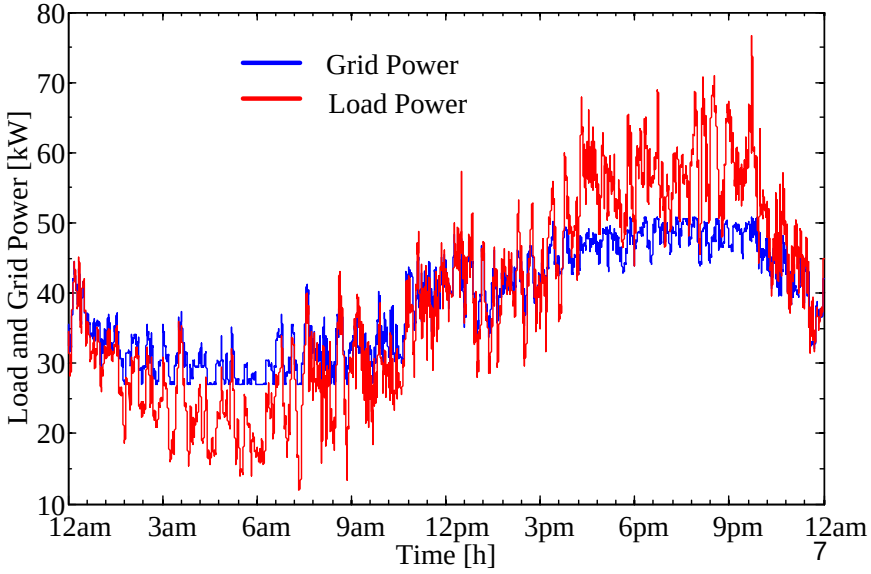

FY12 Progress & Milestones:

Milestone 1: Develop Testing Methodology

- Testing methodology developed and agreed upon by partners (March, 2012 – Completed)
- Developed control strategies in simulation. Control system implementation will be done on real hardware.

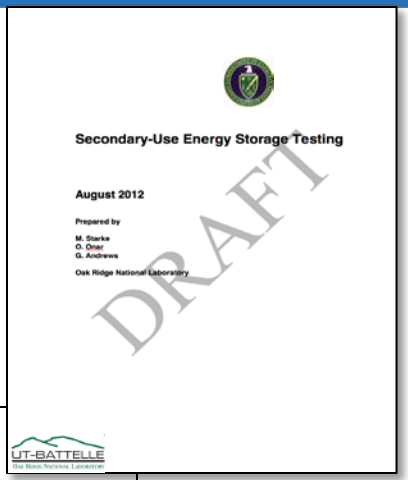

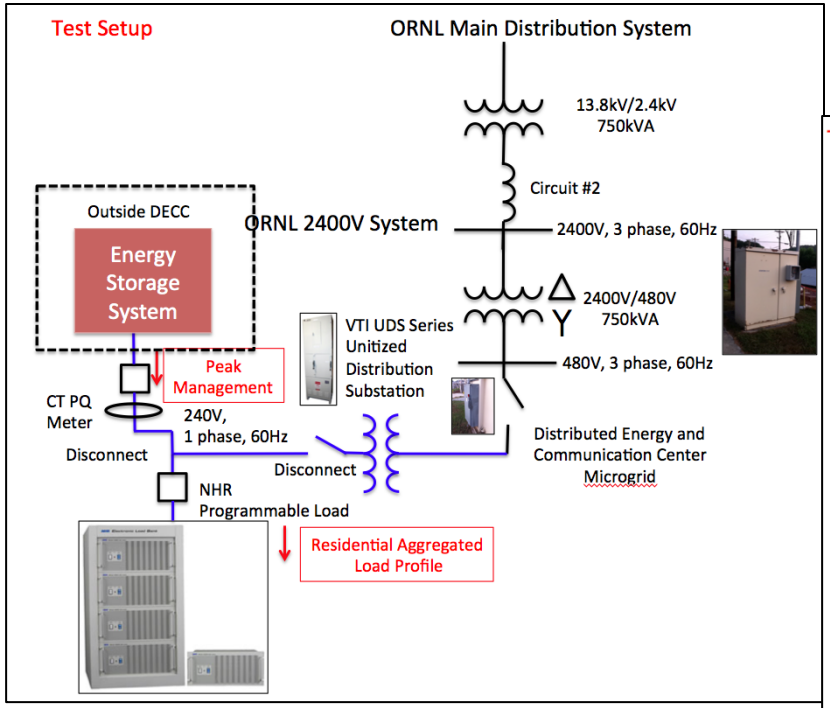

Peak management

Islanding mode

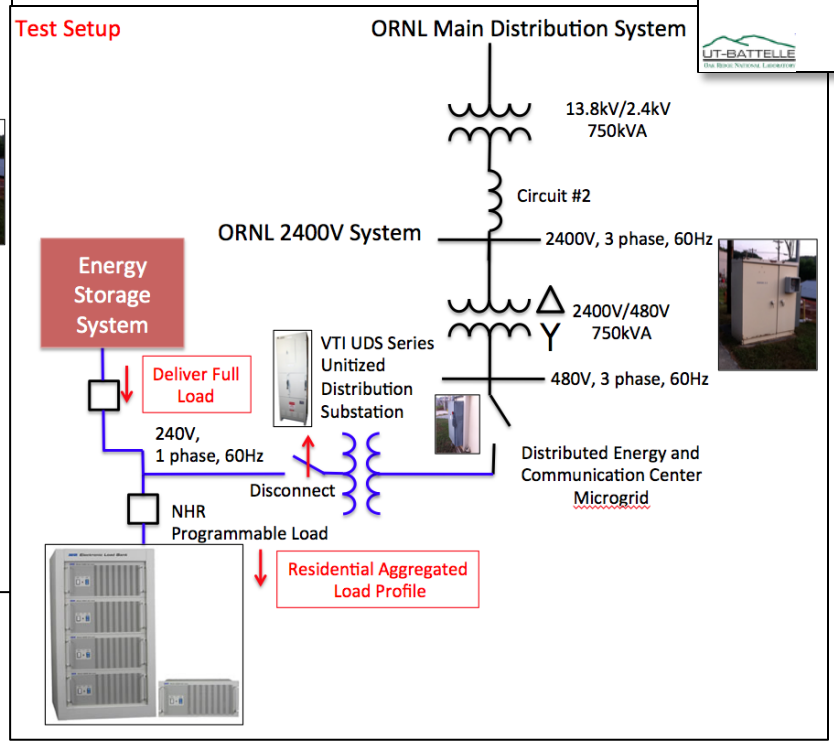

FY12 Progress & Milestones:

Milestone 2 & 3: Obtain and Install Equipment / Complete Testing

- Obtain and install secondary use energy storage system for testing.
  - CES unit (Battery and power electronics) – MTA signed with ABB, awaiting unit shipping,
  - Programmable AC load bank to emulate residential community load profiles – Procurement completed, unit received,
  - Interconnecting transformer – Order completed, awaiting delivery

- Testing to be completed for identified grid applications.
  - Ancillary services,
  - Energy management: Peak shaving / load shifting / renewable firming
  - Voltage support: Reactive power / Power factor correction,
  - Service reliability

Out-year Planned Progress & Milestones:

Complete Testing and Final Report

- Complete testing

  1) Complete installation of all equipment.
  2) Perform initial set-up checks.
  3) Conduct tests for different applications.

- Final report

  1) Collecting data and editing report based on NDA.
  1) Results evaluations, suggestions for impact of CES applications on secondary use lithium-ion batteries.

Contact Information

Speaker:
Omer C. Onar, PhD
Oak Ridge National Laboratory
Energy and Transportation Science Division
Phone: (865) 946-1351
E-mail: onaroc@ornl.gov

PoC:
Michael R. Starke, PhD
Oak Ridge National Laboratory
Power and Energy Systems
Energy & Transportation Science Division
Phone: (865) 241-2573
E-mail: starkemr@ornl.gov

PI:
Chaitanya K. Narula, PhD
Oak Ridge National Laboratory
Materials Science and Technology Division
Phone: (865) 574-8445
E-mail: narulack@ornl.gov

Program Manager:
George P. Andrews
Oak Ridge National Laboratory
Energy Storage Program
E-mail: andrewsgp@ornl.gov