Integration of Supercapacitor (UCAP) with STATCOM for Improved Distribution System Performance[1]

Subhashish Bhattacharya, Babak Parkhideh, Zhengping Xi, (Semiconductor Power Electronics Center, North Carolina State University, North Carolina, USA); sbhattacharya@ncsu.edu; Stanley Atcitty (Sandia National Laboratories)[2]

Abstract:

The STATCOM (Synchronous Static Compensator) based on Voltage Source Converter (VSC) is used for voltage regulation in transmission and distribution systems. In this paper, the integration and control of energy storage systems (ESSs), such as Supercapacitor (Ultracapacitor - UCAP) into a D-STATCOM (Distribution system STATCOM) with voltage controller is developed to enhance power quality and improve distribution system reliability. This paper develops the control concepts to charge/discharge the supercapacitor (UCAP) by the D-STATCOM, and validate the performance for an integrated D-STATCOM/UCAP system for improving distribution system performance under all types of system related disturbances and system faults. The potential performance improvements is verified for rapidly varying arc-furnace loads for voltage flicker mitigation by supplying fluctuating real power by the D-STATCOM/UCAP system.

I: Introduction:

In recent years, the STATCOM (Synchronous Static Compensator) based on voltage source converter (VSC) is used for voltage regulation in transmission and distribution systems. The STATCOM can rapidly supply dynamic VARs required during system disturbances and faults for voltage support [1-7]. However, strict requirements of STATCOM losses and total system loss penalty preclude the use of high frequency PWM (Pulse-Width Modulation) for VSC based STATCOM applications. This constraint of implementing VSC either without PWM or with low switching frequency PWM functionality (typically switching frequency < 500Hz or 1kHz), results in Voltage Source Converter (VSC) DC voltage dip and fluctuation and therefore, over-currents and trips of the STATCOM during and after system disturbances and faults, when its VAR support functionality is most required.

In this paper, the integration and control of energy storage systems (ESSs), such as SuperCapacitor [Ultracapacitor (UCAP)] into a D-STATCOM (Distribution system STATCOM) with voltage controller is developed to enhance power quality and improve distribution system reliability. This paper develops the control concepts to charge/discharge the UCAP by the D-STATCOM, and validate the performance for an integrated D-STATCOM/UCAP system for improving distribution system performance under all types of system related disturbances and faults. The potential performance improvements is verified for rapidly varying arc-furnace loads for voltage flicker mitigation by supplying fluctuating real power by the D-STATCOM/UCAP system.

In particular, the performance of the D-STATCOM/UCAP system is investigated in case of an arc furnace load connected to the system. The arc furnace loads require fluctuating real and reactive power in addition to the steady state real and reactive power. This fluctuating real and reactive power causes flicker in the voltage at the PCC (Point of Common Coupling). It is shown that with a D-STATCOM connected at the PCC with SuperCapacitor (UCAP) the fluctuating component of real and reactive power can be supplied by the D-STATCOM. The SuperCapacitor (UCAP) can supply fluctuating component of real power – this then leads to only steady state real power from the supply, and therefore mitigates the voltage flicker problem at PCC.

II: STATCOM Application for Distribution System:

The Figure 1 shows a typical 2-bus 12kV distribution system. A two-level VSC based STATCOM is connected with the system through a shunt coupling transformer to regulate the system bus voltage at the point of common coupling (PCC). The D-STATCOM VSC DC nominal bus voltage is 600V. A SuperCapacitor [Ultracapacitor (UCAP]] is integrated with DC capacitor [8], with its experimentally verified equivalent circuit characteristics. The Figure 2 shows the implemented angle controlled (α) STATCOM controller. An inner feedback loop is used to regulate the STATCON instantaneous reactive current Iq shunt. Note that this control is achieved by varying the phase angle, α, of the inverter output voltage relative to the distribution system PCC voltage. This technique makes it possible to maintain a constant maximum ratio between the inverter output voltage and the VSC dc-capacitor voltage (Vdc in Figure 1). The reference value for the reactive current control loop is generated by an outer loop responsible for the system voltage control (Vbus_ref). This outer control loop

[1] Funded in part by the Energy Storage Systems Program of the U.S. Department Of Energy (DOE/ESS) through Sandia National Laboratories (SNL)

[2] Sandia is a multi-program laboratory operated by Sandia Corporation, a Lockheed Martin Company, for the United States Department of Energy's National Nuclear Security Administration under contract DE-AC04-94AL85000.

is similar to that used in conventional static var compensators, and includes an adjustable slope/droop setting that defines the voltage error at full STATCON reactive output [9-10].

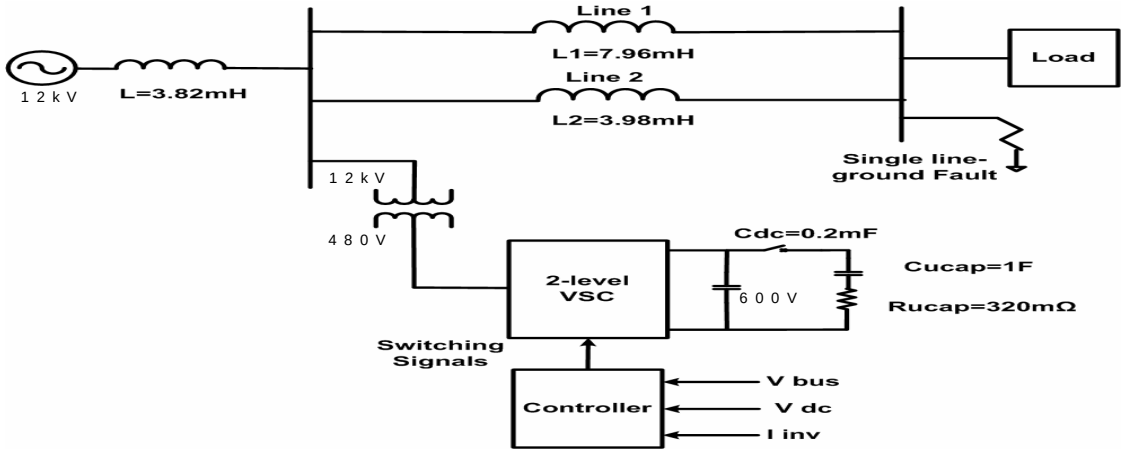

Figure 1: Distribution system with D-STATCOM integrated with supercapacitor (UCAP) and controller

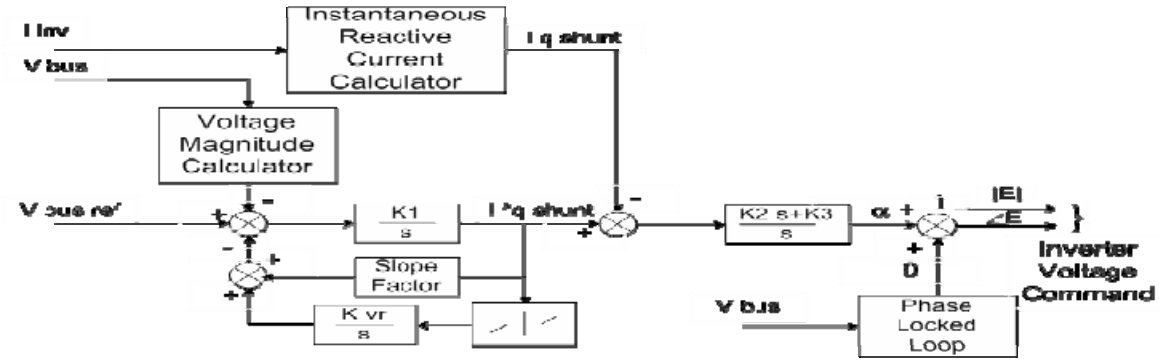

Figure 2. STATCOM controller block diagram

If there is a single-line to ground (SLG) fault in the distribution system, the D-STATCOM can not regulate Vpcc and VSC's DC bus voltage (Vdc). As a result, the D-STATCOM delivers I_d component of current (corresponding to the real power component) due to this DC bus voltage disturbance. This then limits the D-STATCOM reactive power rating and limits the reactive current Iq component. To reduce the effect of fault or Vpcc bus voltage disturbance on the D-STATCOM system operation, a larger value of DC capacitor may be utilized, but it still can not keep DC voltage constant during the fault (as shown by simulation results in the next section). This then provides the motivation for the research in this paper – to integrate SuperCapacitor (UCAP) with the D-STATCOM controller.

The Figure 3 shows the D-STATCOM controller integrated with SuperCapacitor (UCAP). In this controller, of the two STATCOM current components Id and Iq, the real current component Id regulates the DC bus voltage Vdc. The voltage control loop regulates Vpcc voltage magnitude by generating reference current Iq* for current control loop. Inside the voltage control loop, the inner current control loop regulates D-STATCOM reactive current Iq component.

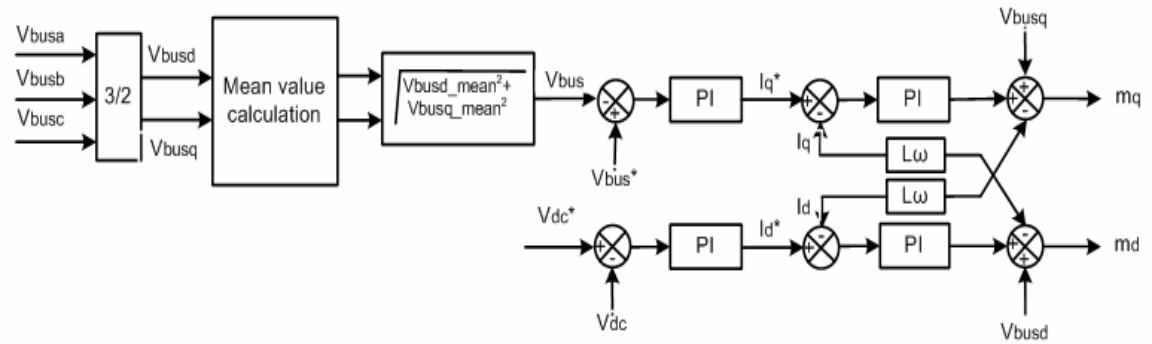

Figure 3. D-STATCOM controller integrated with SuperCapacitor (UCAP)

III: <u>Simulation results of the D-STATCOM Application for Distribution System:</u>

The Figure 4 shows results of D-STATCOM operation under normal system conditions. In this figure, the D-STATCOM mainly provides the currents for VSC operating converter losses – hence the current components are very small. It is seen that the Vpcc voltage, Id and Iq current components are regulated, and the DC voltage Vdc is kept constant.

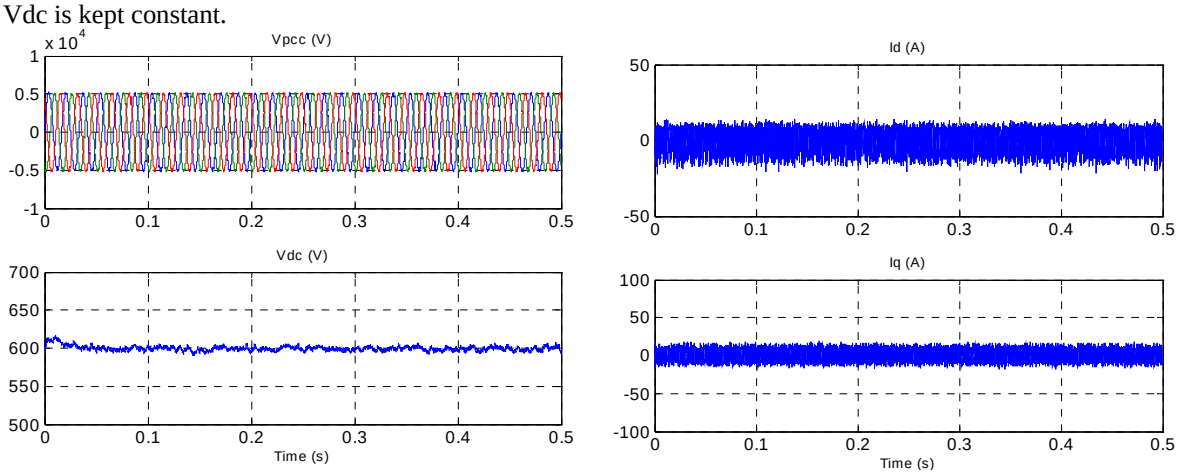

Figure 4. D-STATCOM operation under normal system conditions

The Figure 5 shows results of D-STATCOM operation under single-line to ground (SLG) fault conditions, where Cdc (DC capacitor) = 0.2mF. The Vpcc voltage dips due to a 6 cycle, 100ms SLG fault on phase A during the operation. As a result, the D-STATCOM is commanded to deliver reactive current Iq to regulate Vpcc - as shown in Figure 4, the reactive current Iq increases to around 50A. During the SLG fault, the DC bus voltage is not regulated and has ripple voltage – this requires the D-STATCOM to supply Id current component, which limits D-STATCOM reactive power/current rating during fault or system disturbances.

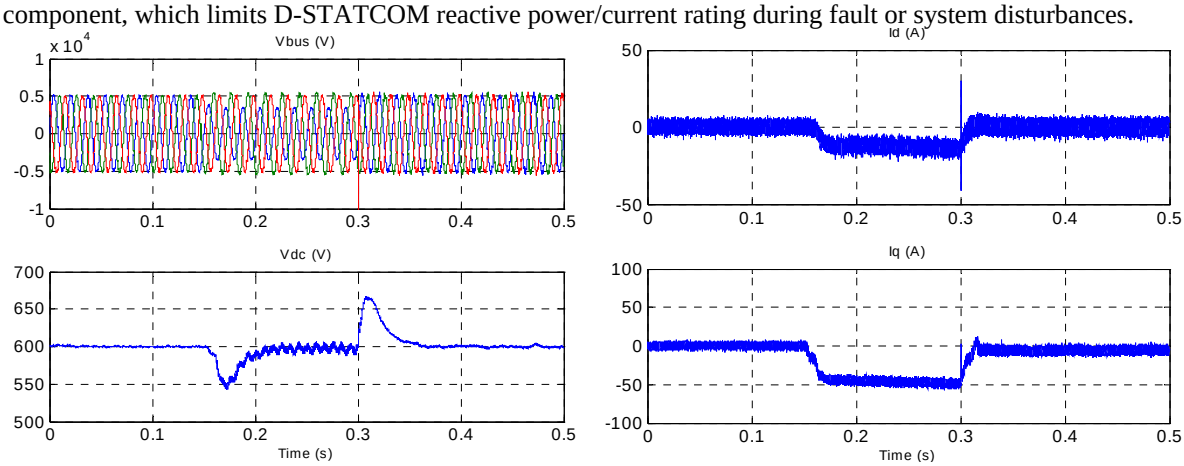

Figure 5. D-STATCOM operation under single-line to ground (SLG) fault with Cdc=0.2mF and no UCAP

The Figure 6 shows results of D-STATCOM operation under single-line to ground (SLG) fault conditions with 10 times the dc side capacitance of Cdc = 2mF, compared to the results in Figure 5. In this case also the dc bus voltage is not regulated and the D-STATCOM is required to supply Id current component.

The Figure 7 shows results of STATCOM integrated with Supercapacitor (UCAP) operation under single-line to ground (SLG) fault conditions (as shown in Figure 1). The Vpcc voltage dips during the fault and STATCOM delivers Iq current component to regulate Vpcc. The D-STATCOM DC bus voltage is well regulated by the D-STATCOM controller, and Id (real power current component) is kept almost zero with the UCAP. The STATCOM reactive power rating is therefore not limited with UCAP, and the D-STATCOM is tolerant to system faults in terms of rating.

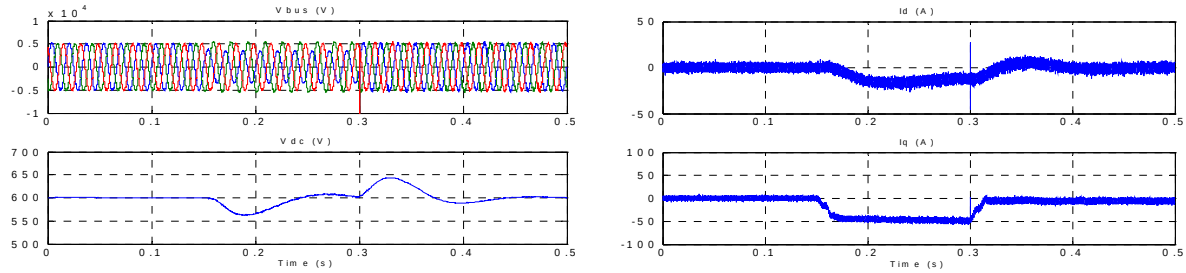

Figure 6. D-STATCOM operation under single-line to ground (SLG) fault with Cdc=2mF (10x) and no UCAP

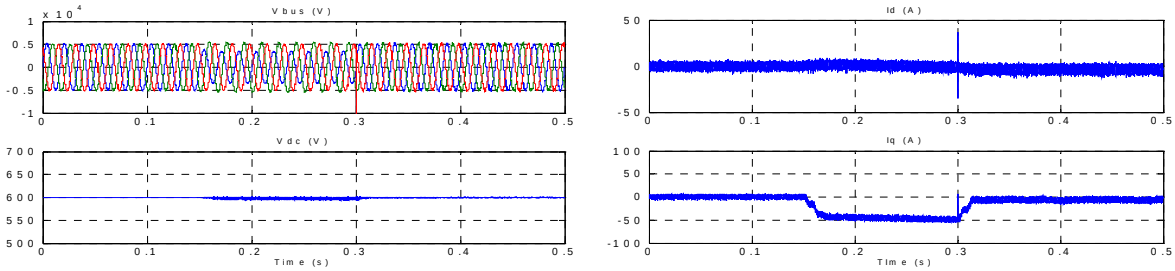

Figure 7. D-STATCOM integrated with Supercapacitor (UCAP) operation under SLG fault conditions

IV: D-STATCOM Application with Supercapacitor (UCAP) for Arc Furnace Application:

Arc furnaces present unbalanced and poor power factor loads for the electric utilities. The special characteristic of the load causes the voltage at the point of coupling (PCC) to fluctuate. The fluctuating system voltage has a negative impact on the power network and produces voltage flicker. On the other hand, it has been shown that this impact deteriorates the arc furnace performance too. Hence, there is a general interest in utilizing some sort of compensation both for the utility and the arc furnace plant sides. During the few past decades Static Var compensators (SVC) along with the fixed passive filters have been practiced at different sites. However, the performance of these conventional schemes is limited to providing some power factor correction and selective harmonics attenuation. These facts confirm the purpose of using compensation. Static Synchronous Compensator (STATCOM) is indeed a very practical competitive candidate to those conventional compensators. The STATCOM or generally the voltage source converter can respond more rapidly than SVC mainly because of the different semiconductor switches which are utilized. The common STATCOMs are known and used for reactive power compensation. However, active power fluctuations caused by arc furnaces change the angle of the bus voltage which contributes to; for instance voltage flicker at the PCC and fluctuating component or real power to be drawn from the supply. The conventional SVC or passive filters are unable to provide any portion of this fluctuating real power. If a STATCOM is desired to supply the fluctuating real power, it should be equipped with a high DC capacitance value and a fast controller for the VSC [11] – which are not cost-effective and also result in significantly higher VSC and system losses. This part of the paper presents the study on integrating a SuperCapacitor [Ultracapacitor (UCAP)] to a STATCOM for arc furnace flicker mitigation applications. The data used to model the arc furnace and the UCAP are drawn from an actual arc furnace field data and lab experiments (for UCAP modeling) respectively [8]. The Figure 8 shows the 3-phase arc furnace currents at 15kV bus voltage for a large rated (120 tones) arc furnace. As it is obvious this load consists of non sinusoidal currents which contribute to voltage flicker at PCC. The Figure 9 is the considered power system. In this figure, the two level VSC integrated with an UCAP is illustrated. In practice

the interface between the STATCOM and power system is realized with a transformer which here is shown as a simple *RL* circuit.

V: D-STATCOM Controller with Supercapacitor (UCAP) for Arc Furnace Application:

The objectives in the controller for arc furnace as it is clarified in the previous section are to provide the reactive power and fluctuating active power drawn from the load. In other word, the STATCOM is desired to supply a controlled source of apparent power with a largely varying three phase unbalanced currents as the commands. In controller design the practical limitations for the regulator parameters have been taken into account. The Figure 10 demonstrates the implementation of the vector controller for the STATCOM.

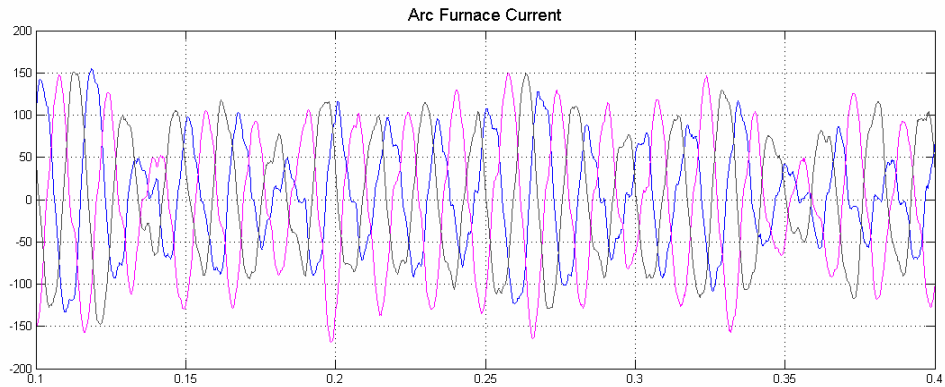

Figure 8 . Field data based 3-phase arc furnace currents

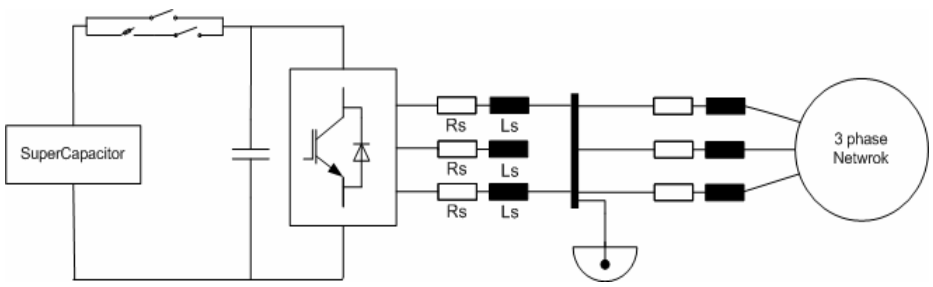

Figure 9 . Overview of the system with STATCOM and SuperCapacitor (such as UCAP)

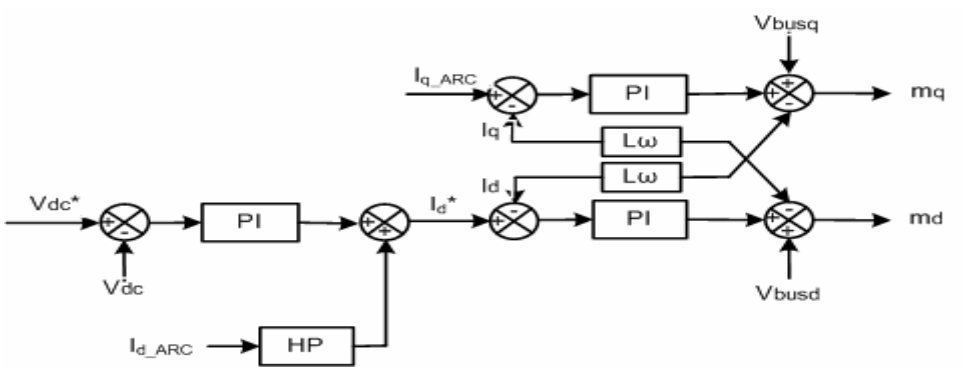

Figure 10 . Proposed controller for STATCOM/UCAP for arc furnace applications

VI: Simulation results of the D-STATCOM with Supercapacitor (UCAP) for Arc Furnace Application:

A. STATCOM without UltraCapacitor (UCAP)

The first part of the simulations is devoted to providing the results for STATCOM response to reactive and real power command while no UCAP is inserted. These results are shown in Figure 11 and Figure 12. The Figure 11 highlights the fact that the conventional STATCOM almost follows its reactive power reference. This can be explained with inherent decoupled controller design. However, the controller does not have appropriate bandwidth capability with the desired DC capacitor. So, the STATCOM can not supply the required real power, as shown in Figure 12.

B. STATCOM with UltraCapacitor (UCAP)

The performance of the STATCOM with UCAP like the previous subsection is shown in the following figures. The Figure 13 presents some critical values, *Vdc*, *Id* and *Iq*, response in the STATCOM controller. Currents for different parts in Figure indicate that currents drawn from the main are nearly sinusoidal.

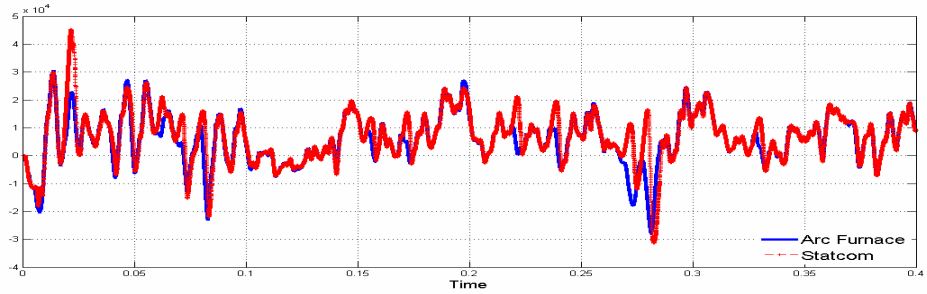

Figure 11. STATCOM without Supercapacitor (UCAP) response to reactive power command

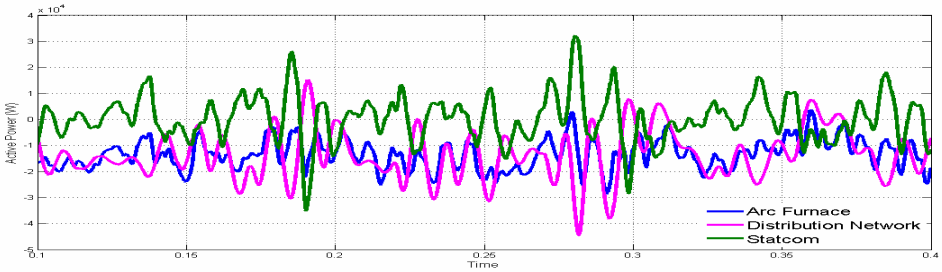

Figure 12 . STATCOM without Supercapacitor (UCAP) response to fluctuating active/real power command

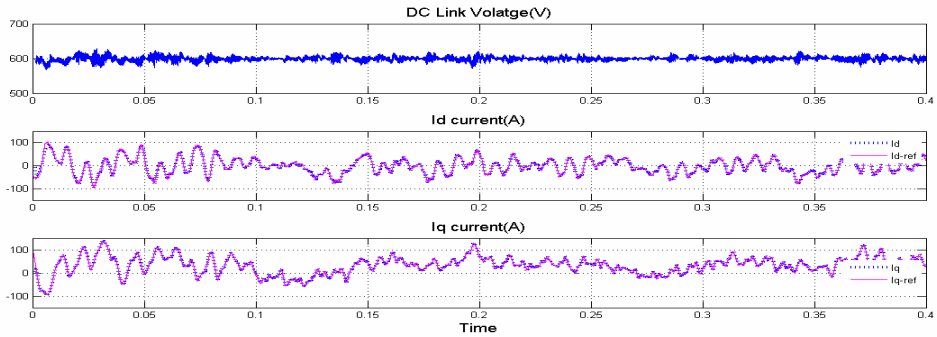

Figure 13 . Detailed Information out of STATCOM controller

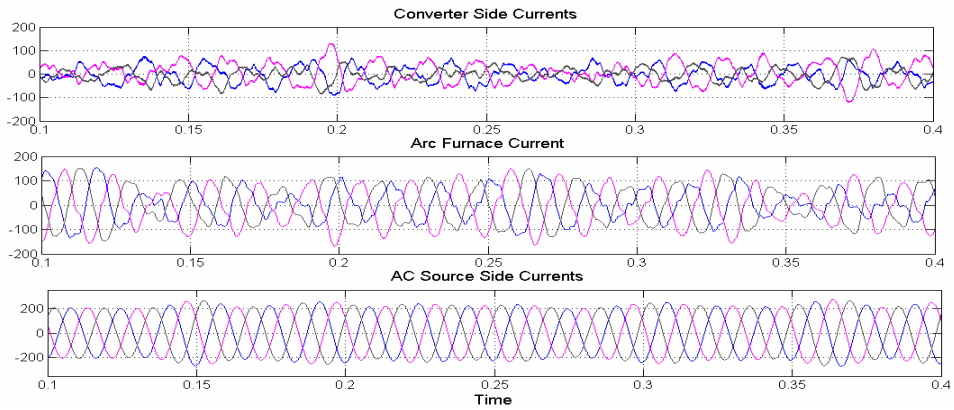

Figure 14 . System Currents – VSC currents, arc furnace (load) currents, ac supply current

As it could be expected from previous explanations and figure analysis, the STATCOM with UCAP can thus be made to supply those unbalanced varying currents. When these components are supplied by the STATCOM, they do not flow through the main supply network. The Figure 15 and Figure 16 illustrate the STATCOM performance of reactive and fluctuating active/real power compensations. The performance of the STATCOM for reactive power compensation is improved compared to the results shown in Figure 11. The fluctuating active/real power compensation is the major contribution of STATCOM integrated with UCAP, as shown in Figure 16. This feature distinguishes this configuration from common STATCOM and SVC.

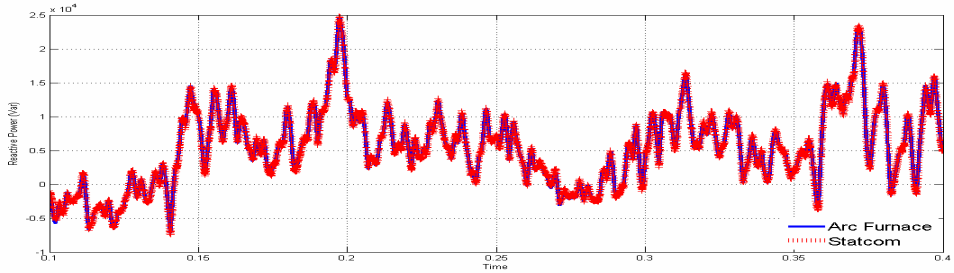

Figure 15 . STATCOM with Supercapacitor (UCAP) response to reactive power command

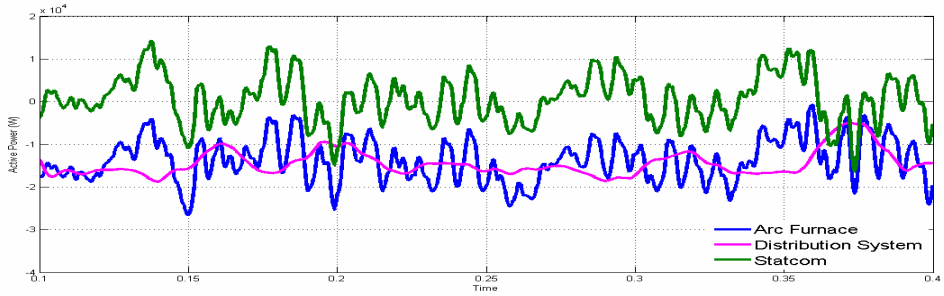

Figure 16 . STATCOM with Supercapacitor (UCAP) response to fluctuating active power command

VI: Conclusion

In this paper, the integration and control of energy storage systems (ESSs), such as SuperCapacitor [Ultracapacitor (UCAP)] into a D-STATCOM (Distribution system STATCOM) with voltage controller is developed to enhance power quality and improve distribution system reliability. This paper develops the control concepts to charge/discharge the UCAP by the D-STATCOM, and validate the performance for an integrated D-STATCOM/UCAP system for improving distribution system performance under all types of system related disturbances and faults. The potential performance improvements is verified for rapidly varying arc-furnace loads for voltage flicker mitigation by supplying fluctuating real power by the D-STATCOM/UCAP system. The STATCOM with supercapacitor (UCAP) is suited for distribution system voltage regulation and voltage sag mitigation. When there is fault in the system, as energy storage, supercapacitor can keep the DC voltage and

avoid over-current and even trips of STATCOM. The STATCOM with supercapacitor is also well suited for arc furnace voltage flicker mitigation. This feature is mainly due to the ability of this configuration to supply the fluctuating active/real power. The SuperCapacitor (UCAP) can supply fluctuating component of real power – this then leads to only steady state real power from the supply, and therefore mitigates the voltage flicker problem at PCC. Although the real power can be supplied by any sort of storage technology, supercapacitor (such as UCAP) is a practical solution in terms of the size and controller design. The performance of the STATCOM with supercapacitor especially for reactive power compensation is improved with the available VSC controllers. Consequently, regulated bus voltage allows the arc furnace to establish longer arcs and transfer higher real power (MW) from the supply.

VI: References

[1] N. G. Hingorani, "Power electronics in electric utilities: role of power electronics in future power systems," Proceedings of the IEEE, vol. 76, pp. 481, 1988.

[2] N. G. Hingorani and L. Gyugyi, Understanding FACTS: concepts and technology of flexible AC transmission systems: IEEE Press.

[3] L. Gyugyi, "Dynamic compensation of AC transmission lines by solid-state synchronous voltage sources," IEEE Transactions on Power Delivery, vol. 9, pp. 904, 1994.

[4] L. Gyugyi, "Reactive Power Generation and Control by Thyristor Circuits," IEEE Trans. Ind. Appl., vol. IA-15, no. 5, pp. 521-532, Sept./Oct., 1979.

[5] "Evaluation of Advanced Static VAR Generators," EPRI Report No. EL3397, May 1984.

[6] C.W. Edwards et al., "Advanced Static Var Generator Employing GTO Thyristors," IEEE, PES Winter Power Meeting, Paper No. 38WM109-1, 1988.

[7] L. Gyugyi et al. "Advanced Static Var Compensator Using Gate Turn-off Thyristors for Utility Applications," CIGRE 23-203, 1990.

[8] Chong Han, Huang, A.Q., Ding Li, Mamath, H., Ingram, M., Atcitty, S.. “Modeling and design of a transmission ultracapacitor (TUCAP) integrating modular voltage source converter with ultracapacitor energy storage,” 2006. APEC '06.

[9] C.D. Schauder and H. Mehta, "Vector Analysis and Control of Advanced Static Var Compensators," IEE Fifth International Conference on AC and DC Transmission, Conference Publication No. 345, pp 266-272, 1991.

[10] J. B. Ekanayake and N. Jenkins, "Mathematical models of a three-level advanced static VAr compensator," Generation, Transmission and Distribution, IEE Proceedings-, vol. 144, pp. 201, 1997.

[11] C. Schauder, “STATCOM for Compensation of Large Electric Arc Furnace Installations,” IEEE Power Engr. Society SM, 1999.