U.S. Coast Guard National Distress System Generator And Battery Performance Optimization Using The ACONF Charge Control Device[1]

Garth P. Corey (Sandia National Laboratories, Albuquerque, New Mexico, USA) gpcorey@sandia.gov); John Stevens (Sandia National Laboratories) [2]

The U.S. Coast Guard (USCG) operates more than 20 remote radio repeater sites known as the National Distress System (NDS). The sites are located on mountain tops along the Alaskan coast and operate continuously to support maritime activities in the area by relaying emergency radio distress calls requesting Coast Guard assistance. Electric power at each site is supplied by propane generators, PV arrays, and valve-regulated lead-acid batteries. Because of their remote locations, transporting supplies and maintenance personnel to the sites is a costly proposition. Consequently, in 2005 the DOE ESS Program and SNL began working with the Coast Guard to optimize system operation by minimizing fuel consumption and maximizing battery life.

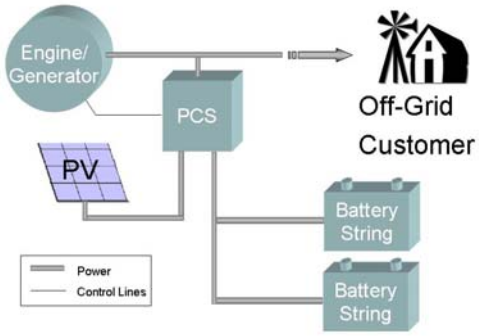

Traditionally, a tradeoff exists between optimal generator use and best battery management practices. Generators work best when they are running at full load and work worst when they are idling. To fully recharge a battery requires a 'finish charging' period, characterized by poor charge acceptance, where the generator is running at less than full load. Because of the fuel/battery tradeoff many system operators choose to skip the finish charging period, which reduces fuel consumption and generator use at the expense of battery life.

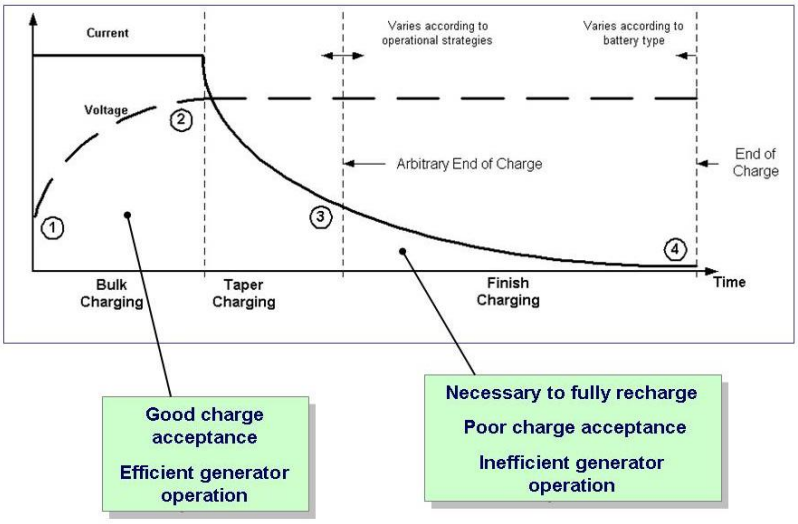

The alternative configurations (ACONF) device provides a method for ensuring that industry standard battery management procedures are performed at the intervals recommended by the battery manufacturer without compromising overall system performance and while allowing (in the case of complete discharge) battery

[1] Funded by the U.S. Coast Guard and the Energy Storage Systems Program of the U.S. Department of Energy (DOE/ESS) through Sandia National Laboratories (SNL)

[2] Sandia is a multi-program laboratory operated by Sandia Corporation, a Lockheed Martin Company, for the United States Department of Energy's National Nuclear Security Administration under contract DE-AC04-94AL85000.

power to remain available to the load, if necessary. The ACONF technology[3] is based on specially developed hardware and proprietary software. It manages the charge/discharge of multi-string batteries in electric systems that include a storage battery comprising at least two parallel-connected battery strings. The ACONF software allows a battery string (or multiple strings in systems with more than two strings in parallel) to provide the power to finish charge another battery string and power the load. In other words, the ACONF 'decouples' the process of finish charging the battery from the operation of the generator. Consequently, the generator does not have to be used for long-duration, low-power finish charging, which results in much more efficient generator use. The ACONF technology ensures that batteries receive frequent and complete finish charging. The device also monitors the batteries' state of health and collects, stores, and transmits data that monitors daily operations.

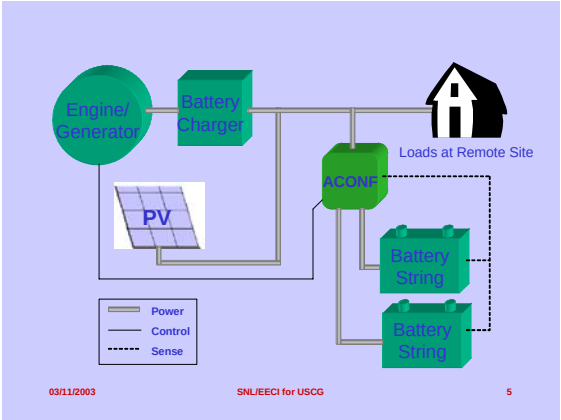

In late 2003, the USCG accepted a proposal from the Distributed Energy Technology Laboratory (DETL) at SNL to evaluate and quantify the expected increase in performance of an NDS power system using 10-kW-class ACONF technology. The study compared the performance results of two identical NDS power systems, one operated in its original configuration and the second operated using a 10-kW class ACONF unit. Final assembly and acceptance testing of the two power systems was completed at the DETL in March, 2004. At that time, both systems were commissioned and placed in a continuous cycling regime that mimicked the operation of the systems at the current operational NDS sites. Simulations for winter, spring, and summer conditions were run. The simulations compared propane consumption and energy (in kWh) delivered to the load for the two systems. During the second half of the test program, system PV use (for battery charging) was optimized, which reduced the number of generator starts for the ACONF-equipped system. Nevertheless, the ACONF-equipped system's generator still started 17% more often than the standard system, but the generator run time was reduced by approximately 38%. The total average fuel savings for the entire test program was nearly 25%—10% above the originally projected savings. Details of the complete test program can be found in the SAND Report *Final Report on Testing of ACONF Technology for the US Coast Guard National Distress Systems*, which was published in August 2005.

[3] Development of the ACONF technology was funded by the U.S. Department of Energy through the Energy Storage Systems Program at Sandia National Laboratories.

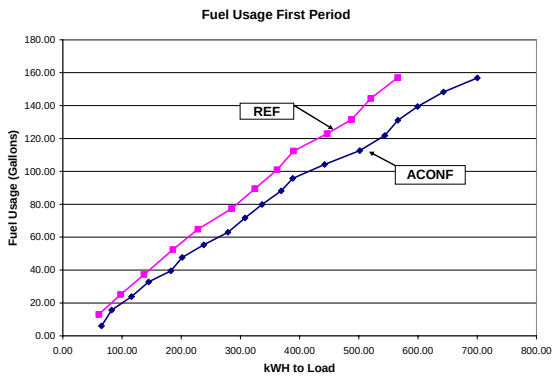

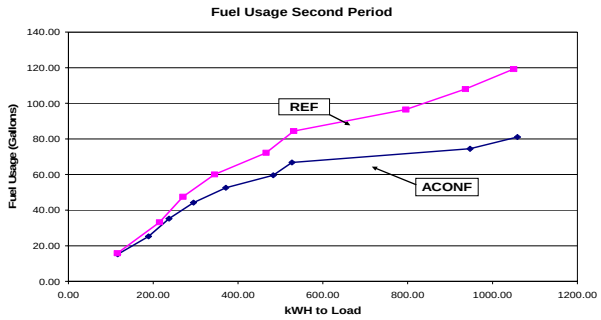

Following successful completion of the laboratory testing, a field test that compared a system equipped with a 10-kW class ACONF device to a standard system configuration began in November 2005 at an NDS site in Duke Island, Alaska. The ACONF system has been operational at the Duke Island site since installation in late 2005. In February, 2006, the site went off-line, presumably as the result of a lightning strike that damaged several components of the power system. The ACONF device survived the lightning strike; but the communications link was not immediately restored. An SNL representative visited the site shortly after the system failure (and the subsequent restart) and verified that the ACONF was functioning properly, except for the communications link. Nevertheless, analysis of an alternate data source indicated that the ACONF was functioning as designed and data indicated that all was well on the site until early fall 2006, when indications from this alternative data source appeared to convey that one of the battery strings had substantially reduced storage capacity. It is speculated that the replacement of two cells in one string during a routine preventative maintenance visit was at fault for the reduced capacity because the other string, which did not have any cells replaced, continued to perform as expected under the management of the ACONF device.

An analysis was made of the data that was manually downloaded during the site visit made after the restart. The analysis indicated that all was well with both the power system and the ACONF device up to the point of the lightning strike that took the system off line. Indeed, the data indicated that, up to the time of the February power system failure, the state of health (SOH) of both battery strings was improving and that the start/stop sequencing of the propane generators had resulted in shorter run times for the generators. Both the improved battery SOH and the shorter generator run times indicate the effectiveness of the advanced controller. Additionally, it was noted that the low-voltage-shutoff of the strings during normal operations was increasing slightly, which indicates that, after removing the allocated charge per cycle (50% depth of discharge), the cutoff occurred with the battery string at a higher state of charge than for previous cycles. Based on the results of this field test, in late summer 2006, the Coast Guard decided to expand the use of the ACONF to other NDS sites and ordered nine upgraded ACONF units for future installations. In August 2007 the Duke Island site was restored to its original configuration, including replacing the aging batteries.

The original units of ACONF were DOS-based. Because

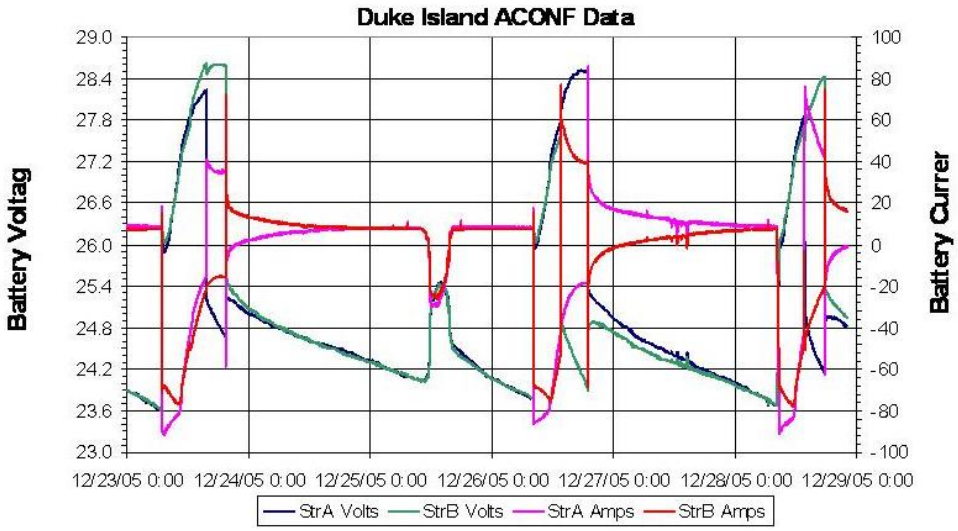

substantial shortcomings of the DOS-based operating system, a decision was made to upgrade the control PC for the devices, including the installation of a more flexible and powerful Linux-based operating system. Additionally, the programming language used to code the ACONF software will be translated from Visual C to Visual BASIC. Other upgrades include improving device communications to allow secure, bi-directional communication from password-protected laptops so that NDS operations can be monitored and controlled from ground stations and a more operator-friendly interface. Mechanical hardening was also specified in the requested upgrades to avoid damage during shipping and handling operations that was noted in the original ACONF hardware. The hardware and software upgrades are currently in process as are a User's Guide and an Operations and Maintenance Manual for the units.