Vanadium Redox-flow Battery for Voltage Sag

Tsuyoshi Shinzato, Katsuji Emura, Katsuya Yamanishi, Hiroshige Deguchi,
Shinichi Miyake, Takushi Hara, Kenshi Suzuki[1]

Abstract

Sumitomo Electric Industries, Ltd. has developed a vanadium redox-flow battery (VRB) system for voltage-sag. The system is constructed of units of VRBs and converters similar to the conventional Uninterruptible Power Supply (UPS), providing 3MW for power for 1.5 seconds. In addition, the system operates in load-leveling (LL) mode everyday, providing 1.5MW for 1 hour.

One of the special features of the system is that its VRB cell has the capability to discharge twice or several times the rated output power for several seconds. The system has 36 units of VRB cell-stacks to achieve rated output power in LL-mode operation, but it provides twice the power instantaneously.

The system started its cyclic operation in LL-mode since April 2001, compensating over 20 times of voltage-sag mainly caused by thunderbolts to power distribution. Records show that some of the voltage-sag are deeper in voltage dip and longer in duration than tolerable conditions.

1. Introduction

Since 1985, Sumitomo Electric Industries has developed redox-flow batteries for large-scale energy storage in collaboration with Kansai Electric Power Co.

A long-term test in which the VRB systems are connected to actual systems has been carried out and their performance has been verified by Sumitomo Electric Industries and Kansai Electric Power Co. VRB is now available for practical use. Although the initial target for VRB development was a large capacity system that could be used to substitute the conventional pumped storage power station, VRB has shown that it can be used for a variety of applications. By utilizing the features of the VRB, the VRB can be an effective system not only for conventional load leveling applications but also for voltage sag compensation.

2. Principle and features of VRB

2-1. Operation Principle

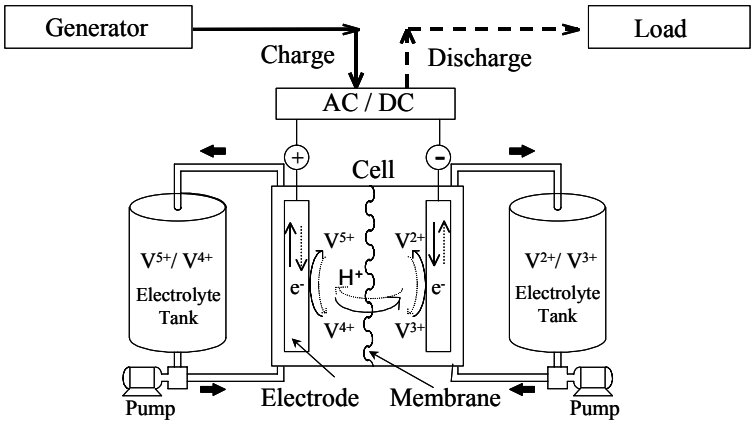

Figure 1. Principle of VRB

As shown in Figure 1, a VRB is comprised of a battery cell section where the battery reaction takes place,

[1] Sumitomo Electric Industries, Ltd., Osaka, Japan. Email: shinzato-tsuyoshi@sei.co.jp

positive and negative tanks containing electrolyte, and a pump and piping for circulation the electrolyte from the tanks to the cell. The VEB is connected to an AC system via an AC/DC converter. A solution containing vanadium ions is used as the positive and negative electrolytes which are stored in respective tanks and circulate to the battery cells. The reactions that occur in the battery cell during charging and discharging can be expressed by the following equations:

Positive electrode: $V^{4+} \rightleftharpoons V^{5+} + e^-$

Negative electrode: $V^{3+} + e^- \rightleftharpoons V^{2+}$

2-2. Features

a) Long Life:

The reaction mechanism is simple and the recharging-discharging cycle life is extremely long. The 20kW system was operated for about 2 years, and operational testing was conducted up to 13,342 charge/discharge cycles (1).

b) Fast Response:

To experimentally confirm the VRB instantaneous responsiveness, the load and direct current power source were prepared. The applied electronic load was a step current with a rise time of approximately 350μs. The VRB's responsiveness was faster than the load transition time (350ms) and the charge/discharge current change transition was able to follow the load (2).

c) Overload capacity:

The relationship obtained by the experiments of the 1kW VRB system between the battery's direct current output and continuous output time. The battery's short-period maximum high rate factor was measured as 4.6 for SOC 90%, 3.9 for SOC 50% and 2.9 for SOC 10% (2).

d) Others:

The output section (cells) and storage sections (tanks) are independent of each other, making it easier to design the output and storage sections according to the constraints on the installed layout by enabling, for example, only tanks to be installed underground. Also the VRB operates at room temperature and there is no emission of CO_2 and the electrolyte is recyclable making the VRB environment-friendly

3. Application to a Voltage Sag Compensation System

In facilities such as semiconductor manufacturing plants, voltage sags can cause substantial damage such as defective half-finished products and business opportunity losses associated with equipment recovery. Protection against such damage requires instantaneous high-rate output performance and a peak shaving function can also be provided if required. In 2001, Sumitomo Electric Industries delivered a VRB system for use as a voltage sag compensating system in a semiconductor plant.

3-1. System Specification

The specifications of the delivered VRB system are shown in Table 1 and the external appearance of the equipment is shown in Figure 2.

Table 1. System Specification for a Semiconductor Manufacturing Plant

Parameter	Specification	
Voltage Sag Compensation	AC Output	3,000 kW
	Discharge Time	1.5 seconds
Load Leveling	Rated AC Output	1,500 kW
	Rated Discharge Capacity	1,500 kWh
AC Terminal Voltage		6,600 V

Figure 2. External appearance of the equipment of the system

The operation sequence is shown in Figure 2. The system charges and discharges everyday for peak shaving of 1.5MW and helps reduce electricity cost by utilizing inexpensive nighttime electric power. Whenever a voltage sag occurs, the battery can deliver the equivalent of twice its rated output i.e. 3MW, for 1.5 seconds with negligible delay.

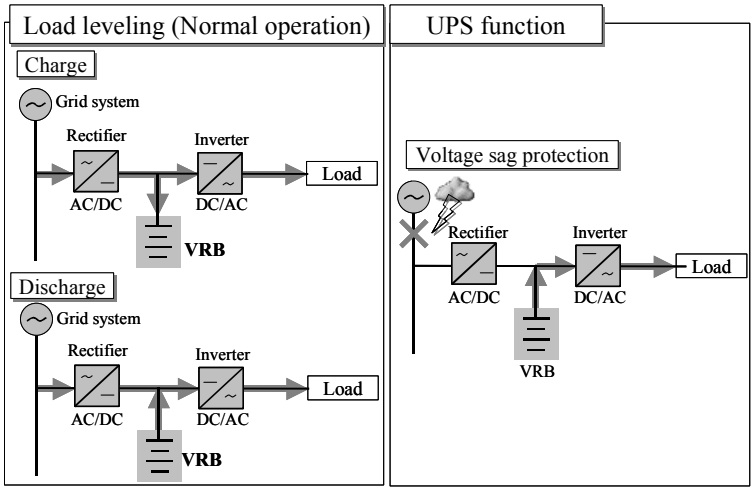

Figure 2. Operation Sequence

Figure 3 shows the test result of voltage sag protection by the VRB. When Voltage sag occurs, the VRB can discharge to the load for 1.5 seconds with negligible delay.

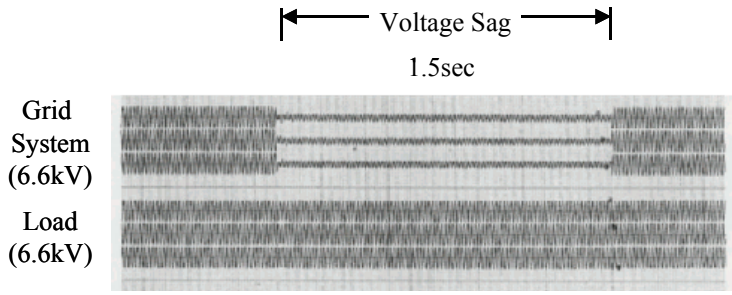

Figure 3. The test result of voltage sag protection

3-2. Operating results

The system started cyclic operation in LL-mode since April 2001, compensating over 20 times of voltage sag mainly caused by thunderbolts to power distribution. Figure 4 shows the records of voltage sag. Records show that some of the voltage-sag are deeper in voltage dip and longer in duration than tolerable conditions and the manufacture line might stop without the VRB.

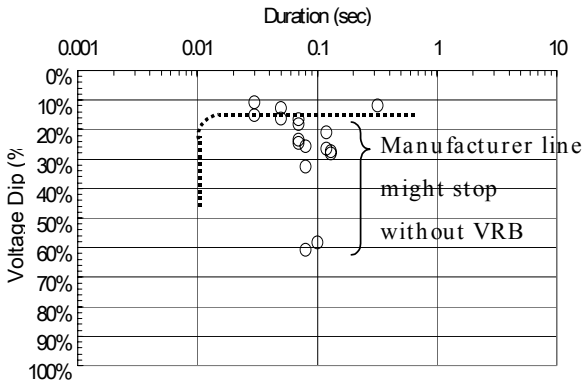

Figure 4. Records of voltage sag compensated by VRB system.

4. Conclusion

As a result of environmental problems and deregulation of the electric power industry, a variety of distributed power sources will be introduced into future electric power systems. It is expected that electric power storage technology will become a key technology in electric power system for ensuring supply reliability and maintaining power quality. The VRB has unique characteristics not seen in other batteries and it is believed that these characteristics can be utilized in a wide variety of applications in addition to the application discussed in this paper.

5. References

[1] Deguchi, N. Tokuda, T. Kanno, K. Motoi, T. Kuamamoto, T. Itoh, S. Ogino, T. Shigematsu and T. Hara, “Development of a 450kW Vanadium Redox Flow Battery System”, 33rd Intersociety Engineering Conference of Energy Conversion, 1998.

[2] T. Kaizuka and T. Sasaki, “Evaluation of Control Maintaining Electric Power Quality by Use of Rechargeable Battery System”, IEEE Power engineering Society Winter Meeting, 2000.