Enhancing The Transient Loadability Of Distributed Generation Using Electro-Chemical Capacitor Based Energy Storage System

Satish J. Ranade[1] — Nancy Clark, Stan Atcitty, John Boyes[2]

Abstract: If Distributed Energy Resources (DER) are to achieve their true potential in terms of economic and reliability benefits, it is essential that these technologies have the ability to operate when isolated from the utility. Isolated operation is compromised by the inability of many DER to handle transient loads, such as excessive currents drawn by motors during the starting phase. This paper proposes an electro-chemical, capacitor-based, energy storage system to improve transient loadability. The capacitor is interfaced to the DER terminals using a simple, short-term rated, dc-ac inverter. At the onset of a large transient load current, the capacitor supplies the excess current needed, thus augmenting the capability of the DER. The basic scheme and sizing considerations are discussed. The performance of the scheme is examined through simulations studies involving the startup of 10-40 HP motors from an isolated 75 kW DER. These studies provide a proof of concept, as well as a means to develop specifications for the capacitor and inverter. Future work will involve design optimization and the development of a prototype.

1. Introduction

Distributed energy resources (DER) consist of an energy source (photovoltaic, wind, natural gas) and a power conversion interface, such as an electronic power conversion system (PCS), generator, etc. [Ref. 1,2]. Typically less than a megawatt in size, DER are intended to be connected to electric utility distribution systems. DER can provide economic and power quality benefits. They also have a reliability value if they can operate individually, or as an island, upon loss of the electric utility source.

Isolated or islanded DER often cannot handle transient loads such as excessive currents drawn by motors during the starting phase. The PCS that serves as the interface to utility distribution and loads has an inherent current limit. If the current exceeds PCS capability, the PCS will trip or reduce its output voltage, depending on design. In either case, service to the load is compromised.

This paper proposes an energy storage system to improve transient loadability of DERs. As shown in Figure 1, an electro-chemical capacitor is interfaced to the DER terminals using a simple, short-term rated, dc-ac inverter. At the onset of a large transient load current, the capacitor supplies the excess current needed, thus augmenting the capability of the DER. Electro-chemical capacitors are particularly suited to this application because of their high specific energy and power, as well as ability to operate over a wide temperature range

This paper presents a feasibility study of the proposed approach. The Alternative Transients Program (ATP) was used to implement a model for the system. Simulation studies were used to explore device operation and sizing considerations. These studies suggest that the concept is feasible and useful in augmenting DER capability. It is noted that the series resistance of commercially available electro-chemical capacitors is a critical parameter in this application. Cost effective application will require a better understanding of electro-chemical capacitor behavior and optimization of the design. Future research will aim at optimizing the design and developing a laboratory prototype.

---

[1] New Mexico State University, Las Cruces, NM. Email: sranade@nmsu.edu
This work is funded by the Department of Energy and managed by Sandia National Laboratories, Albuquerque, NM
[2] Sandia National Laboratories, Albuquerque, NM.

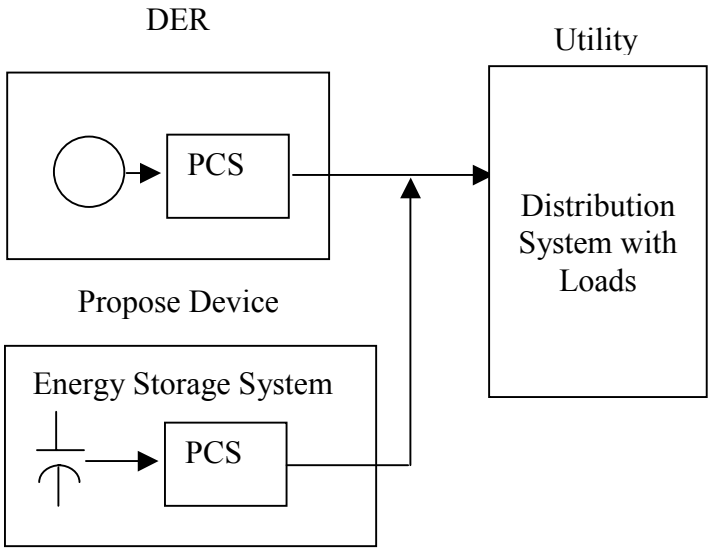

Figure 1. Proposed Device To Improve the Transient Loadability of a DER

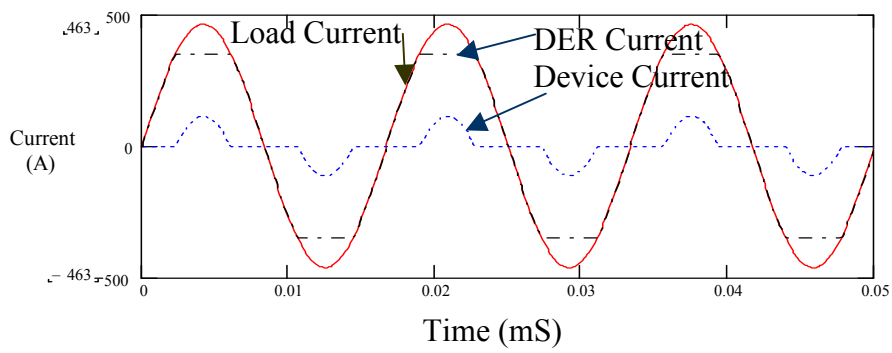

Figure 2. DER Current, Load Current, and Current from the Proposed Device. Under over-current conditions the device supplies pulsed current to support the DER and prevent it from exceeding current limits.

2. Background

Most DERs supply energy through an electronic PCS with very little over-current capacity. For example, a 75 KVA, three-phase, 208/120 V micro-turbine system has a rated current of 208 A (rms). The PCS in such a system would usually be designed to handle roughly 250 A (rms). On the other hand, suppose the load contains a 10 HP motor with a normal current of 28 A. As a rule of thumb, when this motor is started, it draws six times rated current, or 166 A. It can be seen that if the DER had a reasonable amount of load to begin with, the motor starting current would easily overload the DER.

A PCS can be designed to reduce output voltage in an effort to reduce current. Such a PCS would exhibit significant voltage sag as the motor starts. Other designs may simply disconnect the PCS. If an island contains several DERs, the tripping of one compromises the entire island. There are several standard approaches [Ref. 3, 4] to handling transient loading such as motor starts; namely, switched capacitors, isolation of critical loads using uninterruptible power supplies, and power quality devices with energy storage.

In the context of islanded DERs, switched capacitors only provide a partial solution. The capacitor can only supply the reactive part of the starting current needed. Uninterruptible power supplies protect the critical load and can also reduce DER load to some extent. However, energy storage-based power quality devices appear to be a more appropriate solution. The solution investigated herein falls in this category.

3. Simulation Model

The test system used to study the feasibility of the proposal is illustrated in Figure 3. A 75 KVA, 120/208 V micro-turbine type DER supplies a load, which includes an induction motor, through a 208-480 V transformer. An electrochemical capacitor is interfaced to the turbine through a simple inverter. The basic idea is that if the micro-turbine approaches its current limit during motor start, the capacitor will supply pulses of current to keep the turbine within its limit, thus maintaining system voltage.

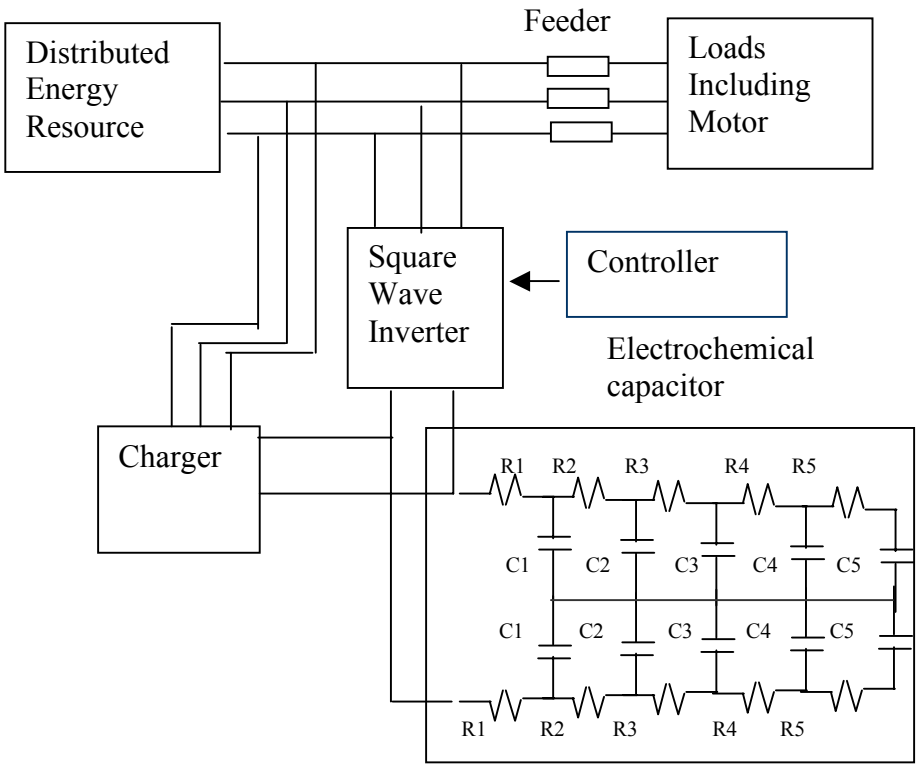

Figure 3. Simulation Model Components

A simulation model was developed using the "Alternative Transients Program," which is used extensively in power system simulation studies. Parameters for the capacitor model were supplied by Dr. John Miller [Ref. 5].

3. Considerations in Capacitor Sizing

Sizing the capacitor based on commercially available technology involves the selection of cells or modules to be connected in series/parallel to meet the required voltage and energy rating. In a 208/120 V, three-phase system, the intrinsic voltage at a dc bus is 294 V. Because of capacitor ESR, the capacitor voltage has to be somewhat larger.

Suppose we wish to start a 40 HP[3] motor from a 75 KW, three-phase, 208/120 V DER. The starting current for a motor this size is expected to be between 500-800 A rms, with a power factor of 0.6 lagging. As such, the real component of the current is 300-480 A and the reactive component is 400-640 A. The starting energy is typically in the order of 100 KJ.

Consider an electrochemical capacitor rated at 13V, 239 F, with effective series resistance at 0.006 ohms. Suppose 'm' modules are connected in series to deliver a 1000 A pulse.

[3] The motor size may appear excessive for a single DER; but it is appropriate for a cluster.

At the beginning of a discharge, the terminal voltage, Vt, of the capacitor is the initial charge voltage, say 13 V, less the voltage drop across the series resistance. This terminal voltage should initially exceed 294 V. As a motor starts, its current decays, as does the capacitor voltage. Thus,

$$Vt = 13\ m - 1000*m*0.006 = m\ (13-6) = 294\ V$$

Solving for m, a minimum of 42 modules is needed. The series connection of 42 modules would have a maximum voltage rating of 546 V. The corresponding effective capacitance is 239/42 = 5.97 F.

Suppose the capacitor is allowed to discharge from 564 V to 450 V as the motor accelerates. Ideally, the energy released is

$$E = 0.5 * 5.97\ (564^2 - 450^2) = 345.3\ kJ,$$

which is considerably in excess of the 100 KJ desired. However, note that there is also a considerable loss in the resistance associated with the capacitor. The resistance of 42 series-connected modules with resistance of 0.006 ohms each is 0.25 ohm. If a 1000 A discharge were sustained for one second, the loss is 250 kJ. Thus the 42 series-connected modules would suffice.

As a general rule, commercially available asymmetric, electro-chemical capacitors are available only in a narrow range of resistance and capacitance values. Lower resistance capacitors have a larger capacitance. Lower resistance would bring the advantage of lower voltage ratings. The corresponding larger capacitance brings a larger size penalty as well as increased charging requirements. Optimization of these variables was not attempted in this limited study.

4. Simulation Study

In the simulation study, the electrochemical capacitor is first charged to a desired dc bus voltage. The DER is also initialized to normal operating voltage. The load is such that the initial DER current is 70 A rms, which is roughly 33% of full load. A 40 HP motor is switched on at one sec (1000 ms).

Figure 4 shows the rms terminal phase-voltage at the DER for three scenarios. In scenario one, the energy storage system is not used. In scenario two, the energy storage system is used with dc bus voltage set at 400 V; while in scenario three the voltage is set to 600 V. It is seen that, without the proposed scheme (scenario one), the terminal voltage drops from 120 V rms per phase, to 80 V. With this voltage sag the motor, in fact, does not start. When the proposed scheme is operated at an initial dc bus voltage of 400 V (scenario two), the voltage drops only to 110 V; the motor, however, accelerates very slowly. With an initial dc bus voltage of 600 V, (scenario three) the voltage is essentially unaffected, because the capacitor supplies the requisite excess current. This establishes the validity of the proposed scheme.

Figures 5 and 6 display the currents supplied by the DER, the energy storage system, and the current drawn by the motor when the dc bus voltage is set to 600 V. *The DER current plot has been deliberately inverted to provide clarity.* As the motor accelerates, the motor current is initially close to 800 A peak and decays rapidly towards normal current in 0.4 sec,. The energy storage system initially supplies 550 A peak current; this current also decays as the motor accelerates and draws less current. The DER current is maintained within limits, thus the DER voltage does not collapse.

Simulation studies were conducted with several different values of dc bus voltage, corresponding capacitor designs, and motor sizes.

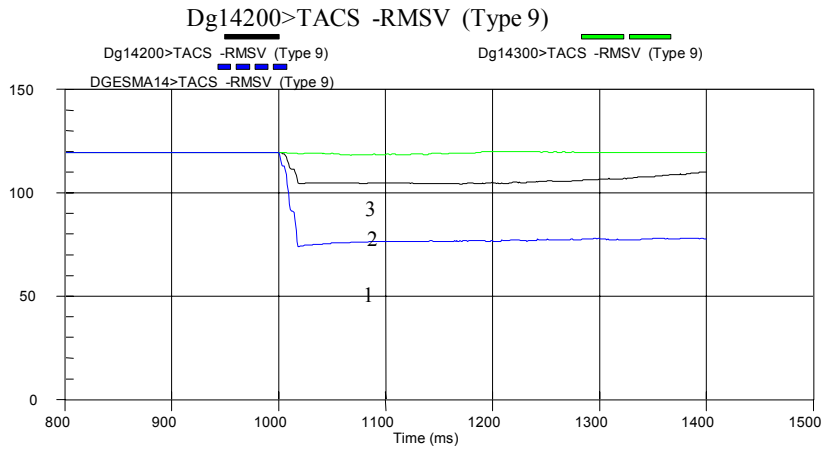

Figure 4. DER Terminal voltage during motor start: 1-Without Capacitor Support; 2- With Capacitor Initially Charged to 400 V; 3- With Capacitor Initially Charged to 600 V.

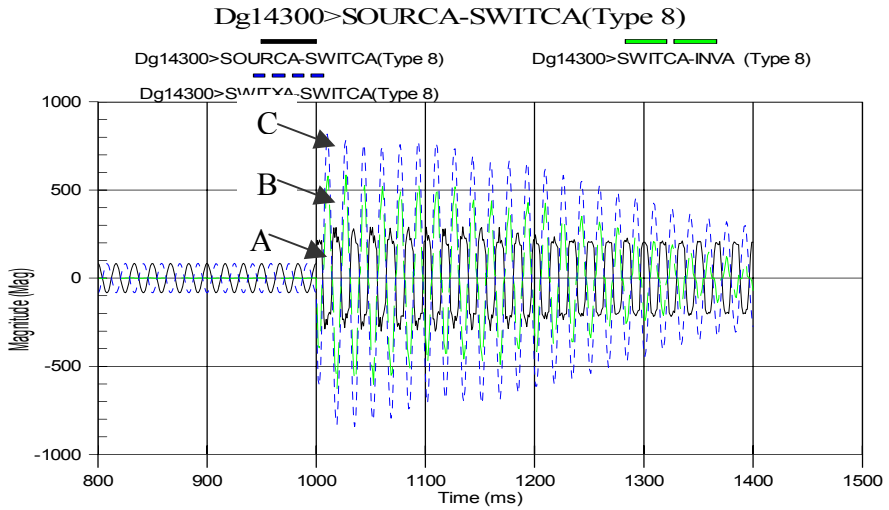

Figure 5. Currents in the DER(A), Energy Storage System(B), and Motor(C);dc Bus Voltage =600 V

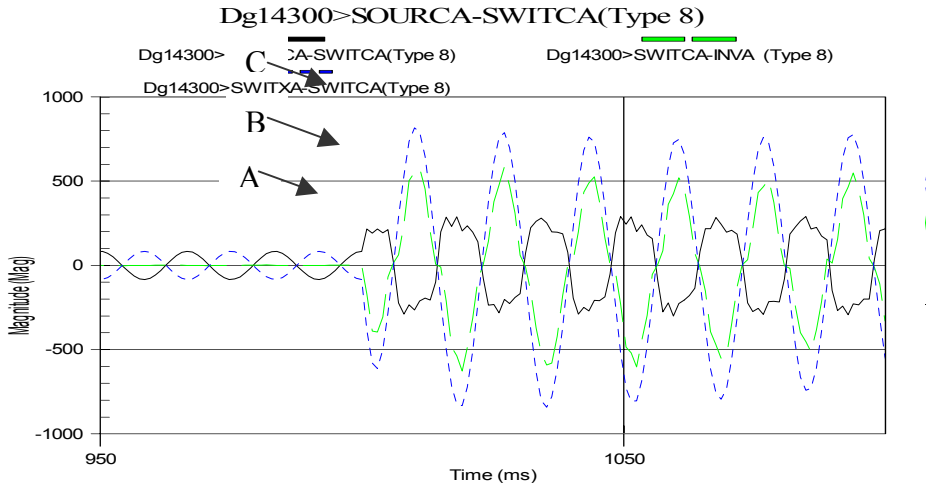

Figure 6. Exploded View of Currents in the DER (A), Energy Storage System (B), and Motor (C); dc Bus Voltage =600 V

Here is a summary of the observations from these simulations:

- The principal limiting factor in the design is the equivalent series resistance of the capacitor.
- For commercially available capacitors, smaller series resistance is associated with larger capacitance.
- The series resistance and capacitance of electrochemical capacitors are dependent on technology. A 600 V or higher capacitor, with resistance between 0.1 and 0.3 ohm, provides excellent performance. However, the rated capacitance ranges from five to almost 30 F, which is substantially in excess of what is needed. It is estimated that 0.5-1 F would be sufficient.
- The 600 V dc bus requirement has important implications. Suppose the PCS is designed using Insulated Gate Bipolar Transistors (IGBT). The 600 V bus drives the design into 1200 V IGBT technology and substantially higher cost.

5. Conclusions

This paper has described a simple, electrochemical capacitor-based system that can be used to assist DER in handling large short-term loads such as motor starts. The advantages of the proposed approach over conventional, power-quality device type solutions are:

- The proposed device can be integrated into the DER, and
- The device design and control scheme is extremely simple; thus, it is anticipated that the device can be made quite economical

The technical feasibility of the concept has been established through simulation studies. Continuing work involves economic feasibility studies and prototype development. As noted in the paper, the use of commercially available technologies requires a larger capacitor than needed in order to limit ESR. We believe further optimization will permit more appropriate and economical sizing.

6. References

[1] Sweet, W., " Networking Assets (Will distributed generation pan out as a panacea?)", IEEE Spectrum, January 2001

[2] Willis, H.L., "Energy Storage Opportunities Related to Distributed Generation", IEEE PES Summer Meeting, Seattle, WA, July 2000, pp.1517-1518.

[3] Zhan, C., Barnes, N, Ramachandramurthy, V., Jenkins, N., "Dynamic Voltage Restorer with Battery Energy storage for Voltage Dip Mitigation", Eighth International Conference on Power Electronics and Variable Speed Drives, London, UK, September 2000, pp. 360-365.

[4] Arnold, R., " Solutions to the Power Quality Problem", Power Engineering Journal, Vol. 15, Issue 2, April 2001, pp. 65-73.

[5] John Miller, Private Communication.

[6] Ranade S., Clark, N., Atcitty, S., Boyes, J., "Enhancing the Transient Loadability of Distributed Generation Using Electro-chemical Capacitor Based Energy Storage System", Draft Final Report, Sandia National Laboratories, Sept. 2001.

Sandia National Laboratories is a multiprogram laboratory operated by Sandia Corporation, a Lockheed Martin Company, for the United States Department of Energy under contract DE-AC04-94AL85000