A National Initiative to Characterize Transmission Power Quality

Steven G. Whisenant
Duke Power Company
P. O. Box 1006, M/C EC04J
Charlotte, NC 28201-1006
Sgwhisen@duke-energy.com

ABSTRACT

During the past several summers, major transmission disturbances have raised concerns about the reliability of the transmission network. Also, restructuring of the industry has raised questions about the perceived deterioration of transmission and distribution systems. However, no comprehensive data exists to substantiate or refute such perceptions. A project has been designed to measure and characterize the quality of power delivered by the transmission grid in a defined region of the United States.

The project termed Transmission Power Quality (TPQ) is designed to provide a statistically valid database of monitored data that can be used to develop a baseline characterization of the quality of electric power delivered by a transmission network.

This project was funded in part by the DOE Energy Storage Systems Program.

INTRODUCTION

The United States is moving rapidly towards restructuring of the electric utility industry. Generation, transmission and distribution are breaking apart and regional organizations are being established to operate transmission systems. In 1996, a disturbance in the western part of the grid led to a major power outage. In 1999, blackouts and brownouts occurred in the mid-Atlantic states. Therefore, much attention has been placed on the reliability of the transmission network. The Federal Energy Regulatory Commission is concerned over what is perceived as a deterioration in reliability of the national grid. An even greater concern is that major industry in the U.S. is served directly from the network and is therefore very vulnerable to disturbances that originate from the grid itself.

Very little is known about the quality of electric power delivered by the grid. Network models simulate stability, but they are not able to characterize other Power Quality events that are very disruptive to complex and sensitive industrial customers with complex manufacturing processes

TPQ is designed to assess the quality of power delivered by the transmission grid in a 13 state region. Approximately 300 power quality monitors will be strategically located to provide a statistically valid database which will then be used to characterize the quality of delivered power.

A comprehensive methodology has been developed to collect and analyze the data to ensure its statistical validity. Data from this project will provide a power quality baseline for a major part of the integrated transmission network in the Southeastern United States.

PROJECT BACKGROUND

Currently within the United States, about half of the states have adopted rules for the unbundling of electric utilities into separate generation, transmission and distribution functions. Generation is opening to competition and the market will establish prices and supply. Distribution is left to be a state regulated monopoly while transmission is being placed under the management of newly established independent system operators and soon to become regional transmission organizations (RTOs) regulated by the Federal Energy Regulatory Commission (FERC).

Even before restructuring began, two major outages occurred in the western grid system in the summer of 1996 that caused concern about the reliability and stability of the national transmission system.[1] In the summer of 1998 during a short term heat wave, wholesale electrical prices surged to levels that left some marketers and brokers

bankrupt. Then last summer local blackouts and brownouts occurred sporadically in New England, New York, Chicago and the mid-Atlantic and south-central states. [1]

The obvious pressing question is whether the emerging independent grid operators have the capability and authority to guarantee reliable delivery of electric power. Also, given the anticipated increase in demand following restructuring, can those organizations leverage the resources of generation and transmission to serve the extra anticipated load? These questions are currently being left to FERC and other regional reliability councils to resolve, but an even greater question exists to the major industrial and commercial complexes in the U.S. how can they be assured that the quality of the electric power delivered will meet their needs on a continual basis, not just during one day or one week during the summer peak?

High quality, reliable electric power fuels today's economy. All industrial and commercial businesses depend first on an available and reliable supply of electric energy, but just as important is the quality of that power. The quality must meet the requirements of the machines and highly complex industrial processes. Today a voltage disturbance of a very minor nature for only a few milliseconds can shut down an entire industrial complex resulting in several $100,000 of losses and restart costs. Many continuous processes can never makeup the lost production caused by poor power quality and lose it to a competitor in the marketplace. Estimates have placed costs to U.S. industry alone caused by poor power quality in the range of $13.3 to 25.6 billion annually[2]. As a result, economic impacts of poor power quality are approaching 10% of the total retail costs of electric energy sold annually in the U.S. A similar study in South Africa places losses at approximately 12% of the total retail costs of electric power delivered annually.

The point is that the quality of power is highly critical to industry and business. A significant portion of large industry is supplied electric power from direct connections to transmission networks. Studies from Intel[3], Champion Paper[4], and Georgia-Pacific[5] have implicated the transmission system as the cause of costly manufacturing shutdowns. In each of these cases, the problem originated from a voltage sag or line outage on the transmission network supplying the plant. When these problems occur, the optimum solution can only be found after a thorough investigation of the transmission system to determine the source of the problem. Also utilities are now being asked to execute premium power contracts with large industrials in an effort to ensure high quality, reliable power. In January 1995 the Detroit Edison Company entered into "Special Manufacturing Contracts" with the big three auto manufacturers. Under these contracts, the customers are guaranteed minimum levels of power quality. Initially these contracts only covered supply interruptions but after a year's monitoring program, they now include voltage sag penalties for not meeting the contract targets and can exceed $100,000 per event in some cases.

Very little is known about the quality of the power supplied by the transmission grid. No credible data exists which describes the quality of power delivered by a large transmission network. In 1995, EPRI concluded a project which measured the quality of electric power supplied by distribution systems in the U.S.[6] This project, simply called Distribution Power Quality (DPQ) provided a wealth of information regarding disturbances such as supply interruptions, sags, transients, and harmonics on the distribution system, but it provided no insight into the performance of transmission system. DPQ did not distinguish whether events originated on the distribution or transmission systems. In addition, factors that influence the quality of power on the transmission system are very different from those on distribution systems.

A collaborative effort is under way to capture data in order to characterize the quality of electric power delivered by a large regional transmission network. This project termed Transmission Power Quality or TPQ is being sponsored by the Office of Power Delivery in the Department of Energy. The Southeastern Electric Exchange is serving as project facilitator in which 20 utilities in a 13 state southeast region and EPRI have been invited to actively participate in the project.

The study will select 300 transmission delivery sites to be monitored over a 24-month period. These sites will be statistically selected in order to provide data that will effectively characterize all transmission delivery points within the region. The final report is scheduled for September 2003.

PROJECT OBJECTIVE

The TPQ Study is designed to assess the quality of power delivered by the transmission grid in a 13 state region of the Southeastern United States over a two-year period. An initial team of utility representatives, Sandia National

Labs, EPRI and the Southeastern Electric Exchange developed a preliminary study report which outlines the project justification, basic methodology, cost information and schedule. The overall objective is to monitor delivery points such that a statistically valid database is established which characterizes the quality of electric power delivered by the network. This database will be transferred to Sandia for analysis, characterization and reporting.

PROJECT SCOPE

Participating utilities are to procure, install, operate and maintain the monitors. Each utility will collect data on a daily basis and transfer the information to a central server managed by EPRI. EPRI will sanitize the data by removing utility affiliation with data streams. The data will be initially processed and sent to Sandia for further analysis. SEE is serving as facilitator for the project by recruiting participants, hosting project review meetings and workshops and assisting in report development.

The Department of Energy is providing funding for the project in conjunction with cost sharing from industry. The initial estimate for the life of the project is $7,302,508. Industry is being asked to fund the project on a 1:1 ratio with DOE. It is anticipated that certain components may already be in place which will aid each utility in their cost sharing. Such components include current and potential transformers at monitoring points, workstations, phone lines, and existing labor resources to operate and maintain the monitors. Several utilities have already begun to install monitors of the type required and some of these sites may be selected by the random sampling process.

In summary, TPQ is a large and complex project spanning four years. Many individuals from numerous organizations will be required to work together each meeting 100% of their commitment in order for this project to achieve its objectives.

PROJECT JUSTIFICATION

Five significant factors justify this project of which any one can stand as a sole reason to support this effort. However, collectively they bring more value to the project of collecting a valid database to represent the quality of grid power.

Utilities and energy service providers are called upon to address the service quality needs of their customers. The larger more critical and more sensitive customers are served by direct connections to transmission networks. Also directly connected are local distribution companies, co-ops and municipalities. A credible database will assist in addressing these customer's power quality issues. Since DPQ data is not applicable to the transmission system, valid performance data is required for supply contracts, premium power options, equipment specifications and determining power conditioning requirements. In the case studies referenced earlier, one to two years of monitoring data had to be collected in order to characterize the delivery quality to determine the source of customer problems. A statistically valid database could be used to approximate the service quality of large customers.

There is no question that new demands are being placed on transmission systems. As these demands continued to rise, there are concerns that the reliability and capability of these networks will deteriorate. Some perceive that deregulation of utilities is causing reliability to suffer. Most of those claims are based on isolated events or are just perceptions not based on facts. Developing a credible baseline of performance through the TPQ Project will provide the basis for comparisons in the future. FERC and other reliability councils will have real data to substantiate or refute calms about the deterioration of transmission networks.

Sandia National Labs operates the Energy Storage System (ESS) Program under contract from DOE. The mission of the ESS Program is to perform research that develops advanced energy storage systems which will enhance the reliability and power quality delivered to customers through transmission and distribution systems. In order to meet this objective, the ESS Program required performance data from the transmission system. Data on the magnitude and duration of disturbances will be used to specify design criteria of ESS products. Without this system performance data, ESS have to speculate on design characteristics for their research and development into storage systems.

The Transmission Reliability Program also funded by DOE has been charged with conducting research on the reliability of the national electrical infrastructure. This program focuses on applying computing, sensing, power electronics, communications, and control technologies to provide real time system control for the reliable and efficient operation of the nation's power system under both normal and emergency operating conditions. Actual

system performance data and real-time statistical sample data will be critical to the testing and validity of system models developed by the Transmission Reliability Program. Therefore, the data and monitoring provided by TPQ will be critically important to the validity of system simulation models.

The last and perhaps most beneficial justification for the project is the experienced gained by participating utilities. The utilities that participate in TPQ will gain valuable experience in the installation, operation, and maintenance of a large scale, long term monitoring system. In addition, they will gain expertise in managing large quantities of monitoring data. Deregulation may require utilities to operate and maintain large scale monitoring systems to ensure compliance with regulatory and customer contractual requirements. Utilities will also benefit from having statistically valid data to benchmark their performance and prioritize improvement projects.

PROJECT METHODOLOGY

A project of this scope requires a carefully designed and planned methodology. DPQ is a similar project on which to draw experience but large differences exist between monitoring of distribution systems and large transmission networks. The preliminary study team focused much of their efforts on developing a sound and comprehensive methodology. Project methodology includes such areas as: 1) Defined Monitoring Region, 2) Performance Criterion, 3) Statistical Sampling Points, 4) Data Collection, 5) Data Transfer, 6) Data Management

DEFINED REGION

Performing a national study would be a difficult task, so the study team initially recommended a smaller defined region of the U.S. As the team reviewed factors that influence the performance of transmission networks, lightning was found to be a major contributor to transmission system disturbances. Lightning strike densities vary widely throughout the U.S. Concentrating on a specific region reduces this variability and lends to the statistical validity of the study. In addition, SEE was already in place to facilitate a project of this scope for a defined geographic region.

It was then determined that the region to be studied would be a 13 state area within the southeast U.S. as shown in Figure 1.

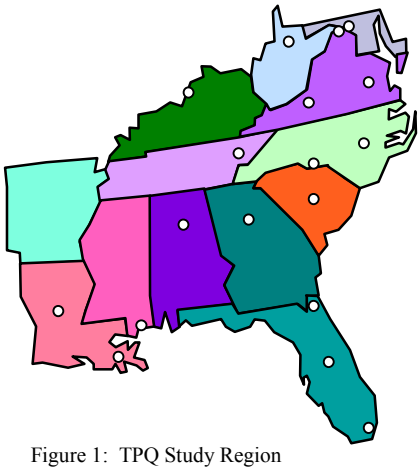

Figure 1: TPQ Study Region

Utilities in the region targeted for participation are:

Alabama Power	Allegheny Energy	American Electric Power
Cleco Corporation	Constellation Energy Group	Carolina Power & Light Co.
Duke Power	Entergy Corporation	Florida Power & Light Co.
Florida Power Corp.	Georgia Transmission Corp.	Georgia Power
Kentucky Utilities	Mississippi Power	Potomac Electric Power
Savannah Power	South Carolina Elec. & Gas Co.	TVA
Tampa Electric	Virginia Power	

PERFORMANCE CRITERIA

Two significant criteria were determined to influence the overall performance of a transmission network—voltage class and lightning strike density. Miles of line in each defined voltage class and regional lightning data were then chosen as performance criteria. A flash density map of the region is shown in Figure 2.

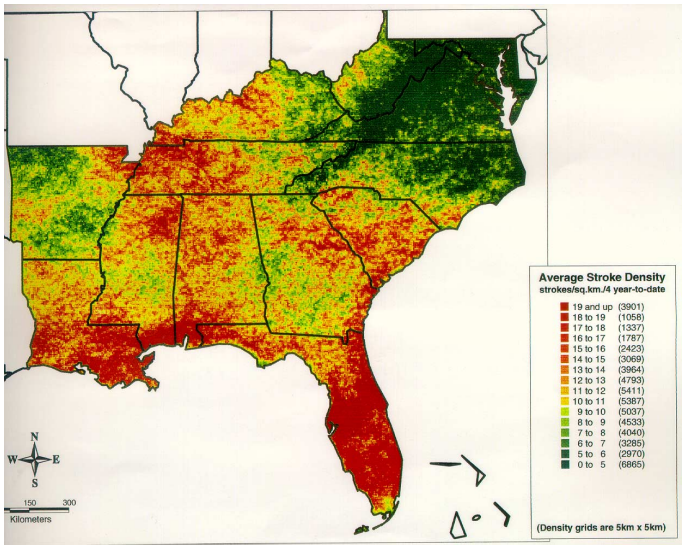

Figure 2: Flash Density Map of Study Region

This data was provided by Global Atmospherics using a 5 sq km grid precision averaged on a five year period. This analysis will determine a total range of densities throughout the region and allow the project statistician to specify three bins for lightning densities for which to stratify the potential sample points.

STATISTICAL SAMPLING POINTS

Since the question is around the quality of the power being delivered by the transmission system, the study team determined that monitors should only be placed at points in the network where deliveries are present.. There deliveries can be direct served customers, distribution substations, municipalities, co-ops or any entity taking power directly from the network. It was determined to be more cost effective if the monitors were placed on the low-voltage side of these deliveries as shown in Figure 3.

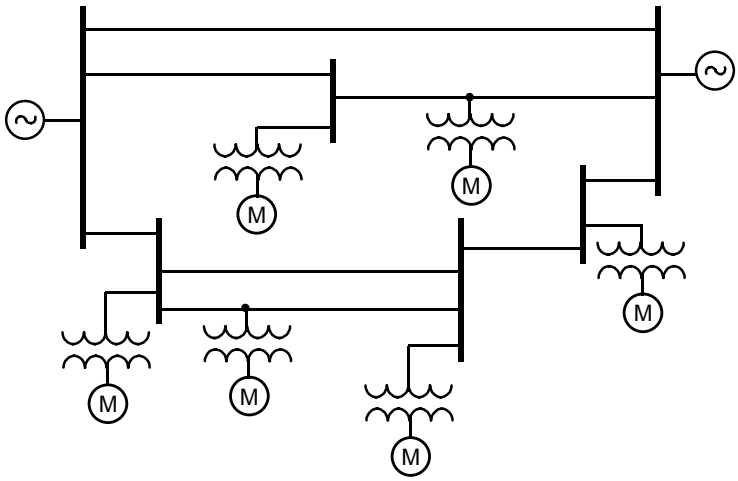

Figure 3: Typical Transmission Network Serving Various Deliveries

By using the low-voltage side of deliveries, utilities will be able to utilize any existing potential and current transformers. Any deliveries that have revenue quality metering should have appropriate equipment to collect the required data. Deliveries of this type may already contain phone lines for transporting data. Special software algorithms will be developed to filter out any down stream events that would compromise the data. One year's worth of monitoring data from one large utility in the region was studied to analyze variances among selected sites. Given selection criteria and variances of this data, it was determined that a minimum of 300 points is required to produce a statistically valid study. The number of points per utility will be primarily influenced by size of service territory and number of potential sites.

DATA COLLECTION

Data collection is a critical element of the project. It requires many participants collecting data at multiple points and transferring that data to a central collection point on a daily basis. Data from every monitor is critical to ensure credibility of the overall database. Therefore, it is imperative that each participant properly install, maintain, and operate all monitors in the project.

Power quality encompasses a large spectrum of disturbances. As a result, the team elected to capture the following events using definitions specified in IEEE 1159:

- Sags
- Overvoltage
- Sustained Interruption
- Swells
- Momentary Interruption
- Transients
- Undervoltage
- Temporary Interruption
- Steady State rms Snapshots

A large variety of power quality monitors are available today and the study team did not want to specify only one type as was required in DPQ. Therefore, hardware specifications were defined based on the above data to be captured. Utilities can elect to utilize any monitor that meets the specifications. A common software provided by EPRI will be used to analyze and characterize the data.

DATA TRANSFER

Utility personnel will be assigned to the project to ensure adequate transfer of data. Data will be transferred to a central server managed by EPRI via several options with the preferred being automatic file transfer protocol. The transfer will occur on a daily basis. Any discontinuity of data must be promptly addressed by utility personnel. Technical resources within EPRI and other participating utilities are available to assist in resolving data collection and transfer issues.

DATA MANAGEMENT

The central collection point will provide a variety of roles regarding data management. The central collection point will collect and manage the bulk raw data provided by the participating utilities, and provide some manipulation of the data in preparation for transfer to Sandia for final analysis.

Many of the monitoring points may be substations feeding distribution circuits, such as retail stations, municipalities, or co-ops. A concern is that events caused within the distribution system will be recorded by the monitors. One of the first steps of data management will be to filter out downstream events. This can be done through the development of a software algorithm that will detect fault current levels and determine if the fault occurred downstream.

As the bulk data is collected at the central collection point, it must be compiled into one complete database for final analysis. To preserve anonymity of the individual utilities, information regarding the source of the data will be manipulated such that only the key parameters are transferred, such as the particular voltage class and lightning strike density category.

Preliminary analysis may be done at this point, providing for example total voltage sag counts, or classification of events into bins such as specific depths of voltage sags (as applicable to specific indices or other desired classification).

The complete database will be continually appended as new data is received. This database will be periodically transferred to Sandia for statistical data analysis and reporting. Each utility will be able to access their data and will have access to the results of the analysis on the composite data set. Figure 4 illustrates the transfer process.

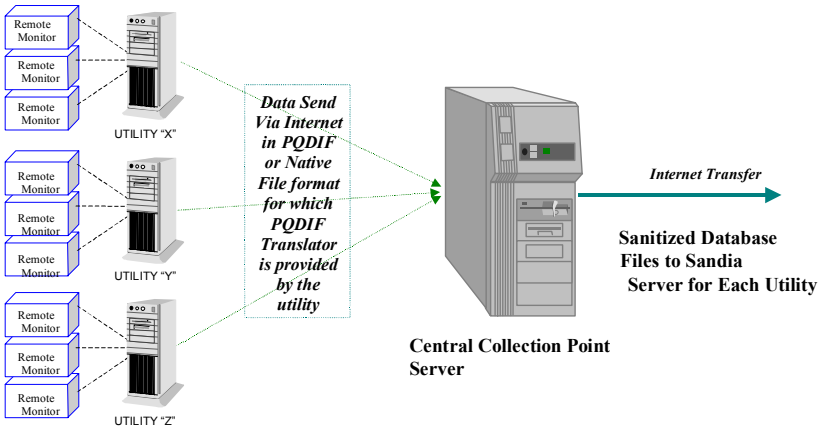

Figure 4: The data transfer process.

COST AND SCHEDULE

Estimated costs for the project are as follows:

Hardware		**Labor**	
Monitor	$1,898,600	Utilities	$2,894,340
Server	100,000	EPRI	640,000
Software License	50,000	Sandia	390,000
		SEE	21,468
	$2,048,600		$3,945,808
Supplemental Studies		**Travel Expenses**	
Statistician	$50,000	Utilities	$352,000
Lightning Data	20,000	EPRI	46,000
DPQ Methodology	390,000	Sandia	36,000
Software Development	390,000	SEE	24,000
	$850,000		$458,100
Total Project Cost	**$7,302,508**		

The Office of Power Delivery in the Department of Energy funded the study team and is proposing to fund the project on a cost-share basis. The intent of DOE is to reimburse up to 50% of the estimated expenses pending the funding level for this project as appropriated by Congress. Funding was approved for year one of the project and requests for year two have been forwarded for approval.

Below is an estimated project schedule of major milestones.

Milestones	**Date**
Year One Funding Approved	10/18/99
Year Two Funding Approved	10/15/00
Recruitment of Participating Utilities	7/1/00
Site Selection Complete	9/1/00
Sandia contracts with each Utility	12/1/00
Data Collection Begins	3/1/01
Data Collection Ends	3/1/03
Final Report	9/1/03

CURRENT STATUS

On May 30, 2000 five utilities that comprise a major portion of the defined region (certainty stratum) were notified of the project. Their commitment needed to be secured before further action could be taken. After the five utilities have committed, other utilities in the defined region would be invited to participate. If one or more of the certainty stratum declined to participate the region must be redefined.

At this time, three of the five "certainty stratum" declined to participate. As a result, a statistically valid sample of the Southeast region cannot be achieved. Rather than try to define another region, three options are proposed:

1. Continue the project by collecting data from five sites and from 10 of the 12 defined bins or
2. Statistically sample a newly formed RTO within the region, Gridsouth or
3. Combination of 1 and 2.

Response from the statistician on the required number of sites to characterize Gridsouth will be the determining factor as to which option is selected.

CONCLUSION

The initiative to measure and characterize the quality of power delivered by a transmission network is a large and challenging effort. Beginning with a smaller region of the U.S. will make such a project more feasible. Having an organization like SEE to solicit participation and facilitate the project is a big advantage. Involvement of Sandia National Labs and EPRI will bring needed expertise, experience and credibility to the effort. Sponsorship by the Department of Energy, Office of Power Delivery is a critical element in the project and without it there would be little chance of success.

A preliminary study team of utility representatives, Sandia, EPRI and SEE have outlined a solid methodology and game plan for the project. Tasks are currently on track to begin collecting data on March 1, 2001 with final the report scheduled for September 1, 2003.

The deliverable of the project, a statistically valid database, would characterize the quality of power delivered by a transmission network which would have a number of important applications within the industry. Because three large utilities within the region have declined to participate, other options are being evaluated.

ACKNOWLEDGEMENTS

The author wishes to thank the Preliminary Study Team and Southeastern Electric Exchange for their efforts under contract BD-0104. Additional thanks to the Office of Power Delivery of the Department of Energy for their support and financial assistance of the project.

REFERENCES

1. "Restructuring the Thin Stretched Grid" by William Sweet, Senior Editor, IEEE Spectrum, June 2000, pp. 43-49.
2. Jane M. Clemmensen, "A Systems Approach to Power Quality*, "Proceedings of Power Quality 1989*, reprinted in IEEE *Spectrum* (June 1993).
3. "Inside Intel", Monitoring Power Quality Manufacturing *i*486$_{TM}$ Microprocessors; W.H. Jones, S.P. Conrad, Public Service Co. of New Mexico; W. Buckner, Intel Corporation; D.R. Mueller, Electrotek Concepts, Inc.
4. Power Quality at Champion Paper – The Myth and the Reality; C.A. Warren, T.A. Short, Power Technologies, Inc.; J.J. Burke, ABB Power T&D Co. Inc.; H. Morosini, Champion International; C.W. Burns, J. Storms, Niagara Mohawk Power Corp.
5. Investigation of Electric Drive System Responses to Lightning Related Voltage Sags; Y. Yin, A.Y. Wu, Global Engineering Co.; T. Blackburn, Georgia-Pacific Corp.
6. RMS Voltage Variation Statistical Analysis for a Survey of Distribution System Power Quality Performance; D.D. Sabin, T.E. Grebe, Electroteck Concepts, Inc.; A. Sundaram, EPRI.