ADVANCED NAS BATTERY SYSTEM

Akiyasu Okuno, Makoto Kamibayashi, Kouji Tanaka
Tokyo Electric Power Co., Inc., Tokyo,
Japan

Keyword: Load leveling, Upsizing Unit Cells, Advanced NAS Battery, 6MW System, Ohito Substation

Synopsis: Being pursued is the research and development of sodium sulphur batteries (NAS batteries) intended primarily for load leveling. With the aim of reducing system costs and size, we addressed ourselves to the problem of developing unit cells having greater capacity. In March 1999, we installed an advanced NAS battery system using upsized unit cells (T5 cells) in the Ohito Substation so as to conduct commercial demonstration tests. The following is a report on the operation and performance of the advanced NAS battery system describing the outlook for future battery costs and the necessity of coordination directed toward widespread commercial use of such systems.

1 Introduction

In 1983, Tokyo Electric Power Company and NGK Insulators, Ltd. began joint development of sodium sulphur batteries (NAS batteries) for power demand load leveling. During the subsequent years, β-alumina tubes, unit cells, and modular batteries were developed. Since 1992, research into commercial prototype batteries has been carried out, and since 1994, improvement of battery performance studies on means of cost reduction, and demonstrations of battery safety have been addressed.

In 1996, we started upsizing unit cells to reduce both system size and costs, with the feasibility of developing such batteries clarified. In March 1999, on the basis of these development results, we installed an advanced NAS battery system using upsized unit cells (T5 cells) to conduct commercial demonstration tests.

Table 1-1 outlines the results of commercial demonstration tests conducted thus far.

Table 1-1: The System's outlines and Operation results

Operation Start	Place	Output	Capacity	Purpose	Use	Cell type
Dec. 1992	Kawasaki Electric Energy Storage Test Facilities	50 kW	400 kWh	Prototype	Future Practical	T3
Dec. 1994		4 kW	32 kWh	L.L	Customer	T4.1
Aug. 1995		500 kW	4,000 kWh	Subsystem of 6MW	Substation	T4.1
Dec. 1995	TEPCO New Energies Park	50 kW	400 kWh	L.L+ Supplement of Wind Power	Customer	T4.1
Dec. 1995	Kawasaki Electric Energy Storage Test Facilities	275 kW	2,310 kWh	L.L+E.P.S	Customer	T4.2
Jun. 1996		200 kW	800 kWh	L.L+U.P.S	Customer	T4.2
Mar. 1997	Tsunashima Substation	6,000 kW	48,000 kWh	L.L	Substation	T4.2
Jan. 1998	Kinugawa Power Station	193 kW	772 kWh	L.L	Customer	T4.2
Mar. 1999	Ohito Substation	6,000 kW	48,000 kWh	L.L	Substation	T5
Sep. 1999	Technical Development Center	200 kW	1,600 kWh	L.L	Customer	T5

A 6MW (48MWh)-class system, having a scale suitable for a power substation, was installed in the Ohito Substation, with Unit 1 put into operation in March, 1999, Unit 2 in June, 1999, and Unit 3 in October, 1999. Through the commercial operation of this advanced NAS battery system, we are evaluating the efficiency, durability, reliability, system interconnectivity, and operability and maintainability of NAS batteries and AC/DC converters, thereby establishing technologies for optimum system design as well as operation and maintenance.

2 Outline of the Ohito System

2.1 System Configuration

A substation-use NAS battery system is given an output capacity of 10 to 20% of that of a distribution power substation in order to level off loading and eliminate overloading of equipment connected in series. In the Ohito system, three 2MW (16MWh) units are installed. Fig.2 - 1 shows the single-line diagram of the NAS battery system of the Ohito Substation.

As on a distribution line, the Ohito system is connected from the bus on the transformer secondary (6.6kV) to the link transformers (6.6kV/580V) via circuit breakers, and further to the modular battery groups via AC/DC converters (AC580V/DC1328V).

Fig.2-1: Single-line diagram of Ohito Substation NAS battery system

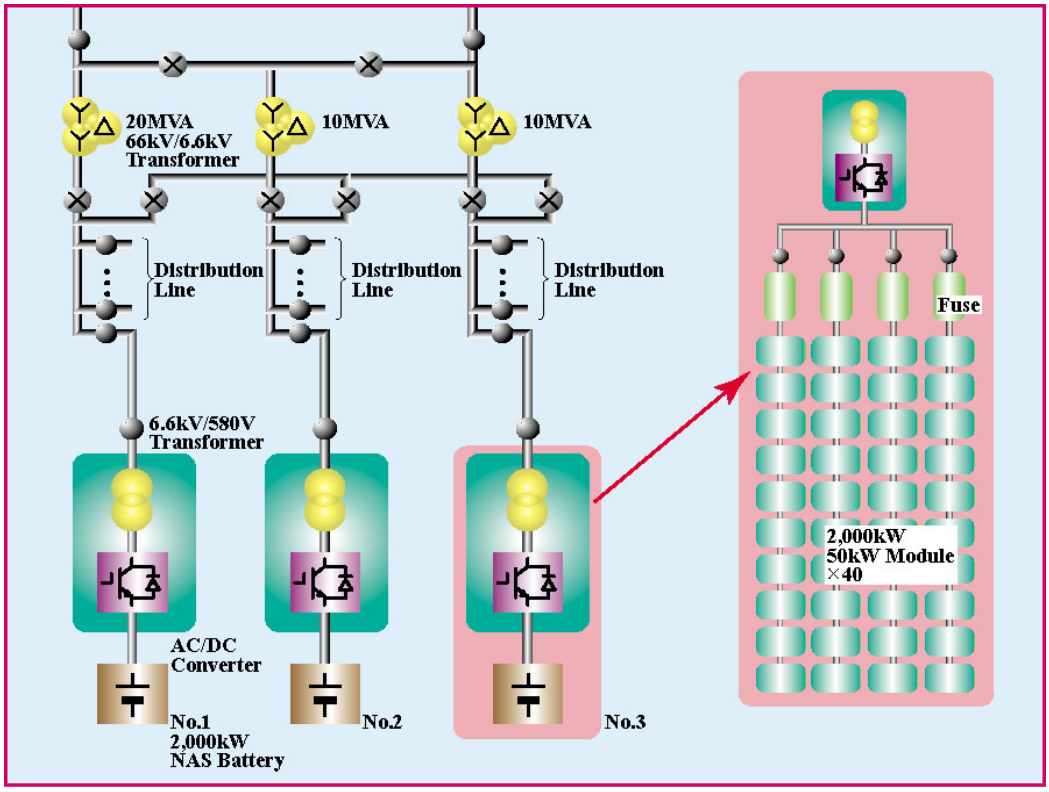

6,000kW NAS Battery Power Storage System of TEPCO

The knowledge obtained from the Tsunashima system (put into operation in March, 1997) was used to design a cost-reduction-oriented system; reduction of the number of parts achieved through adoption of upsized unit cells (T5 cells) and selection of general-purpose products enabled both size and costs to be reduced.

As a result, when compared with the Tsunashima system, the Ohito system has improved the per area energy density by 26% while limiting the increase in the per volume energy density to 1%. In addition, the system cost has been reduced by 23%.

2.2 System Specifications

Table 2 - 1 shows data on the Ohito Substation 6MW NAS battery system. Fig.2 - 2 shows the entire view of the Ohito Substation 6MW NAS battery system.

Table 2-1: Specifications for Advanced 6 MW System at Ohito Substation

Purpose	Load Leveling
Module output [kW DC]	52.6 kW DC (122V x 332A)
Module numbers	40 (10S x 4P)
Output power [kW DC]	2,105 kW (1,210V x 1,340A)
Discharge time	10.5 hrs

Fig. 2-2: Entire view of Ohito Substation 6MW NAS battery system

3 Operations of Ohito System

Units 1, 2, and 3 attained 339, 193, and 173 charge-discharge equivalent cycles respectively as of the end of August, 2000.

Table 3 -1 shows charge-discharge efficiency of the NAS batteries and AC/DC converters together with system efficiency at the early stage of the operation. The table allows the initial characteristics to be evaluated, indicating that the specified design targets have been achieved.

Table 3-1: Efficiencies of NAS batteries, AC/DC converters, and system

(Aug. 31, 2000)

		Unit 1	Unit 2	Unit 3	As-designed efficiency
Operation Start		Mar. 24, 1999	Jun. 29, 1999	Oct. 27, 1999	
Number of Cycles		339	193	173	
Initial Efficiency	Batteries (DC base)	87.3%	87.0%	86.1%	86.0%
	AC/DC converters	96.2%	95.9%	96.0%	95.0%
	System (AC base) *	76.8%	74.6%	74.0%	74.0%

* Weekly average efficiencies on a five-days-per-week operation basis

4 Outlook for Future Battery Prices and the Necessity of Coordination

Depending on future development of various factors, prices of NAS batteries can be reduced as shown in Fig.5. However, if worldwide cooperation can be realized before the mass production of NAS batteries becomes commercially feasible, commercial use of NAS batteries can be realized much earlier. Although such coordination involving manufacturers has been attempted rarely in the past, it will be required frequently for future development of power technologies.

To realize such coordinated action, it is necessary, first of all, to have a common understanding of the current status and near-future possibilities of the technology involved.

Fig. 4: Outlook on the costs of NAS Battery production

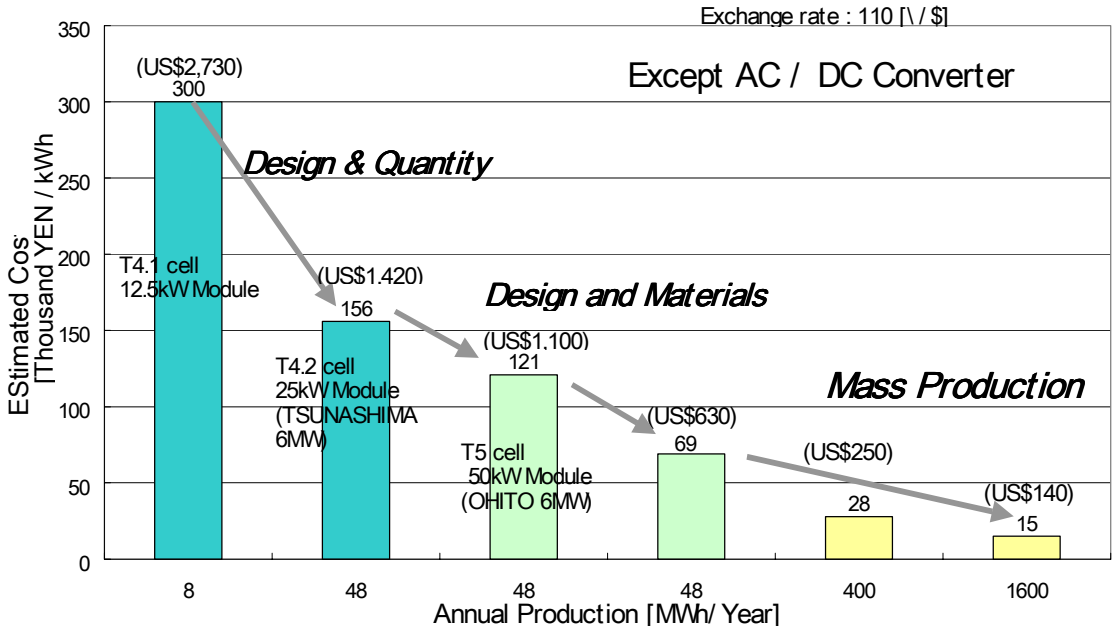

5 Conclusion

Evaluation of the results of the commercial demonstration test at the Ohito Substation will be completed by the fall of 2001. We hope that those attending this conference as representatives from power utilities will support efforts toward widespread use of NAS batteries which are positioned closest to commercialization.

6 References

[1] DEVELOPMENT OF COMPACT SODIUM SULPHUR BATTERY
Mr. Etsuji Kodama and others, International Conference of EESAT '98, Chester, U.K.

[2] A NEW POWER SUPPLY SYSTEM USING NAS (SODIUM SULPHUR) BATTERY
Mr. Yoshiharu Tachibana, 17th Congress of the World Energy Council, Texas, U.S.A.

[3] ADVANCED NAS BATTERY SYSTEM FOR LOAD LEVELING
Mr. Etsuji Kodama and others, 6th International Conference Batteries for Utility Energy Storage, Gelsenkirchen, Ger.

[4] LATEST DEVELOPMENTS OF THE NAS(Sodium-Sulphur) BATTERY PROJECT IN JAPAN
Mr. Yoshiharu Tachibana, Energy Resource 2000, http://www.energyresource2000.com/