Energy Storage Controls for Grid Stability

Wednesday, September 26, 2012

Ray Byrne, Ph.D.

Jason Neely, Ph.D.

Cesar Monroy, Ph.D.

David Schoenwald, Ph.D.

*Dan Trudnowski, Ph.D.

*Matt Donnelly, Ph.D.

*Montana Tech University

Sandia National Laboratories

Exceptional service in the national interest

U.S. DEPARTMENT OF ENERGY

NNSA National Nuclear Security Administration

Sandia National Laboratories is a multi-program laboratory managed and operated by Sandia Corporation, a wholly owned subsidiary of Lockheed Martin Corporation, for the U.S. Department of Energy's National Nuclear Security Administration under contract DE-AC04-94AL85000.

Acknowledgements

- The work was performed under funding from the DOE Energy Storage Program managed by Dr. Imre Gyuk of the DOE Office of Electricity.

Energy Storage Controls for Grid Stability

- Power systems are susceptible to low frequency oscillations caused by generators separated by long transmission lines that oscillate against each other
- These oscillations are not as well damped as higher frequency "local" oscillations
- Energy storage-based damping controllers can mitigate these oscillations

1996 breakup caused by low-frequency oscillations

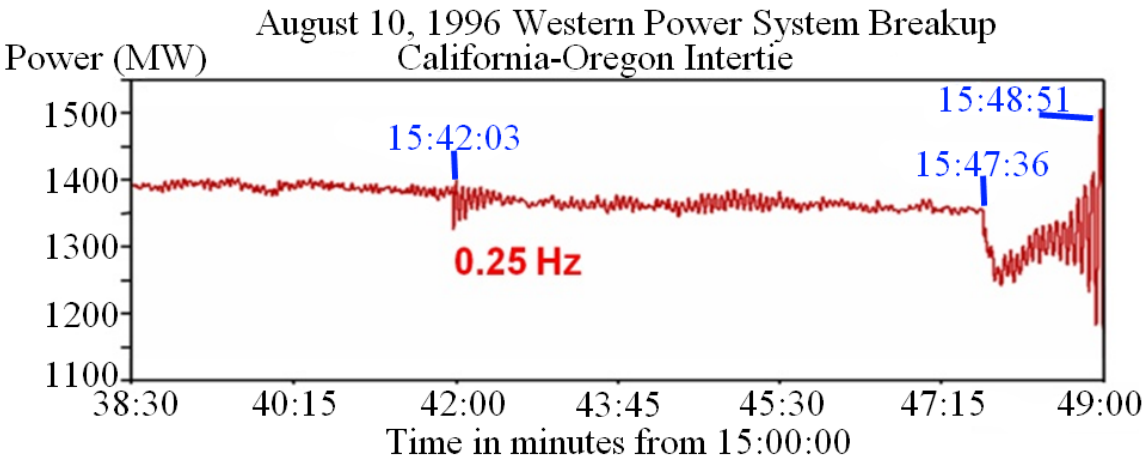

Energy Storage Controls for Grid Stability

- There are several low frequency oscillation modes in the Western Electricity Coordinating Council (WECC) region[1]
  - "North-South" mode nominally near 0.25 Hz;
  - "Alberta-BC" mode nominally near 0.4 Hz;
  - "BC" mode nominally near 0.6 Hz; and,
  - "Montana" mode nominally near 0.8 Hz.
- Researchers at Montana Tech and Bonneville Power Administration (BPA) have investigated damping controls for the WECC
- This project builds on their results

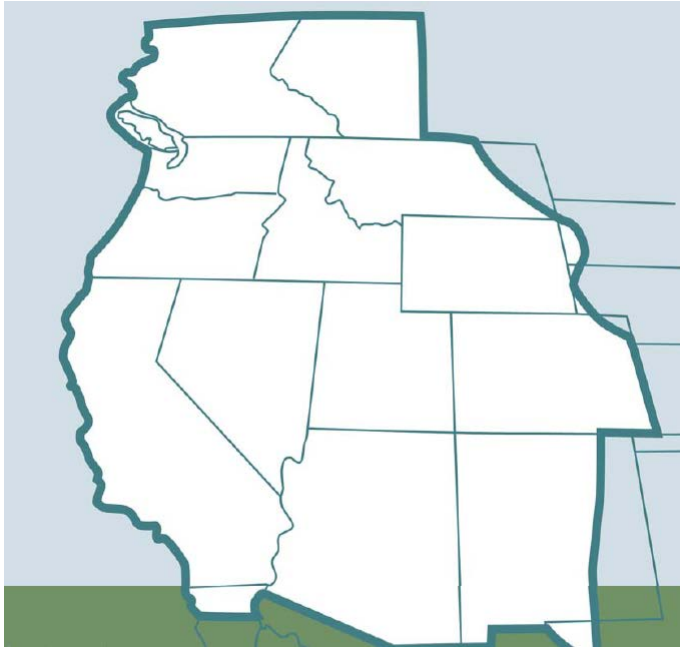

[1]D. Trudnowski, "Baseline Damping Estimates," Report to Bonneville Power Administration, September 2008.

Damping control basics

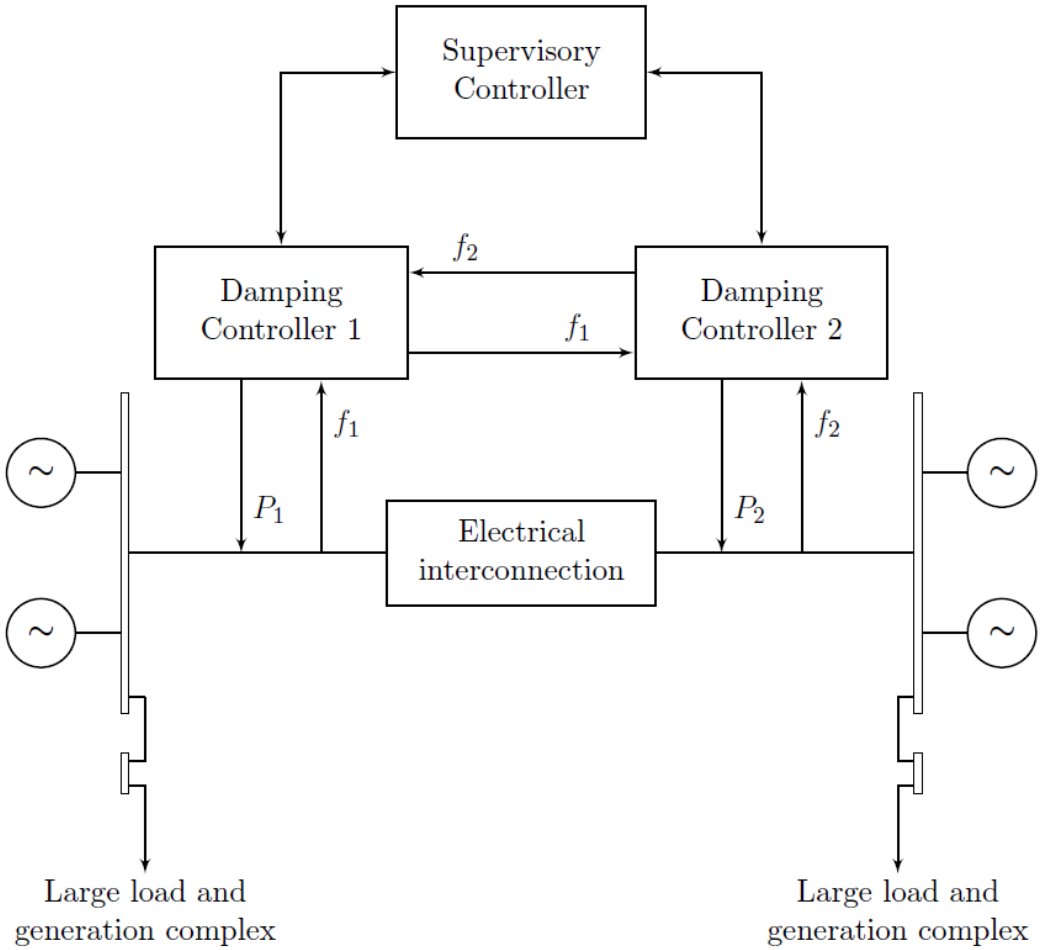

$$\Delta P_1(t) = -K_d(f_1(t) - f_2(t-\delta))$$

$$\Delta P_2(t) = -K_d(f_2(t) - f_1(t-\delta))$$

Project Goals

- Assess storage technologies for the damping control application
  - Develop high fidelity models
  - Perform PSLF simulations to validate performance
- Develop safeguards for the supervisory control system to insure that it can never destabilize the grid
- Develop a pilot project to be deployed in 2013

Damping Control Performance Requirements

- A typical damping control node must meet the following performance requirements:
  - Output power +/- 10MW per device, ~10 total devices
  - Bandwidth to track a $P_{command}$ signal in the 0.25-1Hz range (real power modulation)
  - Minimal latency
- Previous simulation results from BPA and Montana Tech have shown acceptable performance with a first order system model[1] (bandwidth ~ 3.2 Hz)

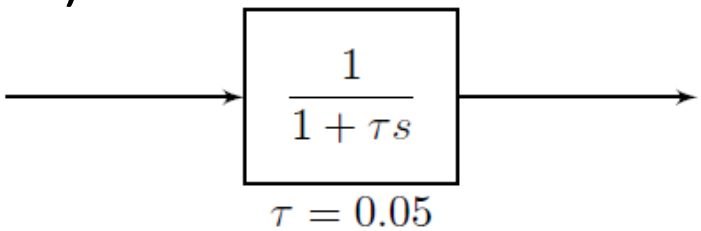

[1]Dan Trudnowski, "Analytical Assessment of Proposed Controls," Report to Bonneville Power Administration under contract number 37508, September 2008.

Ultra Capacitor System

- High fidelity (12th order) model based on a Maxwell Technologies ultra-capacitor
  - 125V Heavy Transportation Module
  - 1,000,000 charge/discharge cycles
  - 63F, 125V
  - Model accurate to ~10% power dissipated across the ESR

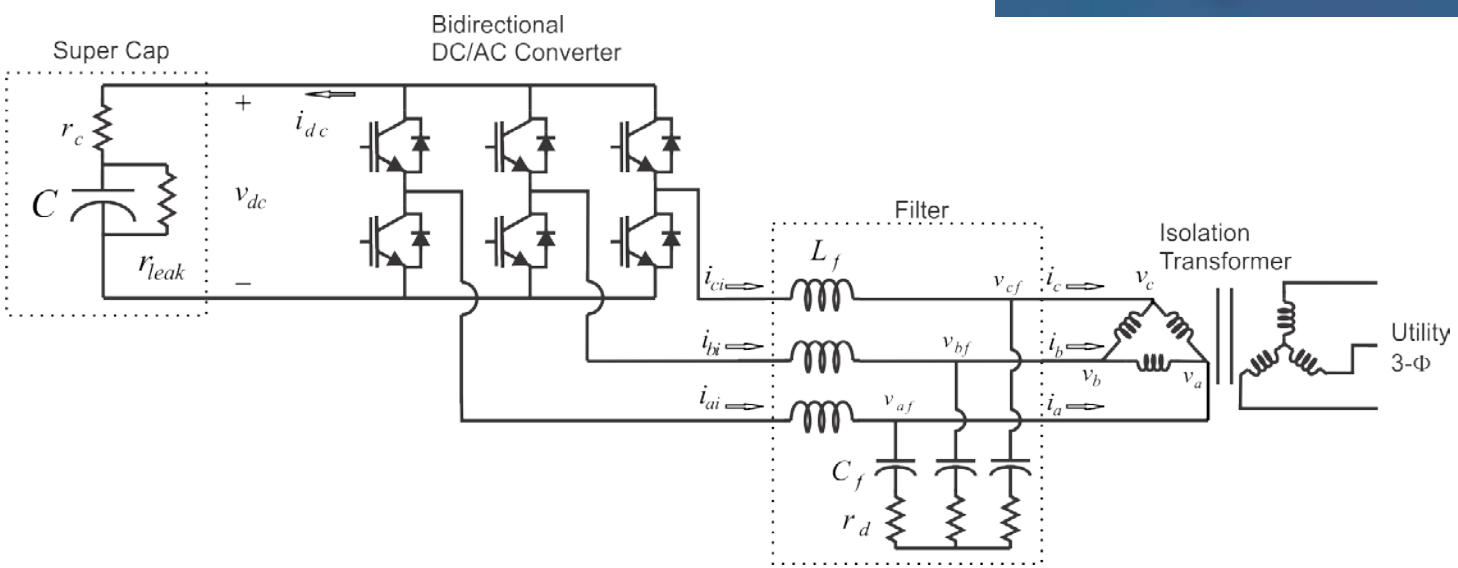

Flywheel System

- High fidelity (14th order) model based on a Beacon flywheel (Smart Energy 25 Flywheel)
  - Parameters were derived from published performance data

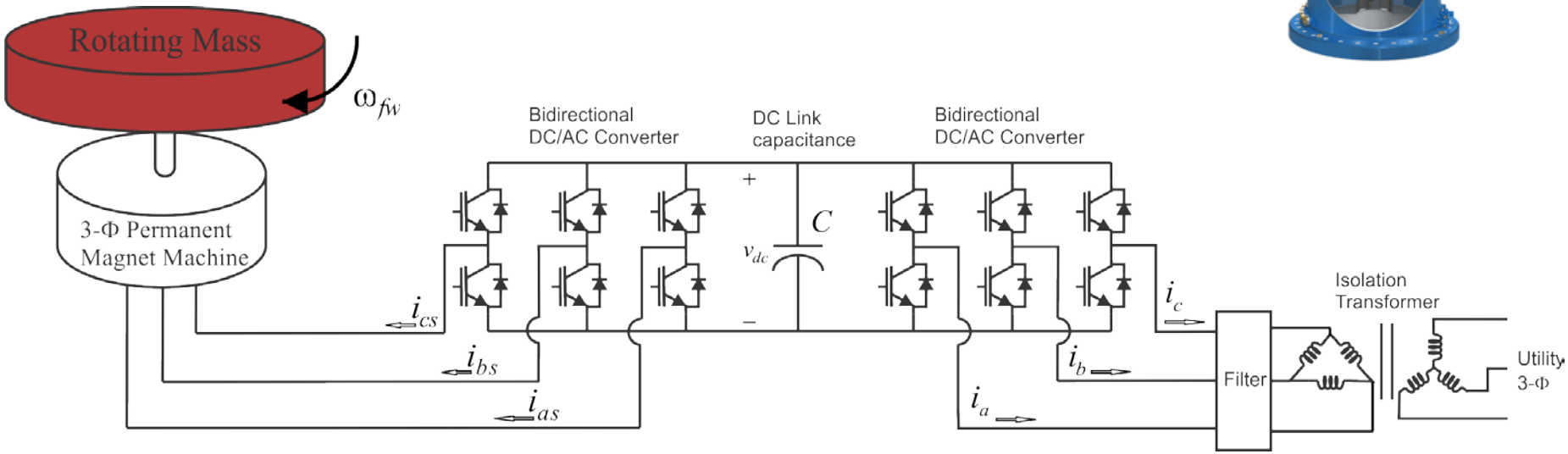

Battery System

- High fidelity (14th order) model based on a carbon enhanced valve regulated lead acid battery from East Penn Manufacturing[1]

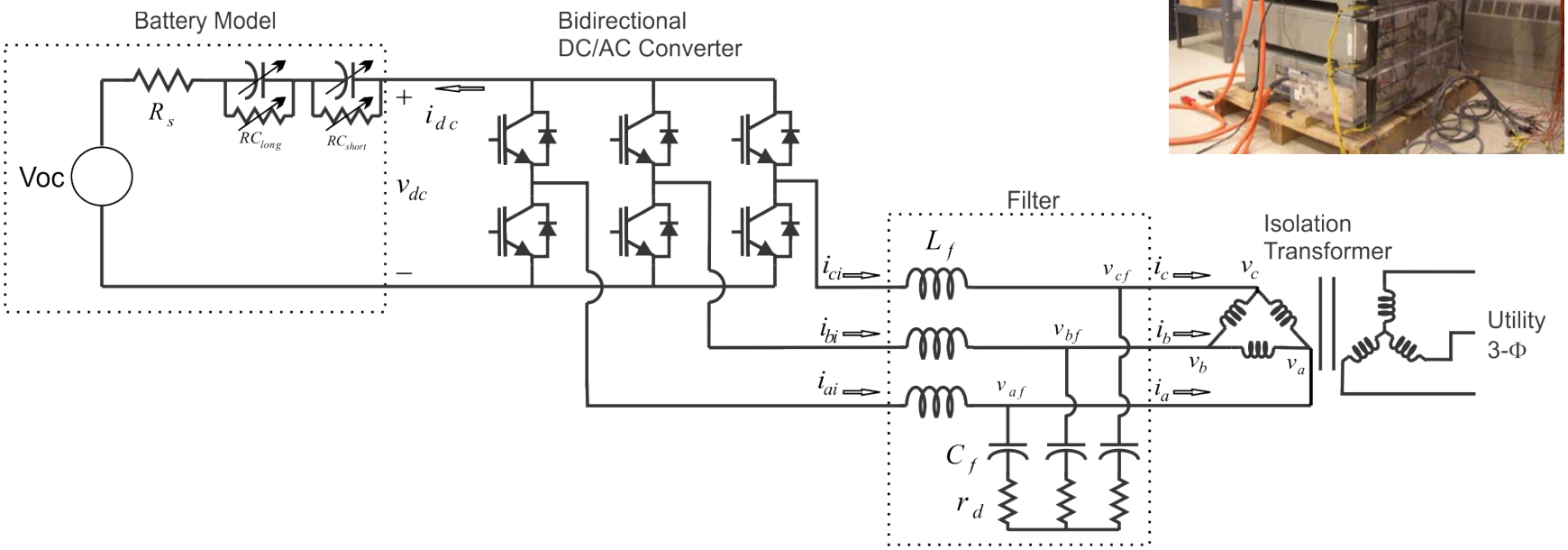

[1]D. Fregosi, S. Bhattacharya, and S. Atcitty, “Empirical Battery Model Characterizing a Utility-scale Carbon-enhanced VRLA Battery”, 2011 IEEE Energy Conversion Congress and Exposition (ECCE), September 17-22, 2011, pages 3541-3548.

Performance Validation

- Dynamics are dominated by the control system design (PI of currents in the qd reference frame)
- First order model accurately approximates the higher order system model
- All designs exceed the bandwidth requirements of 3.2 Hz

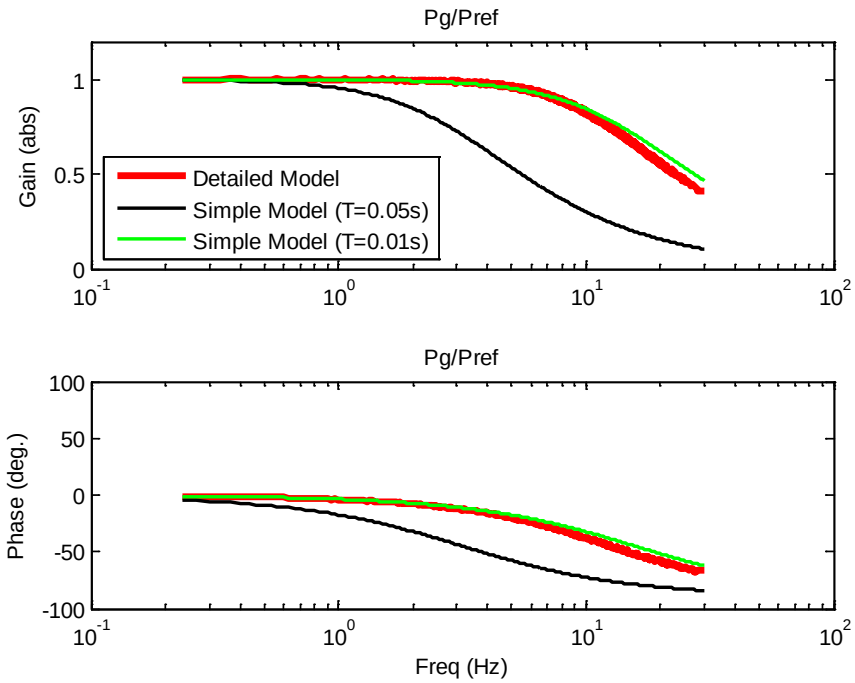

WECC PSLF Simulation Results

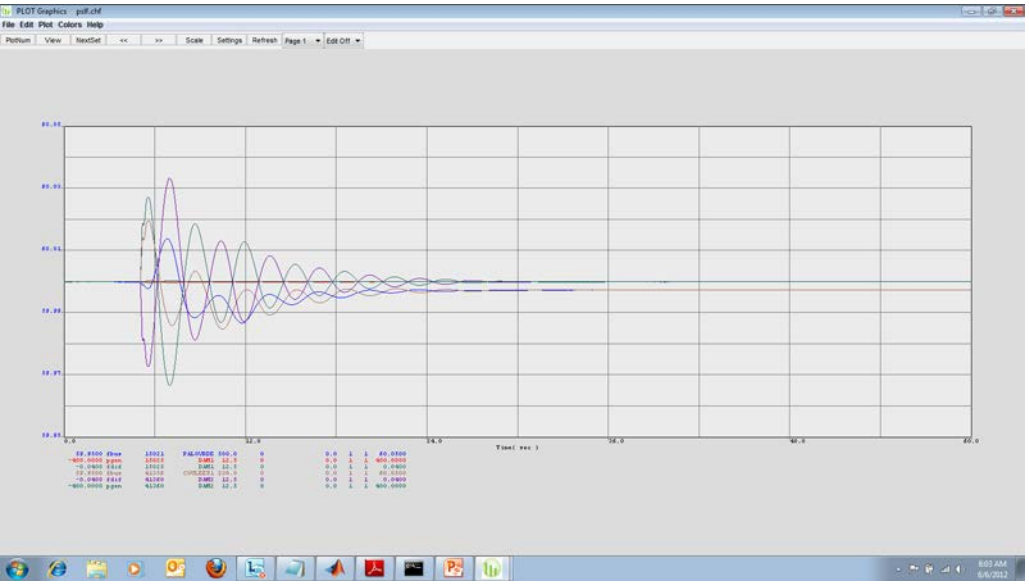

$k_p = \quad 0.1$ MW/mHz

+/-300MW control nodes at
Palo Verde⇔ Coulee
f_{dif} measured between
Palo Verde ⇔ Coulee
2017 Heavy Summer Base Case

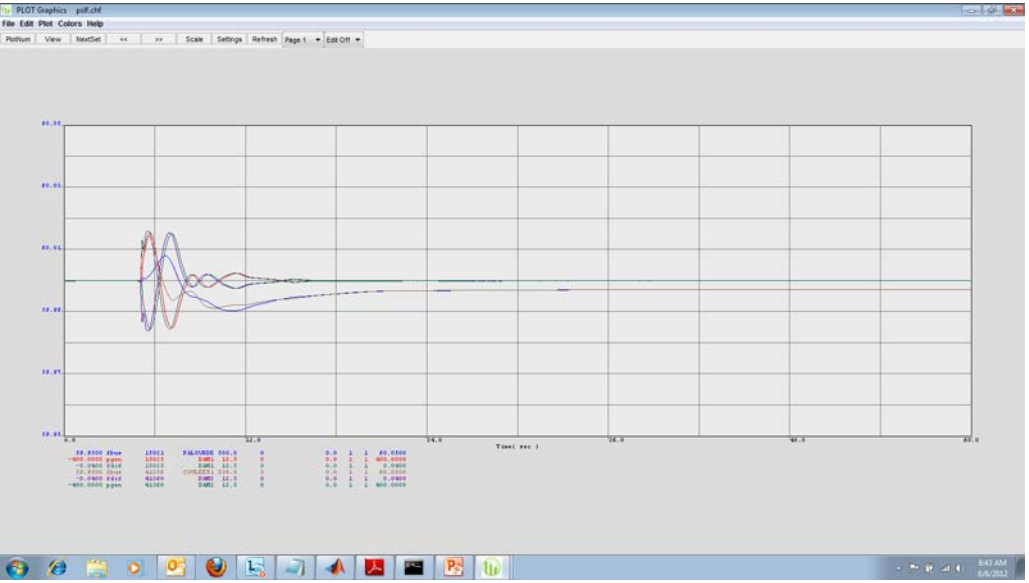

$k_p = \ 10$ MW/mHz

Stability Analysis

- Two-area model
- Damping controllers

have the form:

$$P_{D1}(t) = -K_d(\omega_1 - \omega_2(t - T_d))$$
$$P_{D2}(t) = -K_d(\omega_2 - \omega_1(t - T_d))$$

$$P_{D1}(s) = -K_d(\omega_1(s) - \omega_2(s)e^{-sT_d})$$
$$P_{D2}(s) = -K_d(\omega_2(s) - \omega_1(s)e^{-sT_d})$$

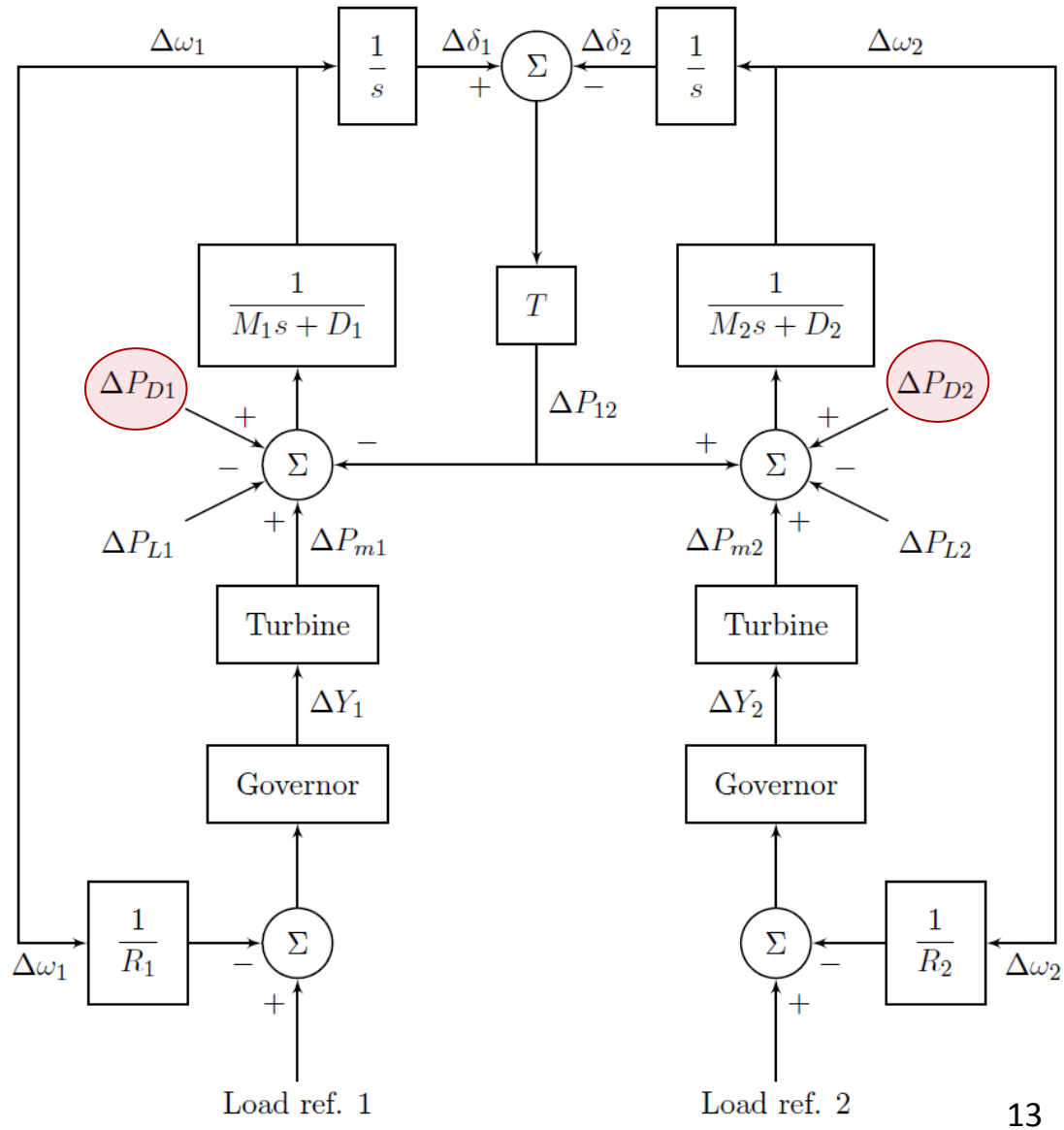

Stability Analysis

- Apply the Nyquist stability criterion to the two-area model
- Specify a relative stability margin
  - Gain margin
  - Phase margin
- ESAC Boundary
- Identify stability regions in (gain, delay) space

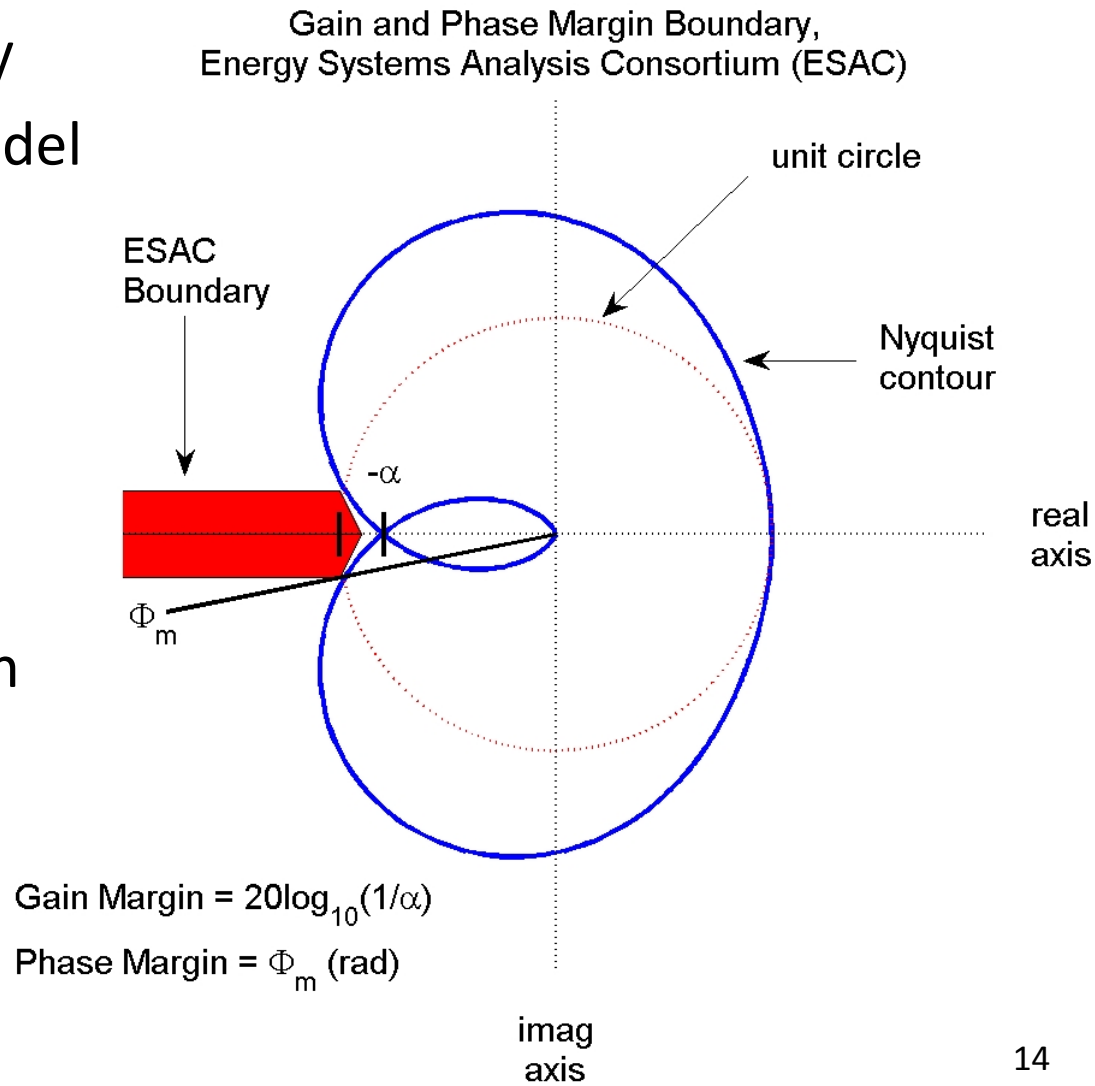

Stability Analysis - Results

- ESAC Boundary
  - 3 db gain margin
  - 9 degrees phase margin
- Unstable system (e.g. damping control required)

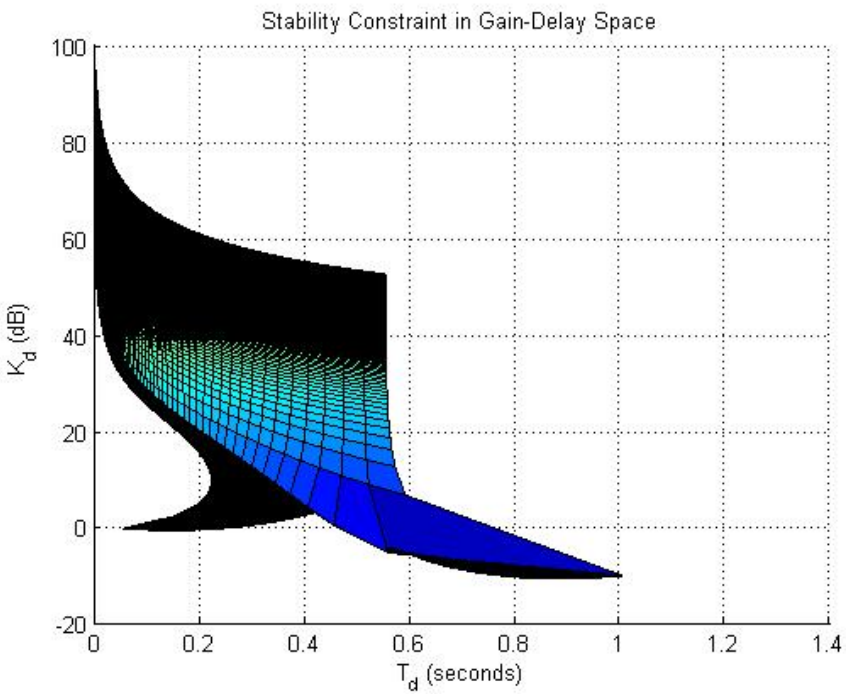

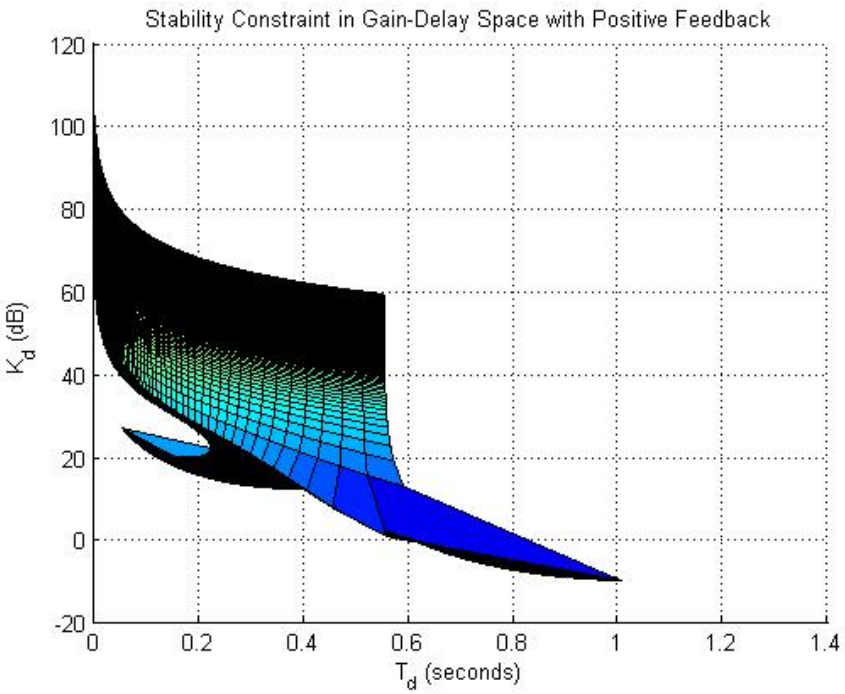

Accomplishments

- Developed high fidelity models for:
  - Ultra capacitor system
  - Flywheel system
  - Battery system
- Validated damping controller performance in PSLF using a WECC model
- Developed an analytical approach for supervisory control gain scheduling
- A Technology Innovation Proposal to Bonneville Power Administration was accepted for a follow-on demonstration project (co-funded by DOE)

Future Tasks

- Develop battery models for dynamic (e.g. control system) simulations
- Extend supervisory control stability analysis to multi-area systems
- Incorporate additional supervisory control functions
  - Real-time damping monitoring
  - Recommend additional actions in response to contingencies
- Develop methods to apply this technique to the WECC
- Characterize PMU communications latency
- Recommend PMU design standards for control applications
- Proof-of-concept demonstration with BPA

Contact Information

- Ray Byrne, Ph.D.

  email: rhbyrne@sandia.gov

  phone: 505 844-8716