John Wood
Ecoult

Grid-Scale Energy Storage Demonstration for Ancillary Services Using UltraBattery®

PJM Frequency Regulation

EAST PENN manufacturing co., inc.

ecoult
energy storage solutions

UltraBattery®

Deka unigy UltraBattery

UltraBattery® Technology

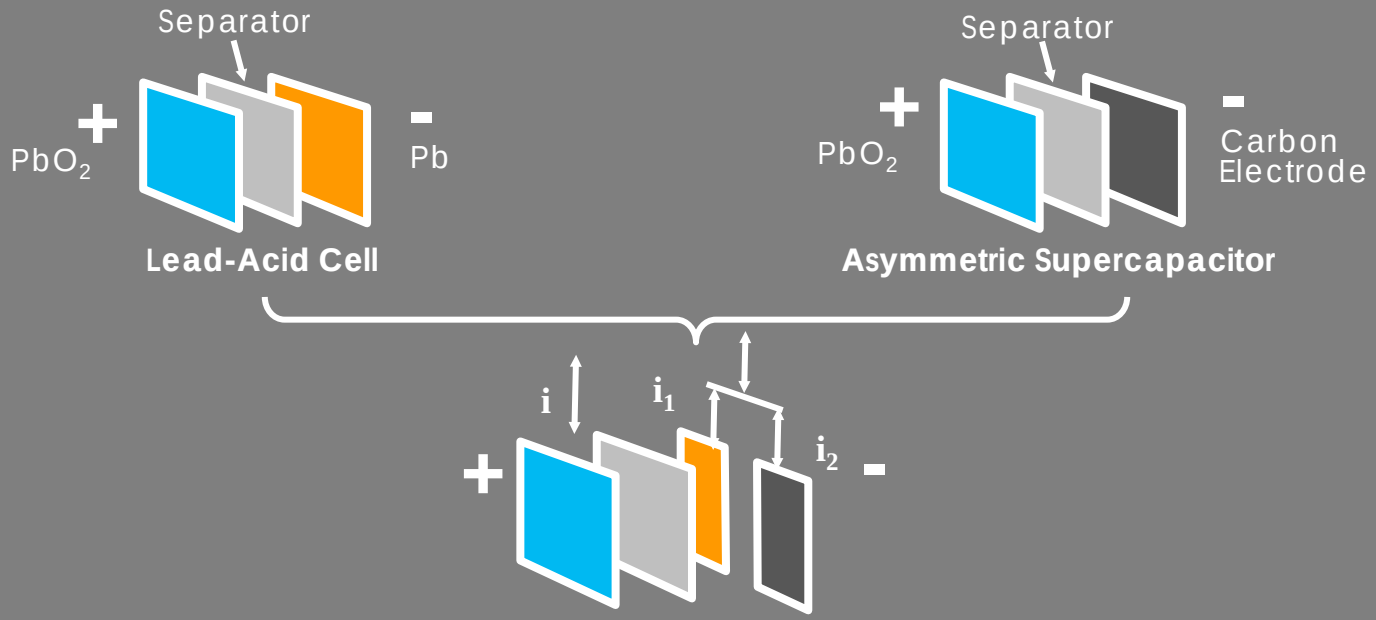

EAST PENN manufacturing co., inc.

ecoult energy storage solutions

UltraBattery®

The New Dimension in a Lead Acid World

Deka unigy UltraBattery

Starter Battery
Market Size:
$15B

Motive Battery
Market Size:
$3.5B

Standby Battery
Market Size:
$6B

PSOC UltraBattery
New Lead-Acid Market

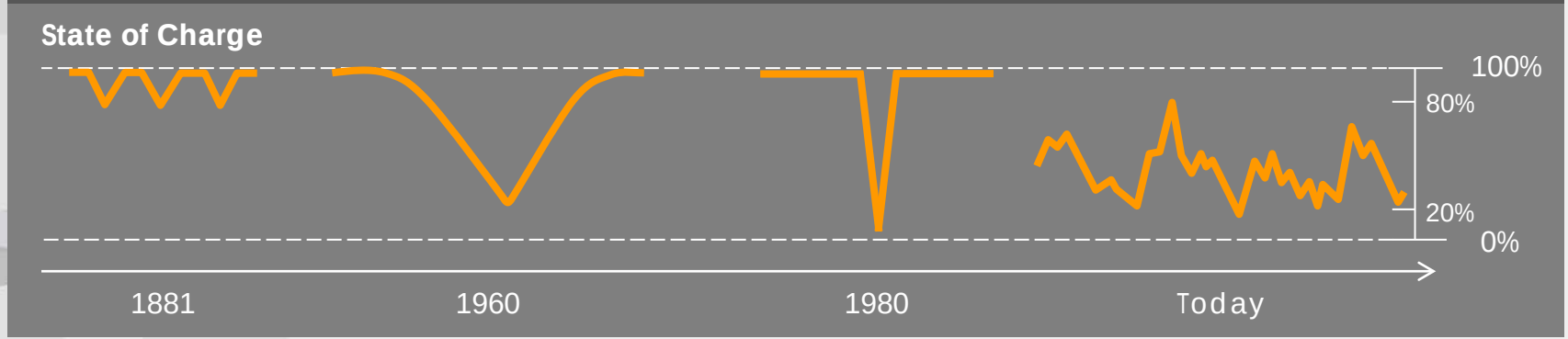

EAST PENN manufacturing co., inc. | ecoult energy storage solutions

Electrical Single Line Diagram

PJM Frequency Regulation Project

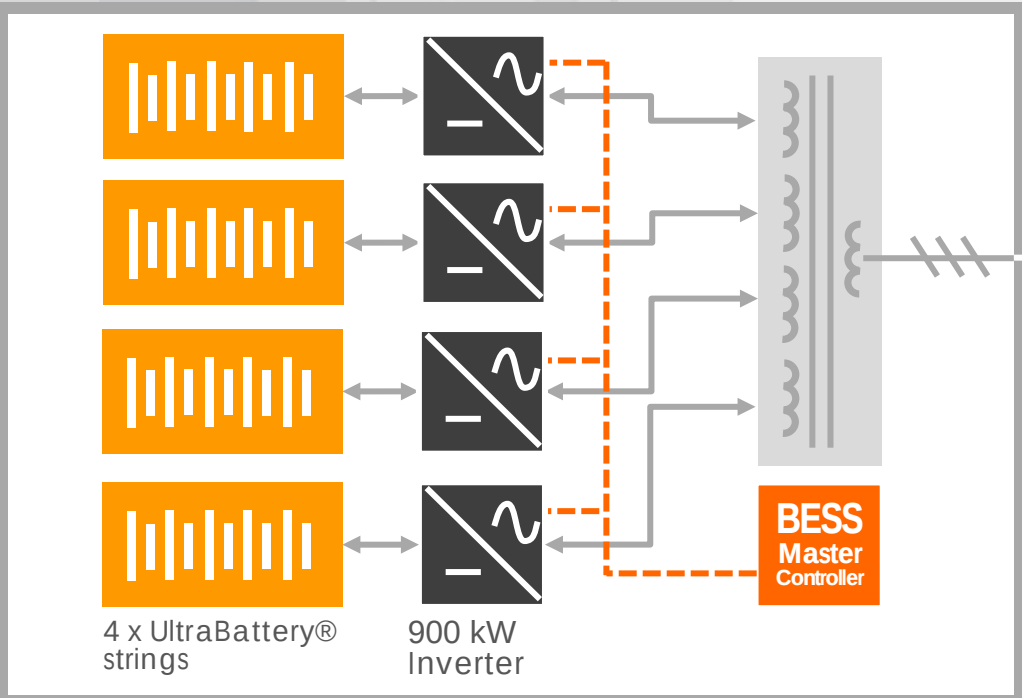

3 MW Frequency Regulation Installed at EPM

3.6 MW BES System for 3MW of Frequency Regulation

EAST PENN manufacturing co., inc. | ecoult energy storage solutions

Communications Framework

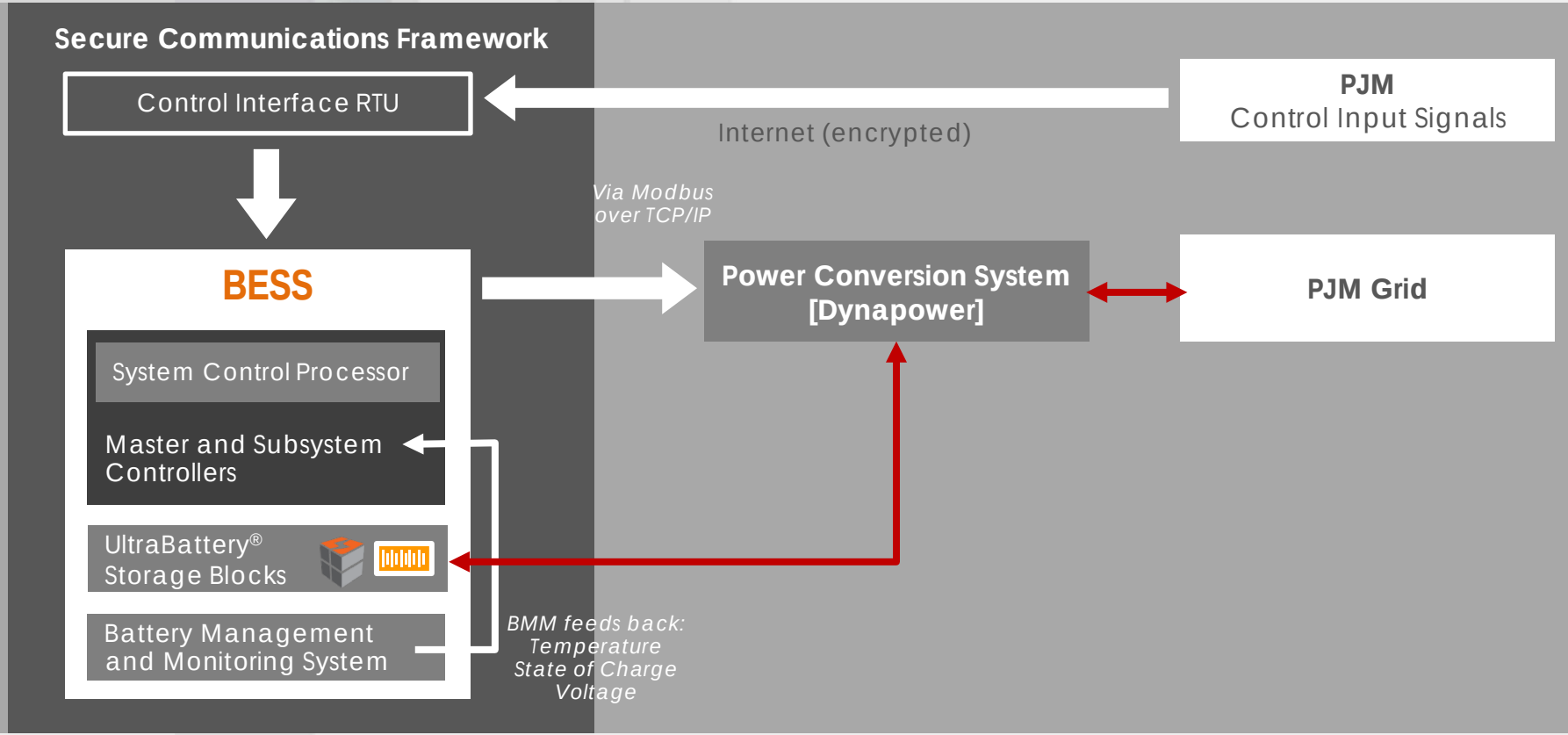

Commissioned on 15 June 2012

Deka unigy UltraBattery

EAST PENN manufacturing co., inc.

ecoult energy storage solutions

Operation Update

Deka unigy UltraBattery

Staged Introduction

- ☑ Observed Runs of 8, 16, and 24 hours at various power levels, including full 3MW rating
- ☑ Bidding into PJM open market

EAST PENN manufacturing co., inc. | ecoult energy storage solutions

Accuracy of Signal

Deka unigy UltraBattery

PJM Request and BESS Response for Aug 30, 2012

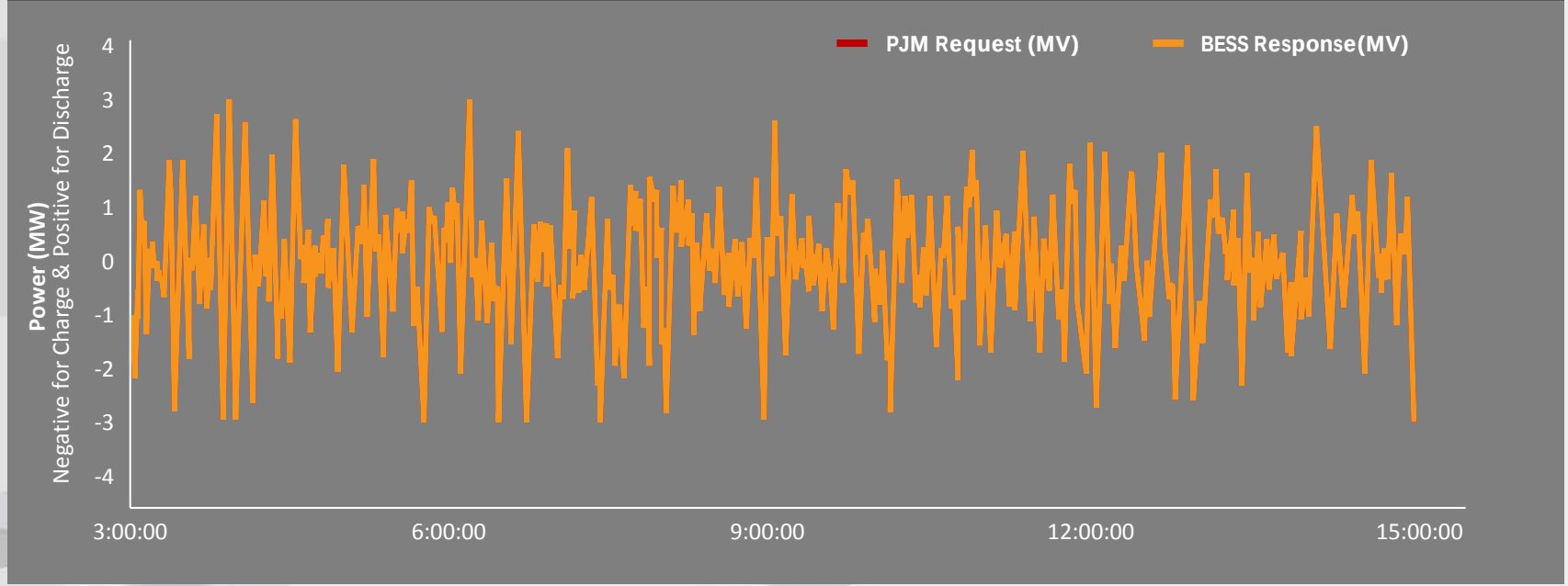

EAST PENN manufacturing co., inc.

ecoult energy storage solutions

State of Charge

Deka unigy UltraBattery

String SOC – Aug 30, 2012

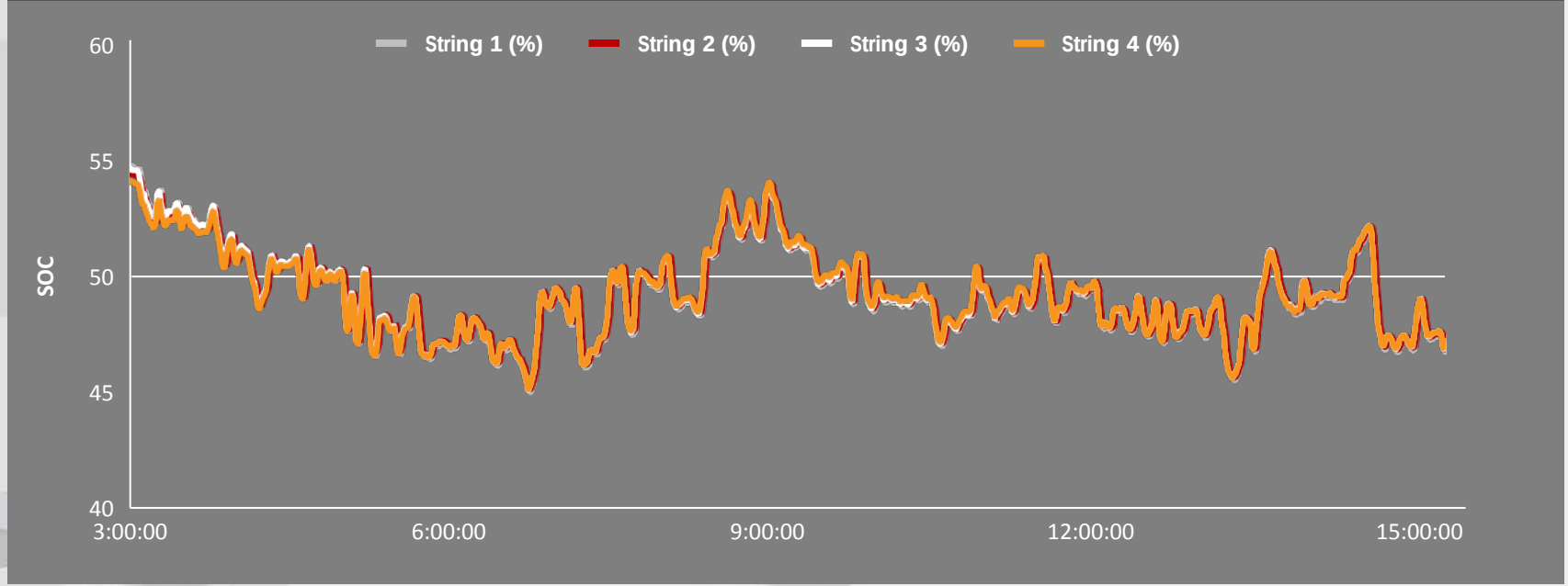

EAST PENN manufacturing co., inc.

ecoult energy storage solutions

Voltage

Deka unigy UltraBattery

String Voltages – Aug 30, 2012

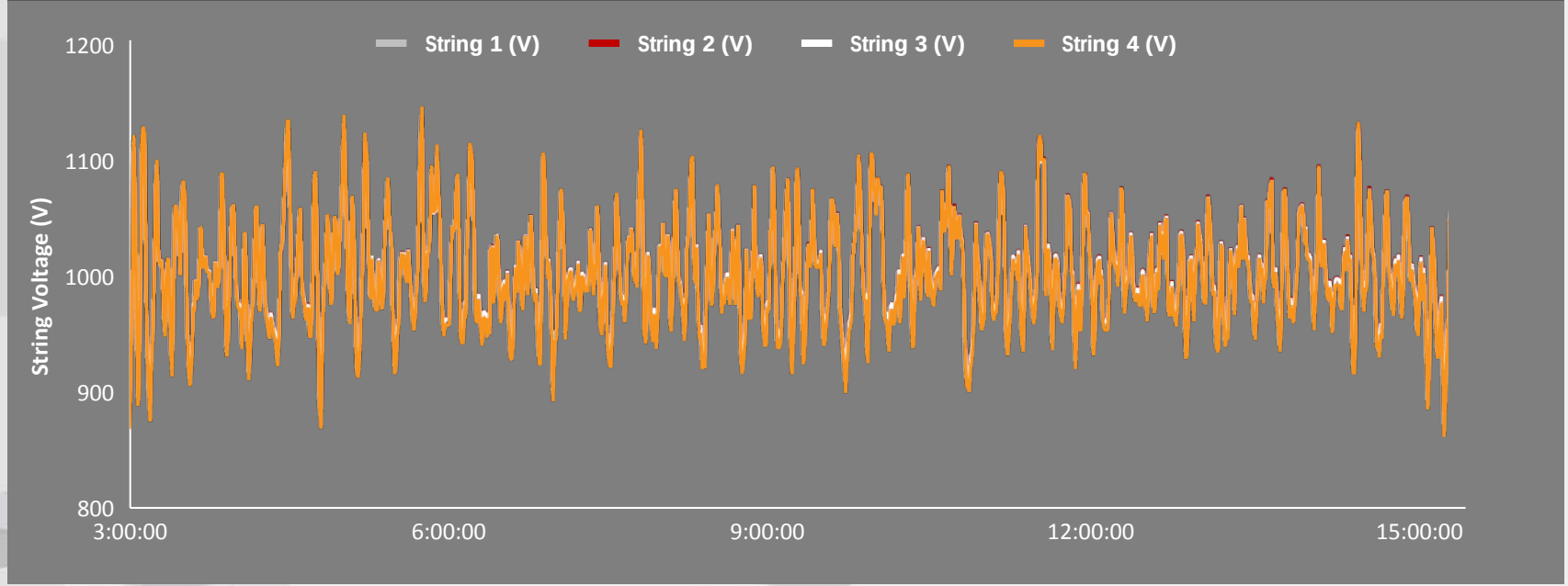

EAST PENN manufacturing co., inc.

ecoult energy storage solutions

Next Steps

Deka unigy UltraBattery

- Accelerated characterization testing still continuing – capacity still at 100%
- Tuning algorithms and SoC management
- Optimising airflow for consistency of temperature across stacks
- Continuous operation with Flexible Bid Strategy

EAST PENN manufacturing co., inc. | ecoult energy storage solutions

Ecoult and UltraBattery®

The Energy Storage Solution of Choice

THANK YOU

John Wood
CEO Ecoult
john.wood@ecoult.com

Jeff Seasholtz
Project Manager
jseasholtz@eastpenn-deka.com

EAST PENN manufacturing co., inc.

ecoult energy storage solutions

John Wood
Ecoult

Grid-Scale Energy Storage Demonstration for Ancillary Services Using UltraBattery®

PJM Frequency Regulation

EAST PENN manufacturing co., inc.

ecoult
energy storage solutions