NVEnergy Storage Study

Jim Ellison jelliso@sandia.gov, Dhruv Bhatnagar dbhatna@sandia.gov | Sandia National Laboratories
Nader Samaan Nader.Samaan@pnnl.gov , Chunlian Jin Chunlian.Jin@pnnl.gov , Tony Nguyen Tony.Nguyen@pnnl.gov, Xinxin Guo Xinxin.Guo@pnnl.gov | Pacific Northwest National Laboratory

We would like to thank the Energy Storage Program in the DOE Office of Electricity for its support in this work.

Objectives

To answer the following questions:

- Is there a business case for energy storage in Nevada?
- What value can energy storage provide to Nevada in the face of increasing renewables penetration?
- What is the appropriate type, size, and location to maximize this value?
- Does sub-hourly production cost modeling show improved value and performance for energy storage relative to traditional hourly modeling?

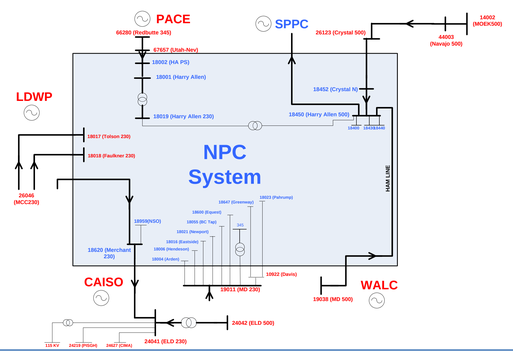

Interties of the southern Nevada power system.

Study Methodology

- Develop a full nodal production cost model of the Nevada Energy system (as planned in 2020) based on WECC TEPPC 2020 model.
- Evaluate whether the planned level of regulating reserves are appropriate.
- Dispatch generation fleet to meet projected 2020 load, observing reserve requirements.
- Evaluate scenario options relative to reference system.
  - Hourly and sub-hourly analysis
  - Sensitivities: natural gas price increases, carbon pricing, coal unit shutdowns, RE penetration
- Interpret results for the NVEnergy system.

Study Progress

- 2020 Nodal model built for NVEnergy System
- Interties and interconnection, pricing and flows integrated for energy interchange
- Initial storage evaluations underway at hourly and sub-hourly simulation horizons (80% efficient, 8 hour pumped storage).

Preliminary Results

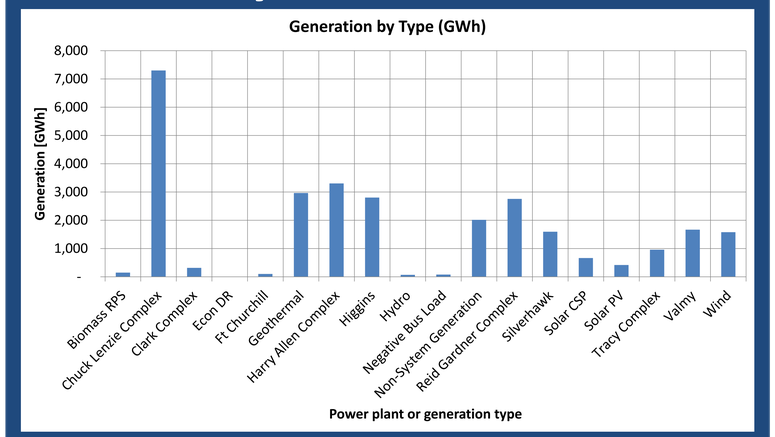

Generation [GWh] by power plant or generation type.

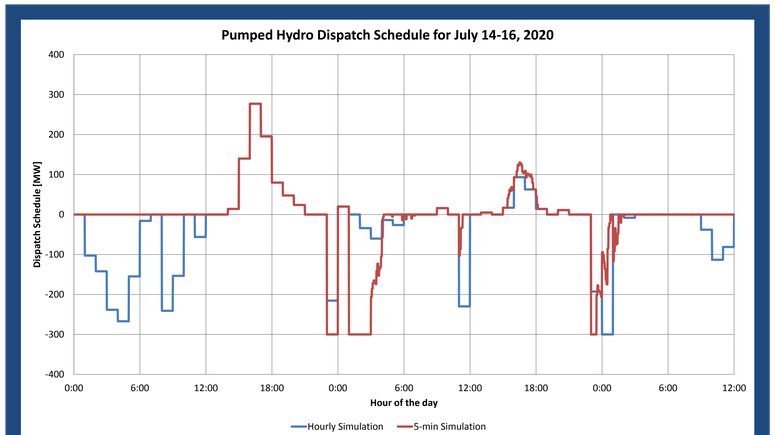

A new pump storage unit's operation in the 2020 model.

System Setup

- 2020 NVEnergy System
- 22% Renewable RPS: Solar (PV & CSP), Wind, Geothermal
- Nodal model with transmission congestion considered
- High-resolution model
  - 5 min unit dispatch should allow the real value of storage to be represented for:
    - Ancillary services
    - Wind and solar Integration

Assumptions

- Current expected 2020 generation fleet
- 2007 load represents 2020 load expectation
- CSP, PV and Wind implemented to meet RPS
- Model based on TEPPC nodal WECC 2020 case with generator details provided by NVEnergy

Energy Storage Scenarios

- Current Study
  - Pumped hydro: 300 MW 8 hr DFIG machines
  - Batteries
- Future Study
  - Flywheel
  - Compressed air

Next Steps

1. Calibrate model to NV Energy's 2007 system dispatch and interchange data.
2. Run and analyze calibrated model to determine optimal storage type, locations, and sizing.
3. Develop list of scenarios (storage facilities) to add to the 2020 model.
4. Run the 2020 scenario model hourly and sub-hourly.
5. Present results.

Sandia National Laboratories is a multi-program laboratory managed and operated by Sandia Corporation, a wholly owned subsidiary of Lockheed Martin Corporation, for the U.S. Department of Energy's National Nuclear Security Administration under contract DE-AC04-94AL85000.
SAND No. 2011-XXXXP