Flexible AC Transmission Systems with Dynamic Energy Storage

Magnus Callavik (ABB) — Västerås, Sweden, — magnus.callavik@se.abb.com
Bertil Nygren, Willy Hermansson, Jan Svensson & Per Halvarsson (ABB); Jim McDowall (Saft)

Summary
ABB and Saft have developed a new high voltage dynamic energy storage based on high voltage Saft Li-ion batteries and ABB:s STATCOM SVC Light® . After tests at ABB laboratories, where its performance to specification was confirmed, the first pilot will be installed in the field in EDF Energy's distribution network in Martham, United Kingdom during 2009 to demonstrate its capability under a variety of network conditions, including operation with nearby wind generation. The aim of this paper is to describe the system, cf. Figure 1, system tests and the feasibility and added value of incorporating Li-Ion energy storage in a Flexible AC Transmission System (FACTS).

ABB:s SVC Light® with Energy Storage
The new system combines dynamic energy storage provided by Saft's 5.2 kV battery with ABB:s SVC Light® for reactive power compensation and dynamic voltage control. The SVC Light utilizes a Voltage Source Converter (VSC) connected in shunt to the grid at both distribution and sub-transmission level, depicted in Figure 2.

VSCs have long been used in industrial drives, where induction motors are fed from frequency-controlled VSCs. VSC technology such as SVC Light® has the advantage of being able to almost instantly change its operating point within its four-quadrant power circle if an energy source is included. This can be used to support the grid with the best mixture of active and reactive power during stressed conditions. In many cases, a mix of active and reactive power is the best solution compared to active or reactive power only. VSC systems can therefore give added support to the grid. Active power modulation damping can be up to ca. 4 times more effective than reactive power modulation damping. Furthermore the local load capacity can increase with twice the MVA rating of the installed converter [1]. Furthermore, the benefits with a VSC transmission system during a grid restoration can be considerable since it can control voltage and stabilize frequency when active power is available at the remote end. In order to match the very high power ratings required by the VSC modules, series-connection of Insulated Gate Bipolar Transistors (IGBTs) is employed. A number of plants for considerably high power and voltage, based on the VSC technology have been built for both industrial [2-5] and power system applications [6-9]. Today, the upper power limit is approximately ±120 MVA. In combination with a dynamic energy storage system it will enable simultaneous control of voltage and active power flow in the electric grid.

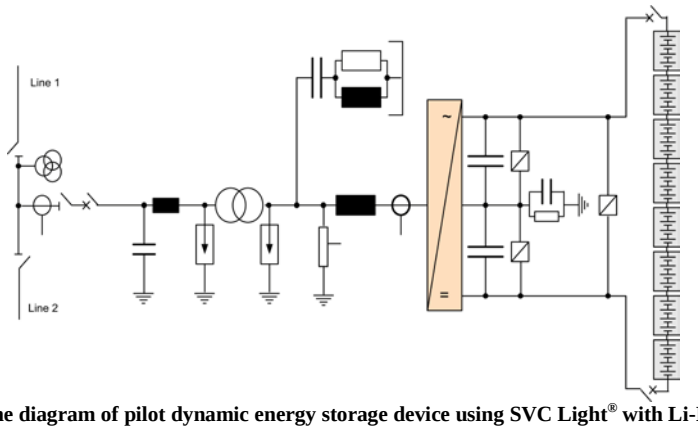

Figure 1 Single-line diagram of pilot dynamic energy storage device using SVC Light® with Li-Ion battery string

Figure 2. ABB:s Variable Source Converter with several series-connected IGBT devices

DC Energy Storage

The DC-side voltage of a converter (pole-to-pole) with capacitors must not be lower than a minimum voltage level in order to function properly without resulting in over-modulation. The obtainable energy is proportional to the capacitance value and to the square of the DC side voltage. There is a trade-off between the DC-side voltage variation and the size of the capacitor. The valve cost increases as the maximum DC-side voltage increases and of course the cost of the capacitor increases as the size goes up. Therefore, there is a practical maximum size of the capacitor energy storage.

If a high amount of energy is needed and the required discharge time is in the range of minutes to hours, a preferred alternative is to add batteries on the DC-side. Compared with capacitor energy storage, batteries keep an almost constant voltage independently of the charge level. However, a drawback is that the lifetime, defined as maximum number of charge/discharge cycles, is limited.

Since SVC Light is designed for high power applications and series-connected IGBTs are used to adapt the voltage level, the pole-to-pole voltage is high. Therefore, a large number of battery cells must be connected in series to build up the required voltage level in a battery string. To obtain higher power and energy, a number of parallel battery strings can be added as indicated in Figure 3. In the first installation described in this paper the DC voltage has been limited to 5.2 kV with a corresponding stored energy of 200 kWh during a one hour discharge.

Thus, a device with both capacitors and batteries can modulate both reactive power (Q), as an ordinary SVC Light, and active power (P) due to the batteries. The grid voltage and the VSC current set the apparent power of the VSC, whereas the energy storage requirements decide the battery size. As a consequence, the peak active power of the battery may be much smaller than the apparent power of the VSC: for instance, 10 MW battery power for an SVC Light of 30 MVA.

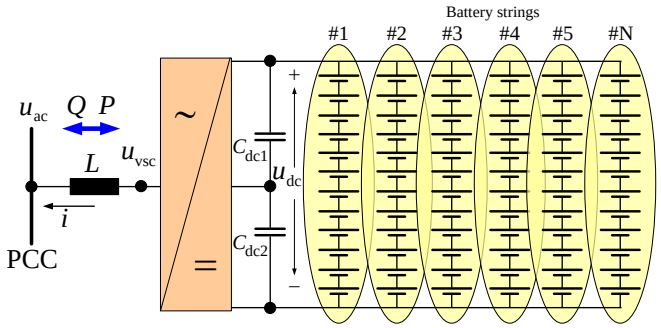

Figure 3. Example of Dynamic energy storage device using SVC Light® with parallel battery strings, consisting of series-connected battery cells

High Voltage Li-Ion Battery System and Control

Li-ion battery technology offers a number of important features in this application, such as: excellent cycling capability; long calendar life; high energy density; very short response time; high power capability both in charge and discharge; and maintenance-free design [10]. Furthermore, Saft's Li-ion technology provides the system with precise information on the state of charge (SOC) which is derived from the electrochemistry employed and is a vital function in a dynamically operating energy storage system.

The battery system comprises eight individual units based on Saft's Intensium Flex modular, rack-mounted Li-Ion system shown in Figure 4. The units consist of 13 series-connected battery modules, each module with 14 battery cells of the type VL41M. Each unit is rated at 624 V and 41 Ah and connected in series. Hence the battery chain of 1456 battery cells achieves a total nominal voltage of 5.2 kV. The complete system can deliver 200 kW for an hour or 600 kW for over 10 minutes. Further data on the battery system is shown in Table 1. Typical discharge cycles made during system validation are shown in the Experimental section.

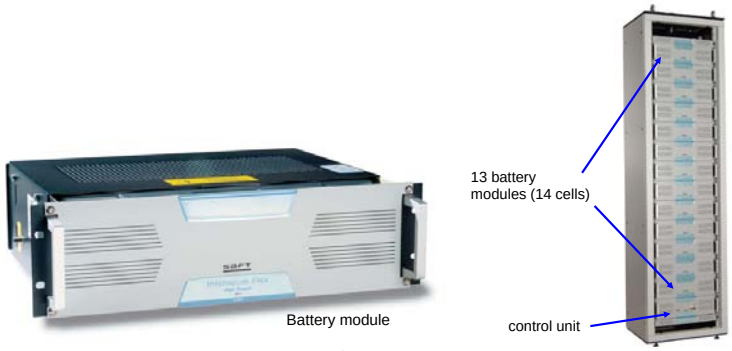

Figure 4. Saft's Intensium Flex rack-mountable Li-Ion module (left) and right) the rack with 13 Li-Ion modules and one battery management module

The proven calendar life time of the Li-Ion cells are 20 yrs with 3000-5000 cycles at a depth of discharge of 80% or 1 million cycles at a depth of discharge of 3%.

Saft is also supplying the control and management devices for the battery (BMM), as well as a CAN-based optical communication interface to ABB's MACH-2 controller that monitors the battery continuously and optimizes its operation. The 11 kV pilot system can deliver both 600 kvar inductive and capacitive reactive power and independently control the active power from the battery.

The MACH-2 main controller will control the discharge and charge of the battery system depending on the actual demand from the grid and the battery status. The system can deliver active power to the grid by discharging the batteries and also consume active power by charging the batteries. By the MACH-2 controller the DC-breakers and disconnectors for connecting/disconnecting the battery to the SVC Light® converter are also operated.

Table 1. Data on the battery system

Cell type	**Saft Li-ion VLM41**	Energy	**25 kWh**
No of modules per unit	**13**	Max continuous discharge current	**150A**
No of cells per module	**14**	Max pulse current 30 s	**300 A**
Nominal voltage per unit	**624 V**	Max charge current	**40 A**
Open circuit voltage @ SOC=100%	**728 V**	Size	**600x455x2285 mm**
Capacity	**41 Ah**	Weight	**440 kg**

Experimental Results

Some tests were made at ABB laboratories to verify the performance of the system. Figure 5 shows the battery system mounted in a container at the ABB Laboratories.

Figure 6 shows graphs of discharge of 200 kW for 1 h and shows an example of 600 kW discharge for 4 min. In these tests the MACH-2 controller is set to keep the power constant, which results in a steadily increasing discharge current when the battery voltage decreases during the discharge.

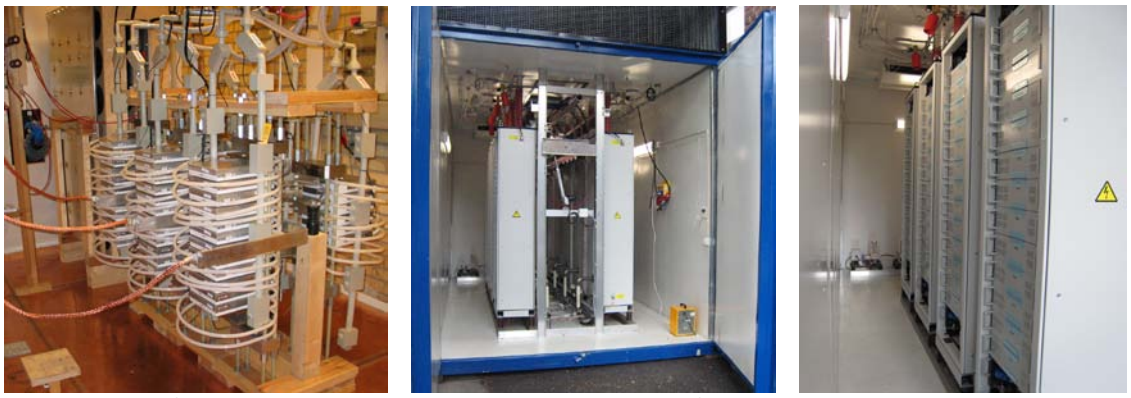

Figure 5. Details of series connected IGBT:s, battery container and details of battery units located in the container during laboratory tests of the whole system

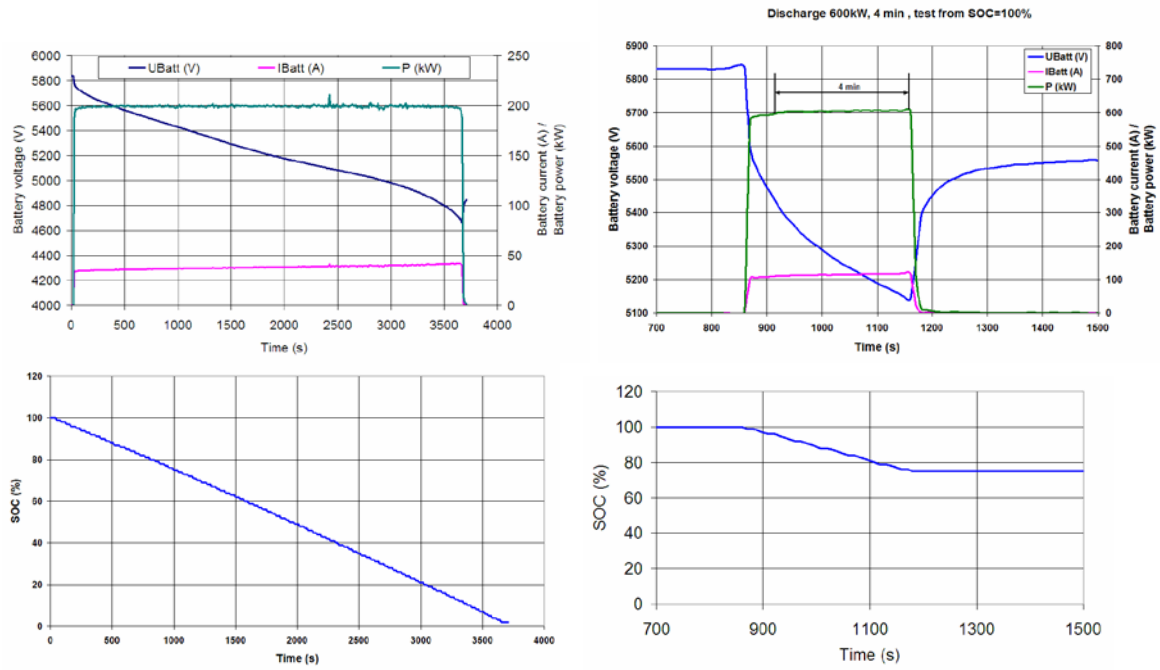

Figure 6. Left curves show discharge of 200 kW, 1 h from SOC=100%.
Upper left diagram: Battery voltage, current and power during the discharge, Lower left diagram: State-of-charge (SOC)
Right curves show discharge of 600 kW, 4 min from SOC=100%.
Upper right diagram: Battery voltage, current and power during the discharge, Lower right diagram: State-of-charge (SOC)

Figure 7 shows an example of battery charging from SOC= approx. 50% up to fully charged at 100%. The charging follows a special procedure in order to avoid overvoltage and overcharging of the battery cells and allow cell balancing to achieve a good homogeneity among the cells. At the start the charging is made with a maximum current of 40 A (set by the battery BMMs), and at a level of SOC > approx. 80% the maximum charging current is reduced down to 20 A (determined by the limit value as received from the BMMs) and finally when the total battery voltage reaches 5 840V, corresponding to 4.01 V/cell, the control shifts and keeps the battery voltage constant at this level until a charge at 100% is reached.The BMMs automatically take care of the cell balancing throughout the charging period.

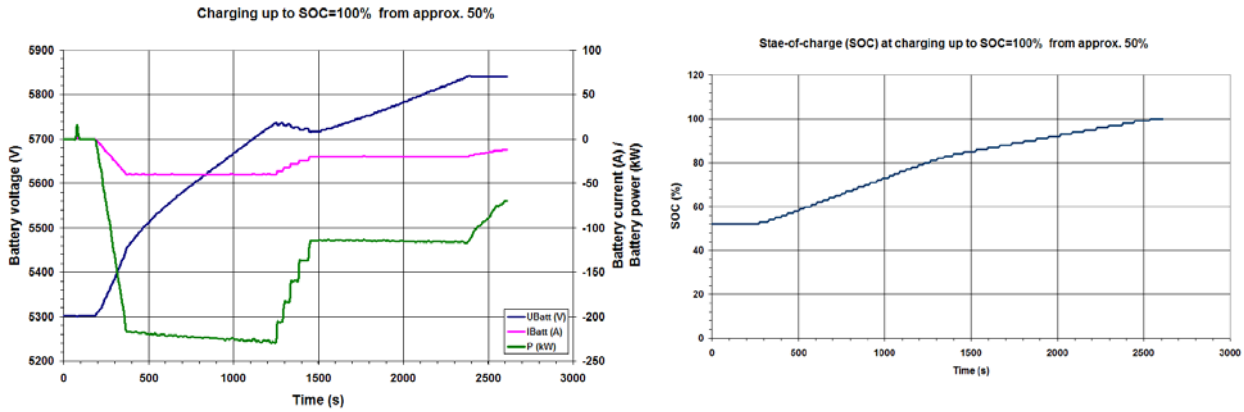

Figure 7 Charging from SOC=approx. 50% to 100%.. Upper curves: Battery voltage, current and power during the discharge, Lower curve: State-of-charge (SOC)

FACTS and Energy Storage Applications

FACTS devices are common in the electric grid. The flexibility to connect these relatively compact devices, as shown in the layout in Figure 8, in multiple locations in the grid together with the already high penetration makes this a promising technology for large-scale integration of energy storage devices at strategic locations to enhance existing grid infrastructure.

The integration of dynamic power compensation systems based on advanced electric energy storage systems enable development of several applications for the future intelligent electric grid system such as: support of grid with best mixture of both active & reactive power (P&Q); active damping of power oscillations; defer transmission and distribution upgrades; control voltage and stabilize frequency during grid restoration; frequency control not limited to conventional power plants; support grid during contingencies; primary power (spinning reserve); island operation; voltage stability; harmonic filtering; load balancing; flicker compensation; and power factor correction.

The field installation is in a distribution network close to a small windfarm in Martham, UK. Typical uses of a battery based electric storage systems in grids connected to wind power farms could be: transmission curtailment for mitigation of constraints imposed by insufficient transmission capacity; time-shifting to store energy generated during periods of low demand and for discharge during periods of high demand; forecast hedging to mitigate penalties when the real time generation does not agree with the amount of generation bid for delivery; grid frequency support requiring direct reserve to mitigate imbalance between the wind generation and load; and fluctuation suppression requiring continuous response to wind fluctuations [11-13]. In weak grids an energy storage system may also be required to modify maximum ramp rates to meet grid connection requirements. In future smart grids energy storage systems will also be one important ingredient.

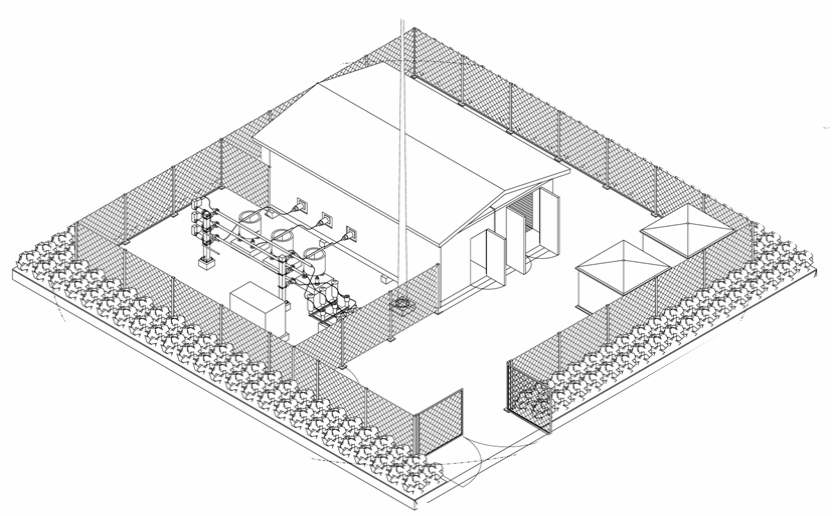

Figure 8. Layout of Martham substation pilot

References

[1] S. Johansson et al, "Power System stability benefits with VSC DC-transmission systems," *Cigré conference, Paris, France,* August 29 - September 3, 2004.

[2] R. Grünbaum, et al, "SVC Light: Evaluation of first installation at Hagfors, Sweden," CIGRÉ conference, paper 13/14/36-03, Paris, France, 2001.

[3] T. Larsson, B. Ratering-Schnitzler, "SVC Light: A utility's aid to restructuring its grid," IEEE PES winter meeting, Singapore, January 2000.

[4] R. Grünbaum, et al, "STATCOM, a prerequisite for a melt shop expansion – performance experiences," IEEE Power Tech, Bologna, Italy, June 23-26, 2003.

[5] R. Grünbaum, et al, "FACTS: Powerful means for dynamic load balancing and voltage support of AC traction feeders," IEEE Power Tech, Porto, Portugal September 10-13, 2001.

[6] T. Larsson, et al, "Eagle Pass Back-to-Back tie: a dual purpose application of voltage source converter technology," IEEE PES summer meeting, Vancouver, Canada, July 2001.

[7] U. Axelsson, et al, "The Gotland HVDC Light project – experiences from trial and commercial operation," CIRED conference, Amsterdam, The Netherlands, June 18 – 21, 2001.

[8] B. D. Railing, et al, "Cross Sound cable project second generation VSC technology for HVDC," CIGRÉ conference, Paris, France, August 29 - September 3, 2004.

[9] M. P. Bahrman, et al, "Voltage source converter transmission technologies – The right fit for the Application," IEEE PES general meeting, Toronto, Canada, July 13 – 18, 2003.

[10] J. McDowall, et al, "The Practical Application of Lithium Ion Batteries in Energy Storage and Other Stationary Applications," EESAT 2000

[11] "Energy Storage for Grid Connected Wind Generation Applications", EPRI-DOE Handbook Supplement, 1008703, Dec. 2004.

[12] K S Kook et al, "A Study on applications of Energy Storage for the Wind Power Operation in Power Systems", Power Engineering Society General Meeting, 2006.

[13] J. McDowall, "Integrating Energy Storage with Wind Power in Weak Electricity Grids," Journal of Power Sources 162 (2006), pp 959–964