Multiport Multi-Directional Modular and Scalable Power Conversion Platform with DC/AC Source/Storage Integration

higherwire

Energy Solutions, Elevated

@higherwireinc higherwire.com

Trevor Warren

Dr. Ayan Mallik

SBIR DE-SC0022600

SBIR·STTR America's Seed Fund™ POWERED BY SBA

U.S. DEPARTMENT OF ENERGY

ASU Ira A. Fulton Schools of Engineering Arizona State University

PEACE

The Team

Trevor Warren
Founder, President and CEO

Dr. Ayan Mallik
Professor of Engineering, ASU

Jack Landry
Engineering Lead

HIGHERWIRE MISSION: To create innovative technologies that make renewable energy storage and generation more sustainable and accessible.

higherwire
Energy Solutions, Elevated

LEARN MORE

The Project

Motivation

- To develop a novel power conversion platform for interconnecting renewable energy with energy storage and the AC grid.
- Easily scalable to maximize potential applications and greatly drive down the costs of renewable energy
- Seamless integration of multiple renewable energy resources with existing loads and local storage systems
- Facilitate multi-directional power flow with reduced power conversion stages

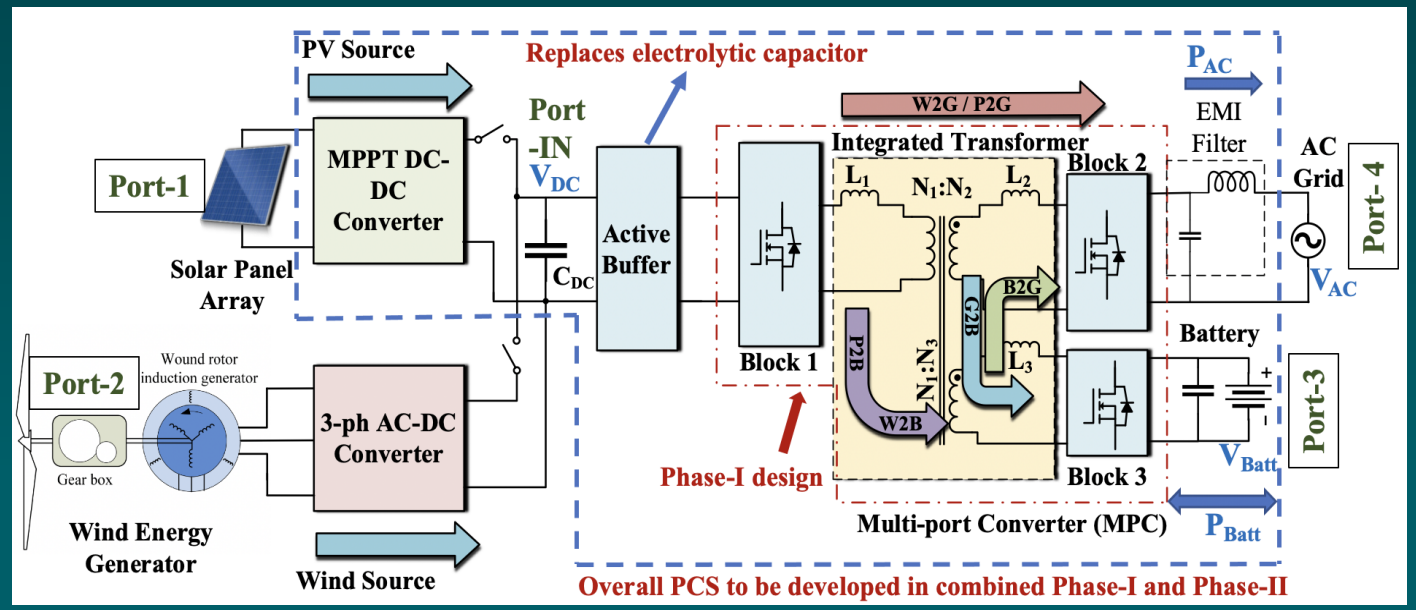

Proposed four-port power conversion architecture

$V_{DC} \in [40, 100]V$;
$V_{ac} = 120V\ RMS$;
$P_{ac} = 1kW$ (max);
$V_{batt} = 28V\ nominal$;
$P_{batt} = \pm 1kW\ (max)$

Design Requirements

higherwire
Energy Solutions, Elevated

LEARN MORE

Impact

- According to NREL, subsidizing residential PV system cost by $3,000 would
  - Increase solar adoption among LMI households by 50% over the next 10 years
  - Increase all residential installations by 25%
  - Generate $69 billion in first-year utility bill savings
- Our solution will significantly drive down the cost and improve the reliability of a typical solar install
- This will spur increased demand in similar fashion to the NREL model without requiring additional government spending.

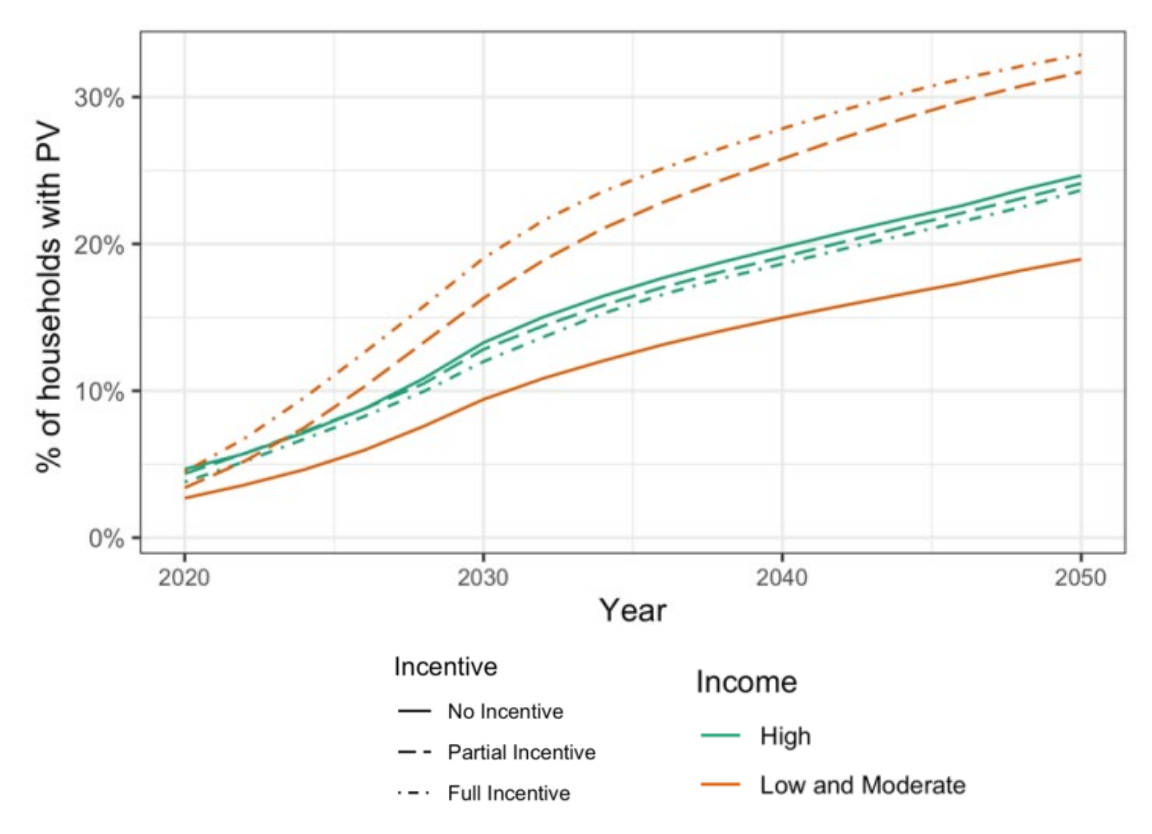

LMI communities constitute 43% of all US households but only 15% of solar adopters. [NREL]

higherwire
Energy Solutions, Elevated

LEARN MORE

Objectives

- Greater than 95% efficiency
- 6.1kW/L power density
- As compared to existing technologies
  - Longer mean time to failure
  - 40% reduction in cost
  - 30% reduction in volume
  - Up to 20°C operating temperature
- Develop a passive thermal management system using phase-change material (PCM) for high-density energy storage

Proposed Project Features

- Triple-active bridge converter with three ports integrating renewable source, battery and grid.
- Adjustable Modes of Operation to Minimize the Conduction and Switching Losses
- Soft Switching at Nominal Condition Facilitated by multivariable control technique
- Power Split optimization among multiple energy sources or sinks
- Controllable Leakage Integrated three winding Planar Transformer

higherwire
Energy Solutions, Elevated

LEARN MORE

PCB Design

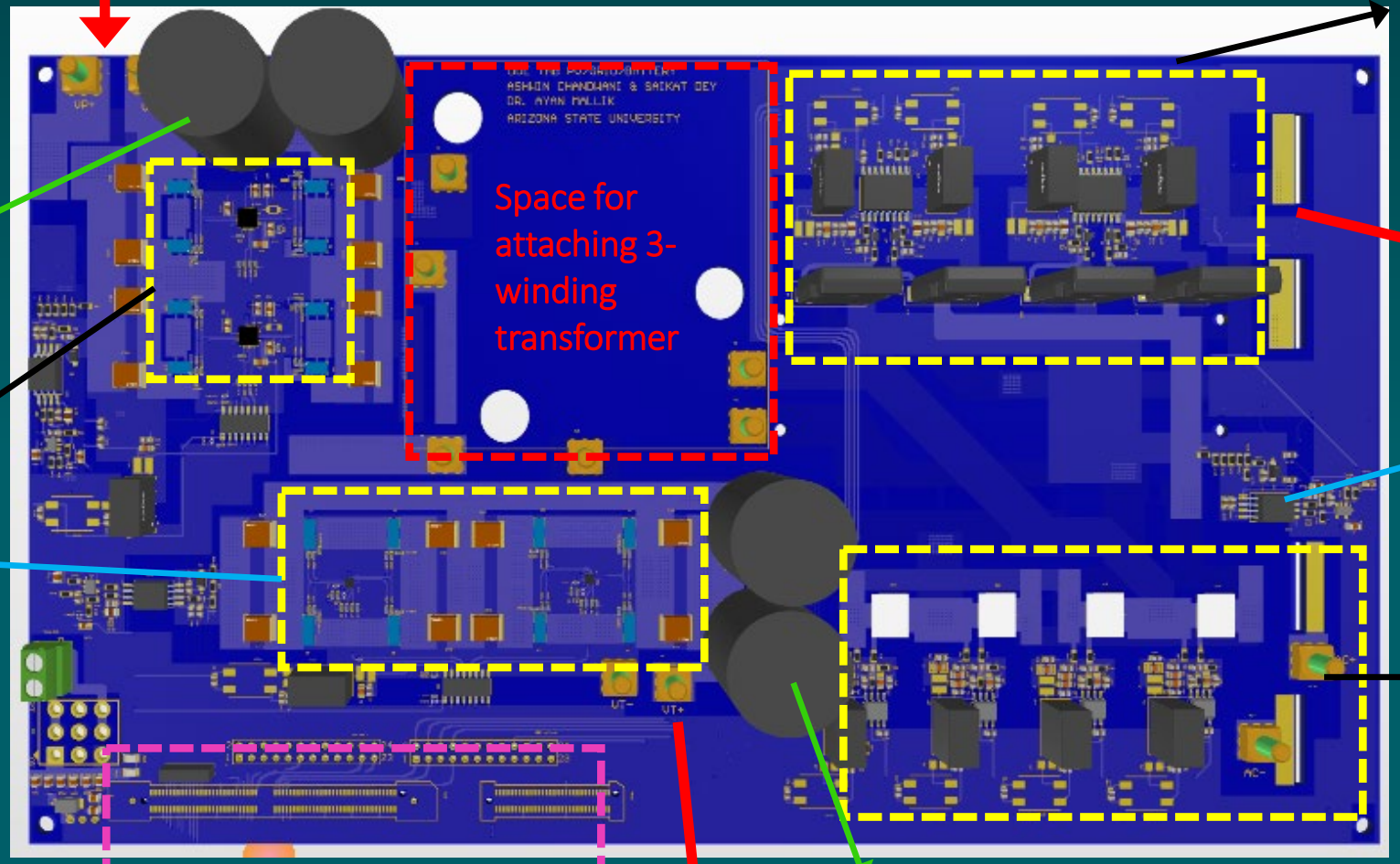

DC input port (PV side)

650V SiC Unfolder H-Bridge and associated isolated Gate Drivers and their power supplies

AC output port (Grid side)

Input/Primary side DC link Capacitors

Primary side 100V GaN H-Bridge with 2 paralleled devices

AC voltage sensor

Secondary side 650V GaN H-Bridge and associated isolated Gate Drivers and their power supplies

Tertiary side 60V GaN H-Bridge with 2 paralleled devices

DSP Control Card slot

DC output port (Battery side)

DC Output /Tertiary side DC link Capacitors

higherwire
Energy Solutions, Elevated

LEARN MORE

Simulation Results

Input source @40V supplying to 120Vac Grid @1kW and 28V LV Battery @1kW

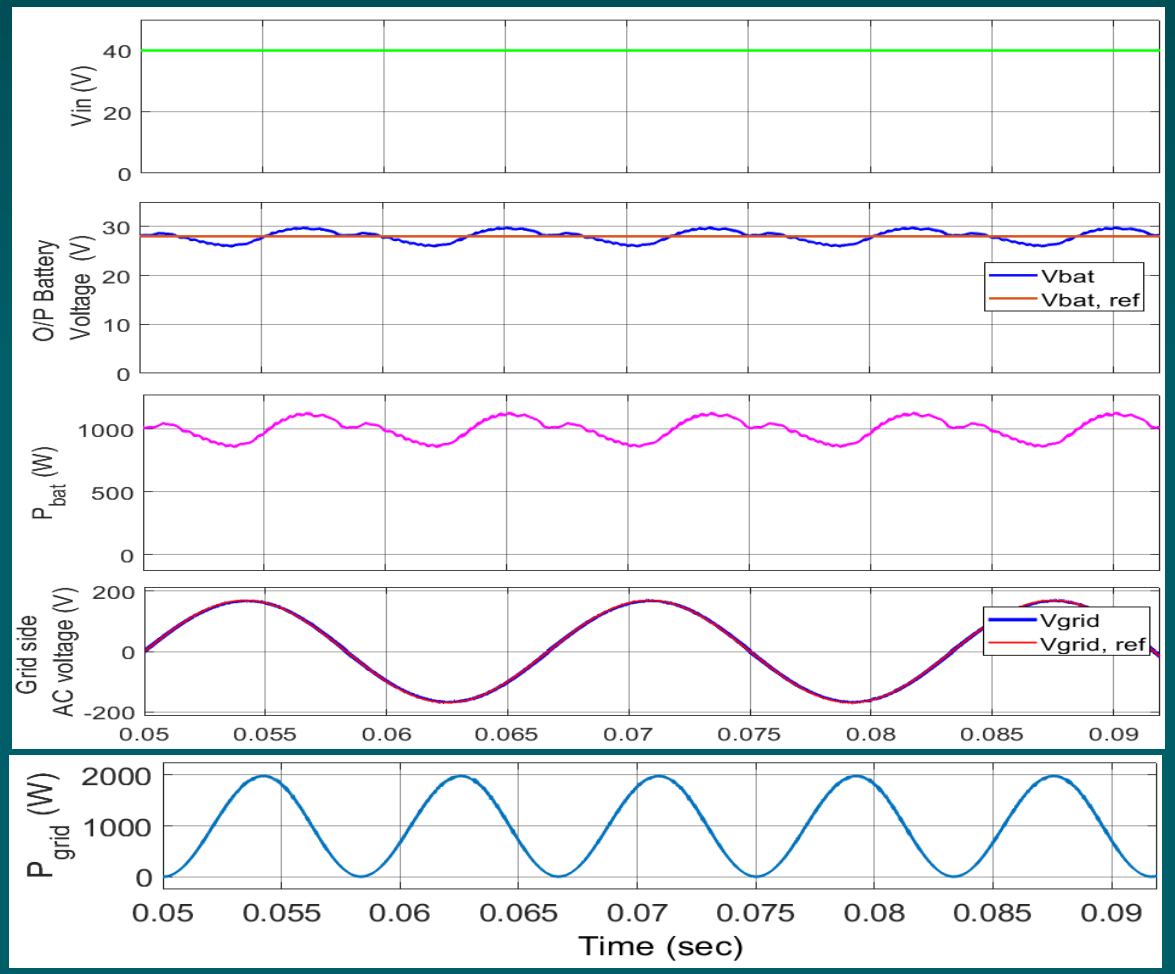

V_{in} =40V

$V_{bat,avg}$ = 28V

$P_{bat, avg}$ = 1kW

V_{grid}=120Vac

$P_{grid, avg}$ =1kW (active power)

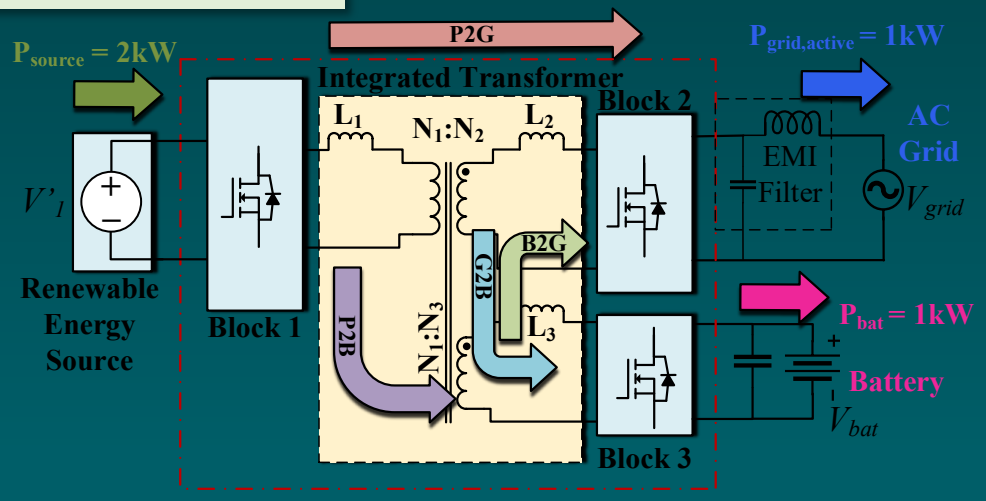

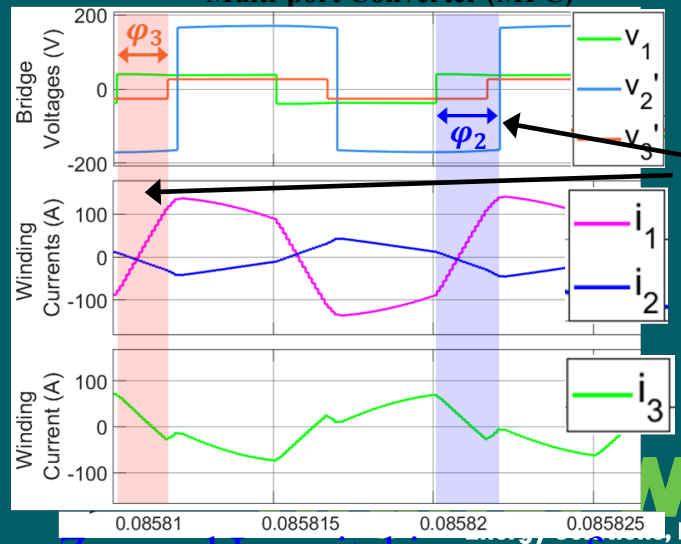

Phase-shifts

Zoomed In switching waveform

Milestones

LEGEND		
COMPLETE	IN PROCESS	FUTURE

Task-1: Design and Development of High-density Energy Storage System and PCM-based Thermal Management System

- **Subtask 1.1.** Energy storage system component identification and order
- **Subtask 1.2.** Energy storage system manufacture
- **Subtask 1.3.** Energy storage system lab testing

Task-2: Design, Control, Modulation Optimization and Hardware Development of Triple Active Bridge Converter

- **Subtask 2.1.** TAB converter modeling, component selection and loss analysis
- **Subtask 2.2.** Switching Modulation Optimization for Maximum Efficiency Tracking in TAB DC-DC Converter
- **Subtask 2.3.** PCB Layout Optimization and Thermal Management System Design

Task-3: Design and Validation of a Volume-Optimized Planar Integrated High-Frequency Transformer with Minimized Stray Effects

- **Subtask 3.1.** Development of inter/intra-winding capacities in the TAB converter
- **Subtask 3.2.** Circuit testing to validate the circuit design

Task-4: Simulation and Experimental based Verification of the DC-DC Stage and EMI Compliance

Next Steps

- Commercialization Plan
  - We have engaged numerous potential stakeholders, including multiple inverter manufacturers and solar integrators
- Phase II submission
  - Manufacture development hardware
  - Team with industry partners to develop a turn-key nanogrid system with 24v battery
  - Field testing in applications in the Southwest
- Pairing with our existing Second Life battery products to further reduce barriers to adoption

higherwire
Energy Solutions, Elevated

LEARN MORE

Acknowledgements

- Arizona State University Ira A Fulton School of Engineering, PEACE Lab
- National Renewable Energy Lab
- Sandia Labs
- Stan Atcitty
- Dr. Imre Gyuk of the US Department of Energy Office of Electricity Energy Storage Program

higherwire
Energy Solutions, Elevated

LEARN MORE