Pumped Hydroelectric Storage Systems

PRESENTED BY
Atri Bera
Sandia National Laboratories

DOE OE Peer Review 2022
Presentation # 505

10/12/2022

Sandia National Laboratories is a multimission laboratory managed and operated by National Technology & Engineering Solutions of Sandia, LLC, a wholly owned subsidiary of Honeywell International Inc., for the U.S. Department of Energy's National Nuclear Security Administration under contract DE-NA0003525.
SAND2022-13878 C

Current Status

- Pumped hydroelectric storage (PHS) — the only long duration energy storage in the market
- PHS — **over 90% of the world's grid-scale energy storage** applications
- Current global installed capacity of PHS — **165 GW**[1]
- Capacity added in 2021 — **4.7 GW**, mostly in China
- U.S. — **43** plants with total installed capacity of **22 GW**[2]

Largest PHS facility in the world — Fengning Pumped Storage Power Station (3.6 GW) in China

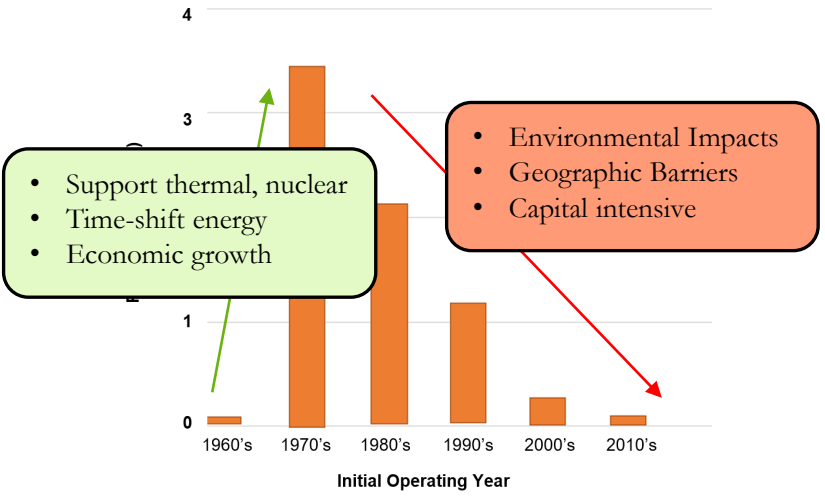

Figure 3. PHS capacity added in the U.S. by initial operating year[5]

Figure 2. Rocky River pumped storage plant on the Housatonic river in Connecticut, operation started in 1929[4]

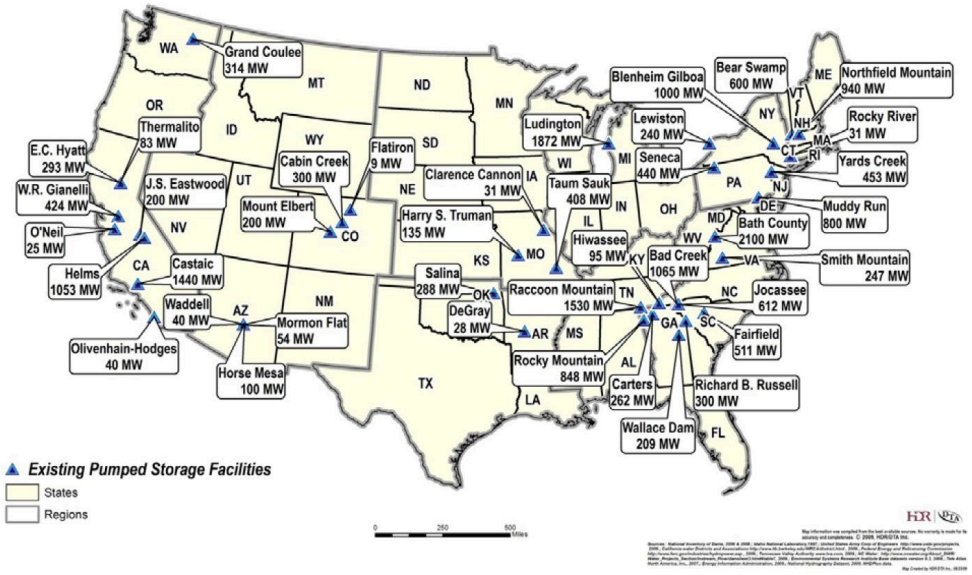

Figure 1. Existing PHS facilities in the U.S[3].

1. 2022 Hydropower Status Report." International Hydropower Association, 2021. Available: https://www.hydropower.org/publications/2021-hydropower-status-report
2. R. U. Martinez, M. M. Johnson, and R. Shan, "U.S. Hydropower Market Report (January 2021 edition)," Oak Ridge National Lab. (ORNL), Oak Ridge, TN (United States), ORNL/SPR-2021/1782, Jan. 2021. doi: 10.2172/1763453.
3. Hydroelectric Pumped Storage for Enabling Variable Energy Resources within the Federal Columbia River Power System — Bonneville Power Administration
4. Rocky River Pumped Storage Hydraulic Plant | ASCE
5. "Annual Electric Generator Report," U.S. Energy Information Association, Oct. 2019.

Deployment

Fixed-speed PHS — Traditional

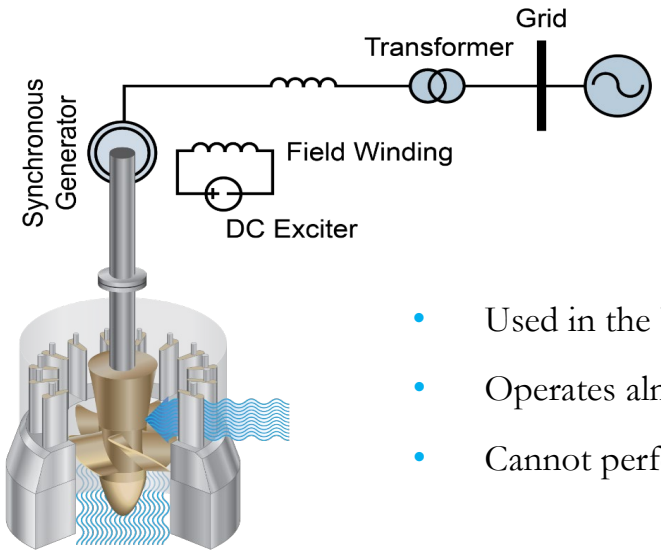

- Used in the U.S.
- Operates almost at a **fixed speed**
- Cannot perform frequency regulation

Adjustable-speed PHS — Flexible

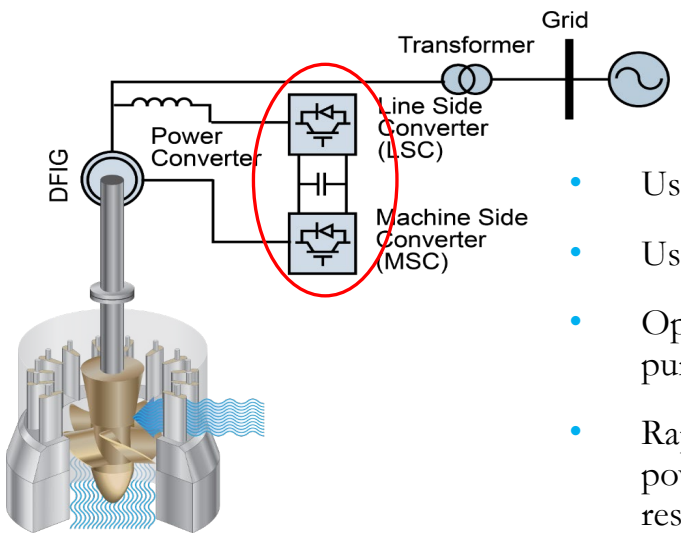

- Used in Japan, China, Europe
- Uses **power electronic converters**
- Operates across greater generating and pumping power ranges
- Rapidly exchange energy with the bulk power system — fast frequency response services

Figure 1. Ludington Pumped Storage facility in Michigan[1]

FS can be upgraded to AS units

Yagisawa PHS plant (Japan) — 87 MW unit was converted from FS to AS in 1990

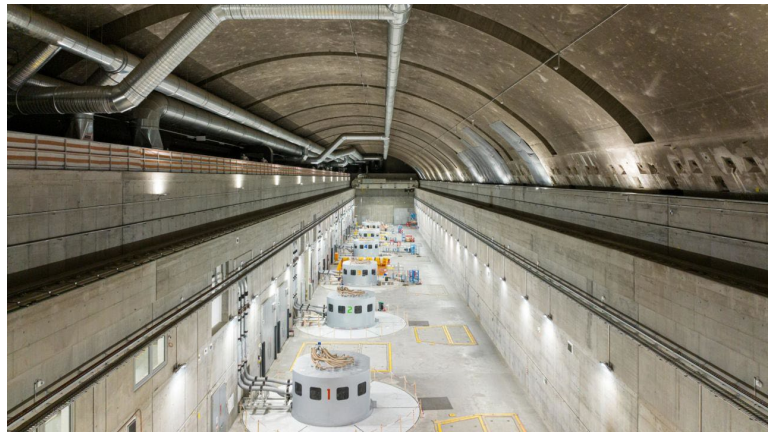

Figure 2. Nant de Drance pumped storage facility in Switzerland[2]

1. Pumped Storage Hydro Electricity | Consumers Energy
2. This giant 'water battery' under the Alps could be a game-changer for renewable energy in Europe | CNN

U.S. PHS — Pipeline (FERC)

- **40 GW** issued preliminary permits by FERC[1]
- **36 GW** pending preliminary permits

- No new projects online since 2012 (Lake Hodges in San Diego, CA)
- No new project under construction
  - Eagle Mountain Hydroelectric Storage Project licensed since June 2014
  - Gordon Butte Pumped Storage Project licensed since December 2016

Issued Preliminary Permits for Pumped Storage Projects

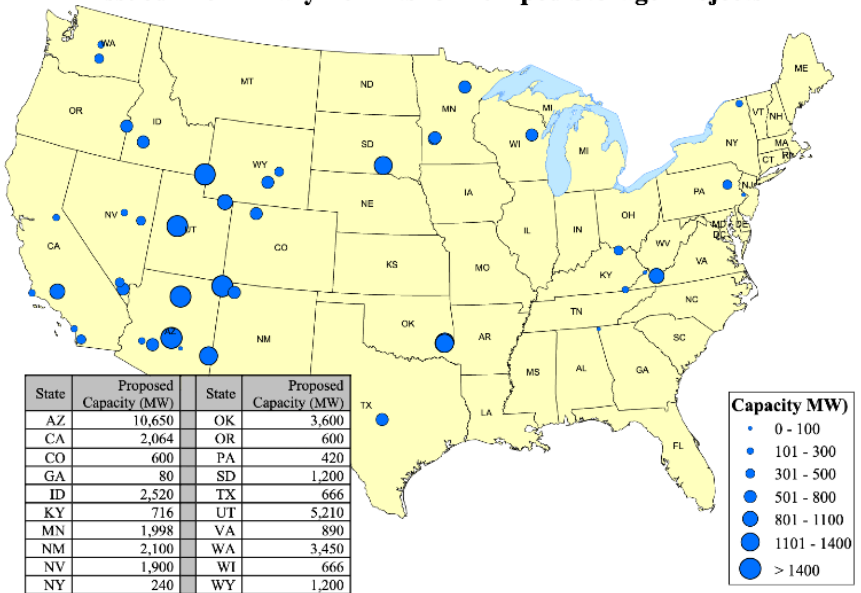

State	Proposed Capacity (MW)	State	Proposed Capacity (MW)
AZ	10,650	OK	3,600
CA	2,064	OR	600
CO	600	PA	420
GA	80	SD	1,200
ID	2,520	TX	666
KY	716	UT	5,210
MN	1,998	VA	890
NM	2,100	WA	3,450
NV	1,900	WI	666
NY	240	WY	1,200
TOTAL CAPACITY			40,770 MW

Source: FERC Staff, May 11, 2022

Pending Preliminary Permits for Pumped Storage Projects

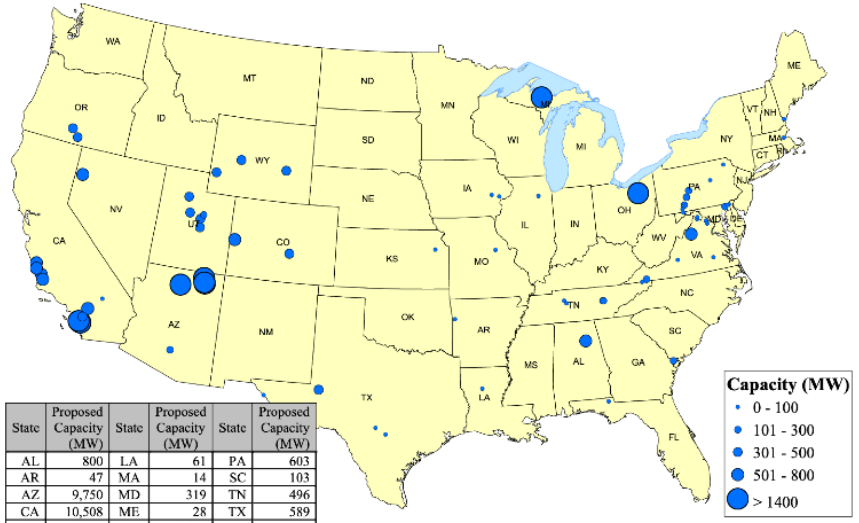

State	Proposed Capacity (MW)	State	Proposed Capacity (MW)	State	Proposed Capacity (MW)
AL	800	LA	61	PA	603
AR	47	MA	14	SC	103
AZ	9,750	MD	319	TN	496
CA	10,508	ME	28	TX	589
CO	1,300	MI	3,488	UT	2,300
FL	20	MO	26	VA	1,127
IA	47	NV	600	WV	17
IL	49	OH	1,500	WY	1,400
KS	42	OR	1,000		
TOTAL CAPACITY				36,234 MW	

Source: FERC Staff, May 11, 2022

1. Pumped Storage Projects | Federal Energy Regulatory Commission (ferc.gov)

Challenges

Why aren't there any new PHS projects in the U.S.?

- Cost — Large engineering projects, capital intensive, long construction duration
- Environmental impacts — Building dams, disruption of aquatic life, flooding
- Geographic barrier — Reservoirs separated by elevation, massive water requirement
- Regulatory issues — multiple licenses required, no investment tax credit
- Valuation — markets lack revenue streams for PHS

Recent Projects — Non-traditional Configurations

- Underground Reservoir PHS — Can use old mine shafts, depleted natural gas formations
- Can be installed in flat areas — eliminating typical geographical challenges
- Lower capital cost

Geomechanical Pumped Storage[1]

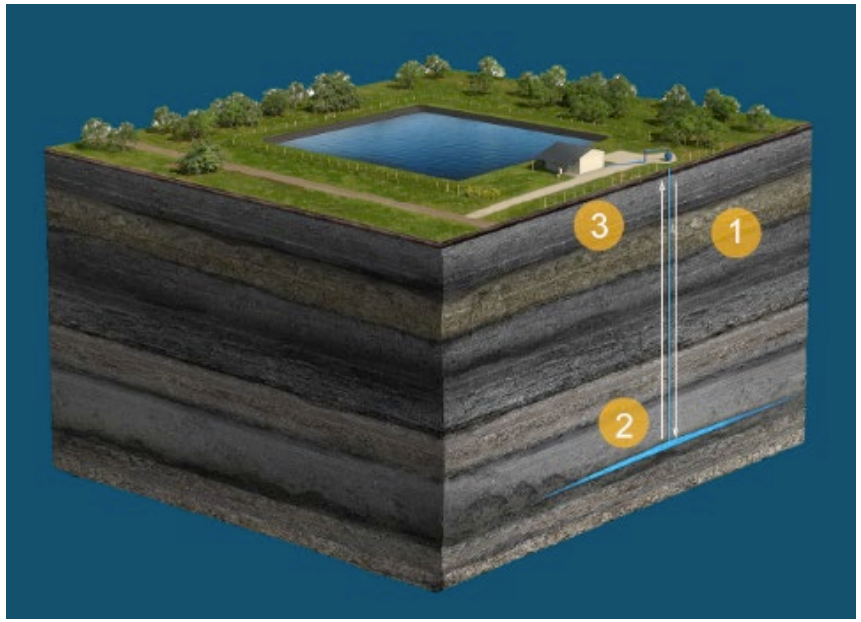

- Being developed by Quidnet Energy and funded by the U.S. DOE
- 1 – 10 MW modules with 10+ hours of storage each

Gravity Power Plant[2]

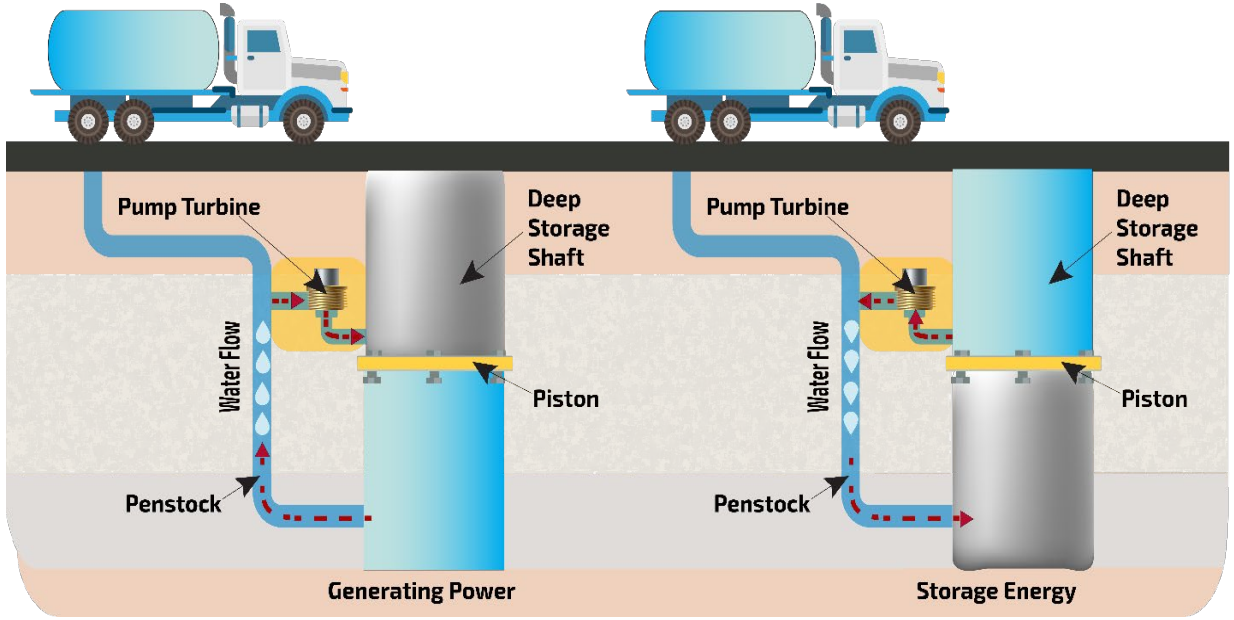

- Being developed by Gravity Power
- Estimated Levelized Cost of Energy lowest among PHS, Hydrogen, Flow, and Li-ion[3] : $ 0.14/kWh for some long duration categories

1. Quidnet Energy – Technology
2. Home - Gravity Power
3. Energy Storage Cost and Performance Database | PNNL

Recent Projects — Non-traditional Configurations

- Aquifer pumped hydro (APH) — uses aquifers as lower reservoirs

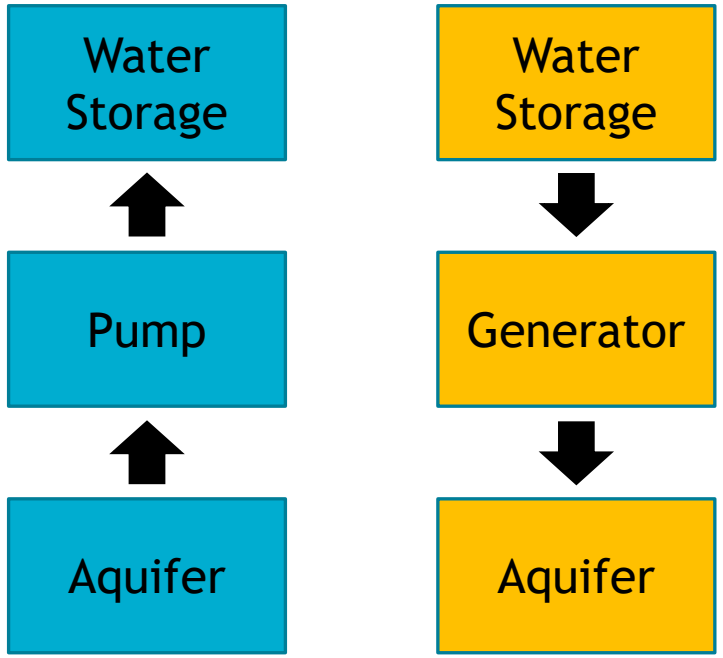

- California Energy Commission (CEC) funded project[1]
- Over 100,000 wells in Central Valley, CA
- Existing wells retrofitted to generate power
- Discharge duration depends on upper reservoir size
- *Goal:* 10 hour discharge at 200 kW
- Backup hospitals, nursing homes, charging centers
- Estimated installed cost: $380/kWh

1. Home (aquiferpumpedhydro.com)

Recent Projects — Non-traditional Configurations

- Ground-Level Integrated Diverse Energy Storage[1] (GLIDES)

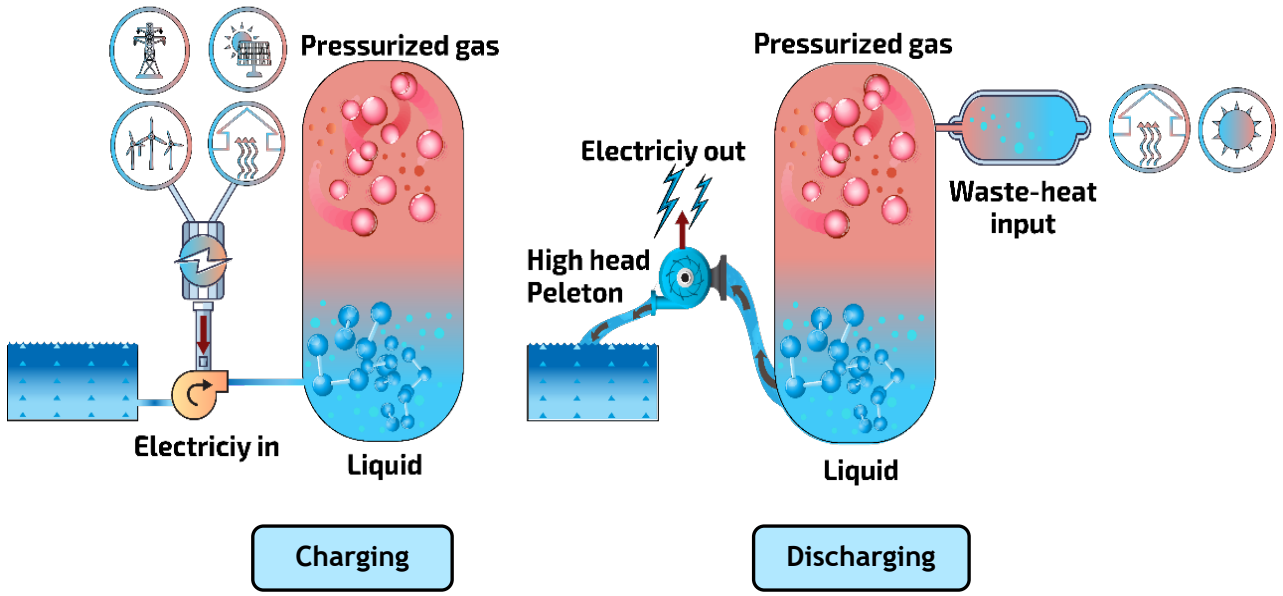

- Modular design
- Combination of PHS and CAES technologies
- Stores energy by compression-expansion of air
- Cost depends on the material used: steel, carbon fiber vessel, pipe segments
- Round-trip efficiency (RTE) of prototypes low[2]
- Potential to reach RTE[3] of 70 – 82%
- Estimated installed cost: $180 – 400/kWh

1. Energy – High-efficiency storage | ORNL
2. Experimental and analytical evaluation of a hydro-pneumatic compressed-air Ground-Level Integrated Diverse Energy Storage (GLIDES) system | Elsevier Enhanced Reader
3. Pub148157.pdf (ornl.gov)

Summary

- Traditional PHS — well-suited to provide long duration energy storage (LDES)
- Challenges: cost, geographic barriers, environmental concerns
- No projects under construction in the U.S.
- Non-traditional configurations: underground reservoir, aquifers, GLIDES
- Alternate configurations — currently in development, potential to serve as LDES

Acknowledgement

Funded by the U.S. Department of Energy, Office of Electricity, Energy Storage program. Dr. Imre Gyuk, Program Director.

Sandia National Laboratories is a multimission laboratory managed and operated by National Technology & Engineering Solutions of Sandia, LLC, a wholly owned subsidiary of Honeywell International Inc., for the U.S. Department of Energy's National Nuclear Security Administration under contract DE-NA0003525.

SANDIA NATIONAL LABORATORIES

- Babu Chalamala
- Andrew Benson

For questions about this presentation: abera@sandia.gov

BACKUP SLIDES

Working Principle

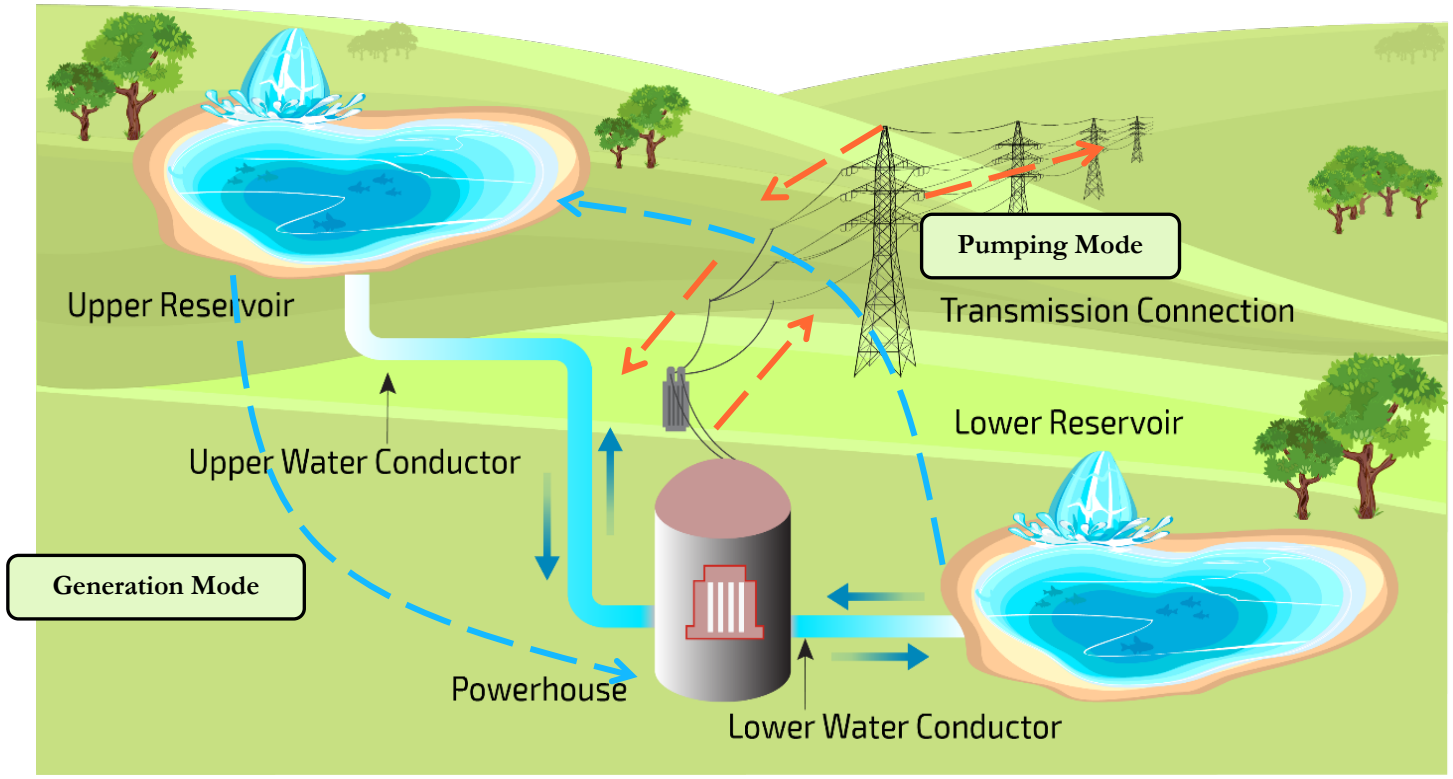

Figure. Working principle of a PHS

- PHS converts electrical energy to potential energy
- Two reservoirs connected with a head difference through a water conductor
- Two modes of operation: **pumping** and **generation**
- **Pumping:** Motor/pump system moves water from lower to the upper reservoir
- **Generation:** Generator/turbine system generates electricity from the stored water