Technical Challenges for Energy Storage in Metro Rail Applications

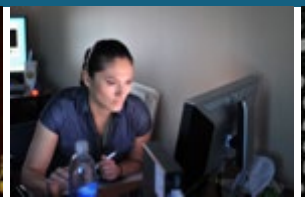

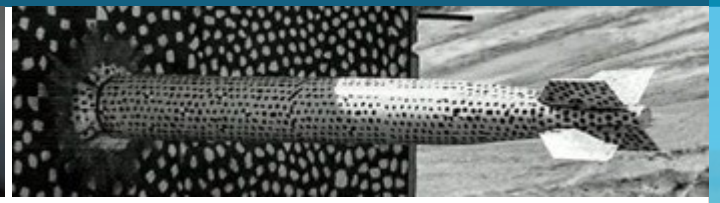

PRESENTED BY

Helix Power

#2069014

Sandia National Laboratories is a multimission laboratory managed and operated by National Technology & Engineering Solutions of Sandia, LLC, a wholly owned subsidiary of Honeywell International Inc., for the U.S. Department of Energy's National Nuclear Security Administration under contract DE-NA0003525.

PROJECT OVERVIEW

Megawatt+ Power Bursts are Common and Waste Energy

Huge Problem: High Power Bursts

Short duration high power (megawatt+) power bursts and fluctuations must be managed

Current "Solutions" are Inefficient

Waste energy, increase emissions, raise costs, and reduce system resiliency

Problem is acute for metro rail systems.

Metro Train Example

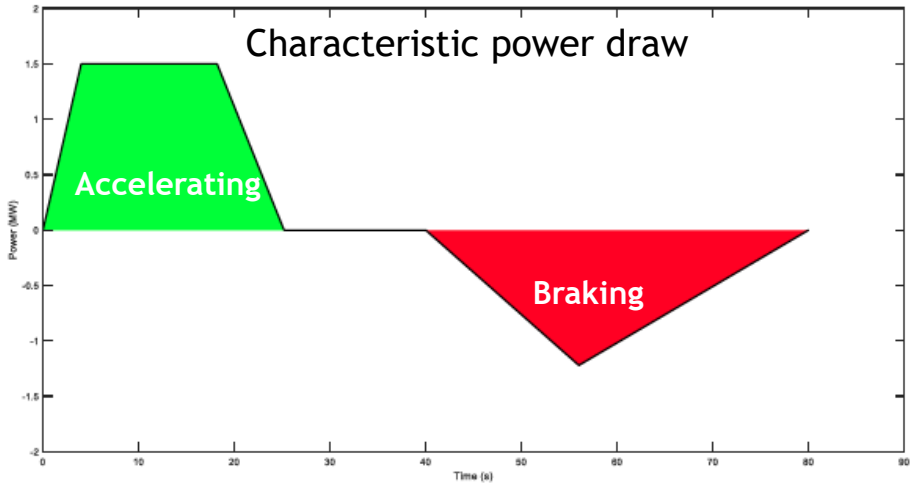

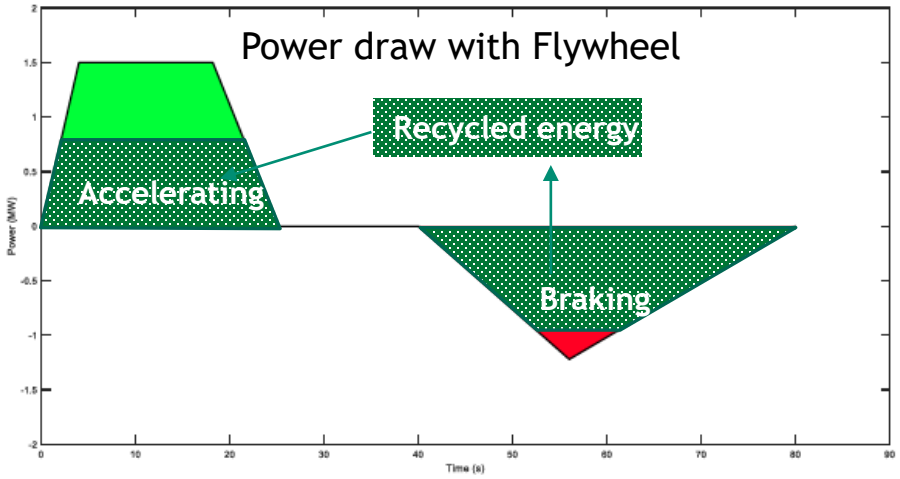

PROJECT TEAM

Helix Power Funders, Contractors, and Supporters.

U.S. DEPARTMENT OF ENERGY

Sandia National Laboratories

nyserda
Energy. Innovation. Solutions.

SourceOne
A Veolia Energy Company

walco
Keeping Industry Productive

MTA New York City Subway

massDOT
Massachusetts Department of Transportation

PROJECT OBJECTIVES

Metro Train Application Has a Rigorous Specification.

Platform Spec	Effect for Metro System
Compact Form Factor	Realistic system-wide deployment Multiple location options per site to suit local conditions
90 Sec Charge - Discharge @ 1MW	Matches train acceleration and braking times
1,000,000+ full charge/discharge cycles	Meets 20-Year High Frequency Train Stop Schedule
Continuous Operation	Operates 3.5 hours non-stop during rush hour

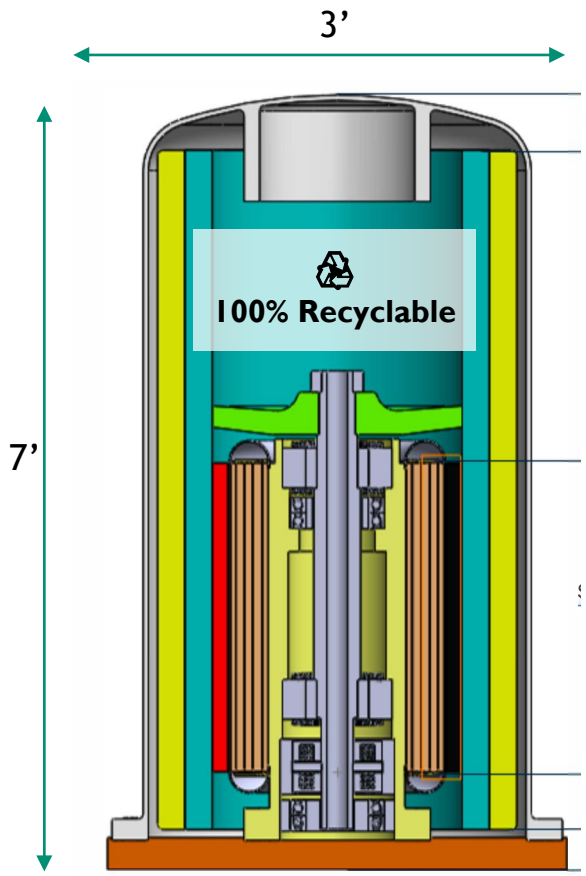

PROJECT METRICS AND MILESTONES

Current Focus Is Advancing to a Pilot Test

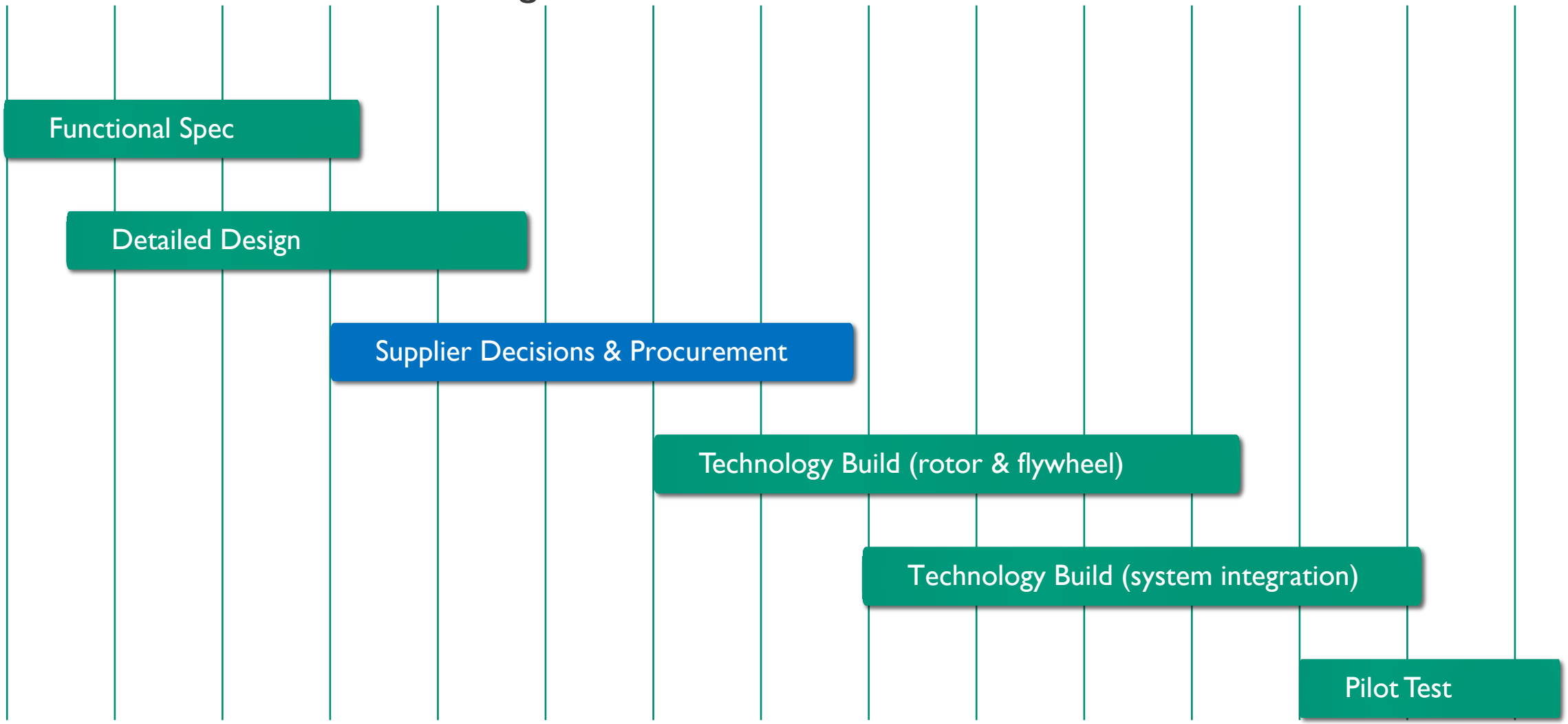

PROJECT CHALLENGES

Metro Rail Application Presents Technical Challenges for Energy Storage Systems

Technology	High Power 1MW+	90 Seconds Duration	Highly Cyclic Duty Cycle	Continuous Operation	Compact Form Factor
Helix	●	●	●	●	●
Batteries	●	●	⊘	⊘	⊘
Capacitors	●	⊘	●	⊘	●
UPS Flywheels	◐	◐	⊘	⊘	⊘
Long Duration Flywheels	⊘	●	◐	◐	⊘

PROJECT RESULTS

Projected Benefits for Metro Rail Systems

Flywheel energy storage has the potential to reduce metro train energy use by 35% (energy captured during braking can support 30-50% of the energy required for acceleration).*

BENEFIT	BENEFIT PER MW
Energy Savings	$200,000/year
Peak Demand Reduction	Up to 500kW
Greenhouse Gas Reductions	800 Tons/Unit/Year
Substation Benefits	$667,000 - $1,000,000
Projected Payback Period	1-5 years**
Projected IRR	18-70%**

*Source: "White Paper on Wayside Energy Storage for Regenerative Braking Energy Recuperation in the Electric Rail System," Ahmed Mohamed (CUNY City College), Andrew Reid (Con Edison) and Thomas Lamb (New York City Transit), 2018.
**Note: Variation in Payback Period and IRR based on varying assumptions of cost and number of units required to achieve projected benefits.

LOOKING FORWARD

(I) Full-scale Prototype	(II) Commercial Unit Testing & Certifications	(III) Commercial Wayside Demonstration
2020	**2021**	**2022**

PROJECT CONTACTS

Helix Power greatly appreciates the support of Dr. Gyuk, SNL and the DOE team.

THANK YOU!

Kevin Blackman

Cofounder, Helix Power

blackman@helixpower.com