Research Spotlight Forum

6.4.19 Quantum Information Sciences

Stephen Carr, PhD

Overview of Research Areas and Opportunities including Quantum Information Science and Engineering

PRESENTED BY:

Research Physicist
Principal Member of Technical Staff
Sandia National Laboratories
Multiscale Fabrication Science and Technology Development Department
Email: scarr@sandia.gov
Phone: (505) 284-5188

Sandia National Laboratories is a multi-mission laboratory managed and operated by National Technology and Engineering Solutions of Sandia LLC, a wholly owned subsidiary of Honeywell International Inc. for the U.S. Department of Energy's National Nuclear Security Administration under contract DE-NA0003525. SAND2019-6216 PE

SAND2018-14303 O

ABOUT YOURSELF

- Current Affiliations:

Sandia National Laboratories	University of New Mexico
Research Physicist	Research Associate Professor
Principal Member of Technical Staff	Center for Quantum Information and Control (CQuIC)
Multiscale Fab Science & Tech Dev Dept	Department of Physics and Astronomy

- Previous Affiliations: National Institute of Standards and Technology (NIST) / Joint Quantum Institute (JQI)
  Dartmouth College (PhD), Los Alamos National Laboratory (Undergraduate Summer Fellowship)

- Current Projects:
  - IARPA SuperCables: Develop efficient data transmission between cryogenic electrical and room-temp optical signals.
  - FAIR DEAL Grand Challenge LDRD: Science and technology of Atomic-Precision Advanced Manufacturing.
  - Building World-First Laser Refrigerated Sensor LDRD: Laser cooling of solids to optically cool a functional payload.
  - Seedling Agile Innovation LDRD: Experimental Demonstration of Electromechanical Conversion on Silicon for Enabling Distributed Quantum Information

- Research Areas and Interests:
  - Quantum Information Science and Engineering
  - Cryogenic Physics/Hardware for Classical and Quantum Sensing/Detection/Readout
  - Beyond Moore Devices Toward the Atomic Limit
  - Physics of Information
  - Heterogeneous Integration
  - Micro/Nano ElectroOptoMechanical Systems (MEOMS/NEOMS)
  - Foundations of Quantum Physics
  - Quantum Thermodynamics

CURRENT WORK IN QUANTUM INFORMATION SCIENCES

Quantum Information Science

Trapped Ions

- Complex optics for state-of-the-art experiments.
- Integration of multiple experimental capabilities/areas including:
  - Optics
  - Lasers
  - Electronics
  - Cryogenics
  - Microfabrication

Solid-State

Self-Assembled Quantum Dots

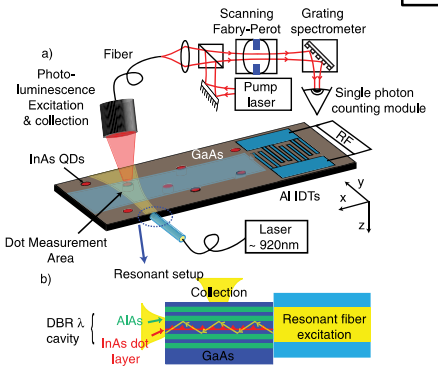

Physical Review Letters 105, 037401 (2010)

Electrostatically-Defined Quantum Dots and Donors

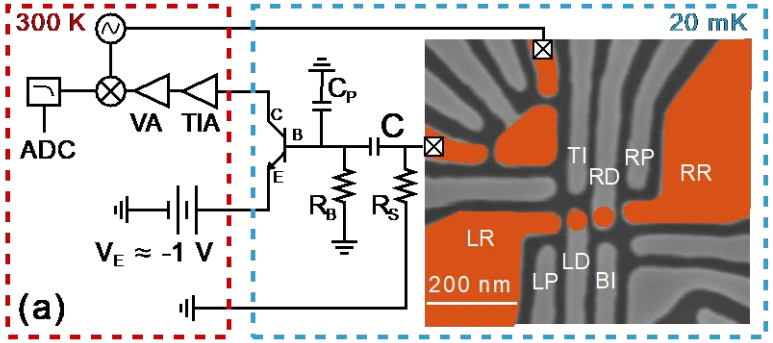

Nature Scientific Reports, submitted (2019)

Cryogenic Amplification and Quantum State Readout

Improving the Readout of Semiconducting Qubits

Matthew Jon Curry

Dissertation

Doctor of Philosophy in Physics (2019)

University of New Mexico

Quantum Transduction

- Quantum Frequency Conversion
- Heterogeneous Integration
- Photonic to/from Phononic

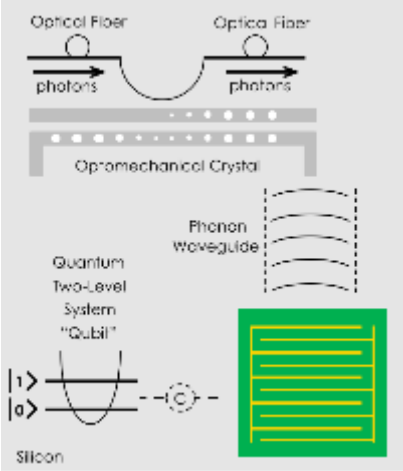

Seedling Agile Innovation LDRD (2019)

Sandia National Laboratories

Hybrid Quantum Systems

- Semiconductor Spin
- Trapped Ion
- Defect/Vacancy
- Topological
- Superconducting
- MEMS/NEMS

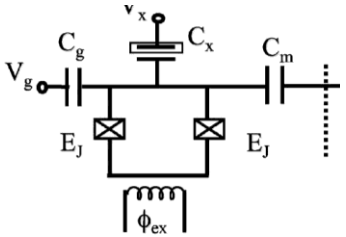

Physical Review B 74, 125314 (2006)

FUNDING SOURCES

List funding sources of current projects, if applicable- especially joint work with Sandia, other NM Universities, or other Sandia Academic Alliance Universities (UT Austin, Georgia Tech, UIUC, or Purdue).

- Funded: Seedling Agile Innovation LDRD: Experimental Demonstration of Electromechanical Conversion on Silicon for Enabling Distributed Quantum Information

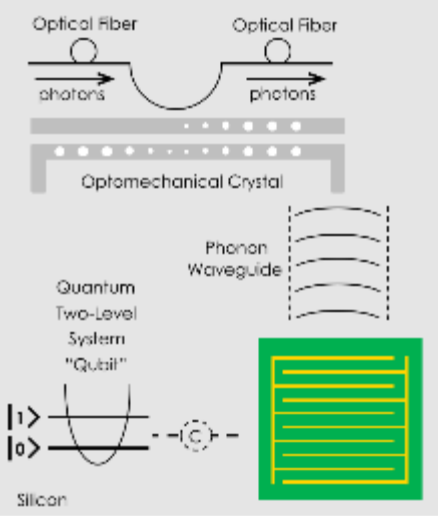

Goal: Experimentally demonstrate electromechanical transduction, from a microwave electrical signal to a microwave acoustic signal, on and into silicon (a standard material for qubits at Sandia).

- Pending:
  - DOE ASCR proposal for *Transparent Optical Quantum Networks for Distributed Science*
  - Sandia National Security Programs LDRD on methods to enable distributed quantum information science
  - Sandia Global Security LDRD on novel methods for the detection of gamma-ray radiation
  - Sandia Global Security LDRD on improving the efficiency and dynamic range of gamma-ray detection

RESEARCH NEEDS

Describe any gaps or new directions that would benefit from collaboration.
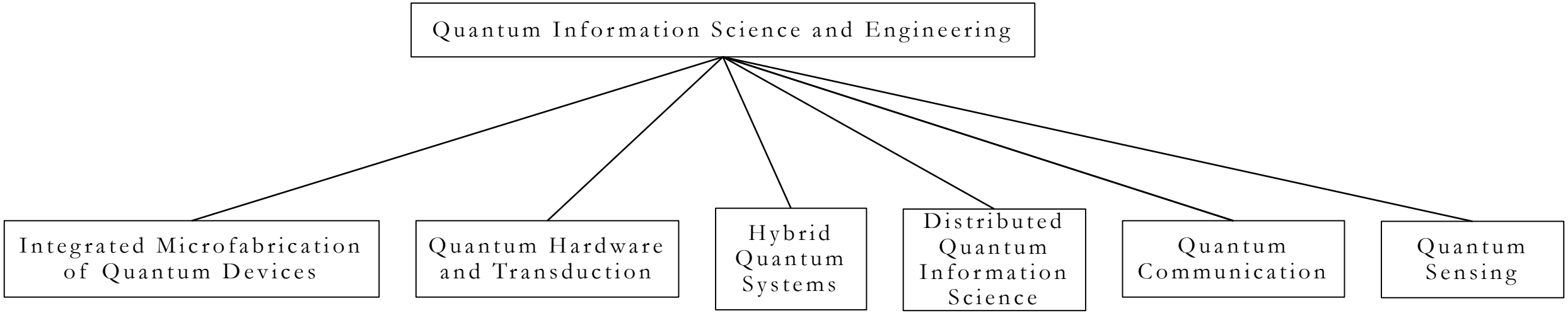
- Summary of Recent Visits to Sandia Academic Alliance Universities:
  - Purdue in December 2018: Ken Patel, Mike Manfra, Zubin Jacob, Yong Chen, Neil Dilley, Tongcang Li, Chen-Lung Hung, Mahdi Hosseini
  - Georgia Tech in January 2019: Rebecca Horton, John Cressler, Colin Parker, Chandra Raman
  - UT-Austin in ? 20??: Contemplated visit in January 2019, may try again in the near future
  - UIUC in ? 20??: Not yet attempted but open to the idea