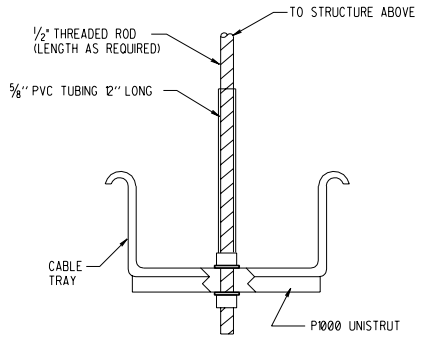

1 DETAIL - CABLE TRAY SUPPORT
SCALE: NTS
TJ5001 TJ5001

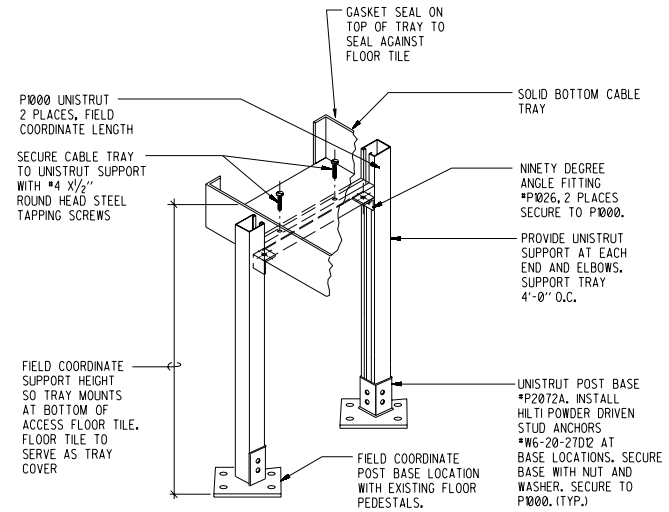

2 DETAIL - UNDERFLOOR DUCT SUPPORT
SCALE: NTS
TJ5001 TJ5001

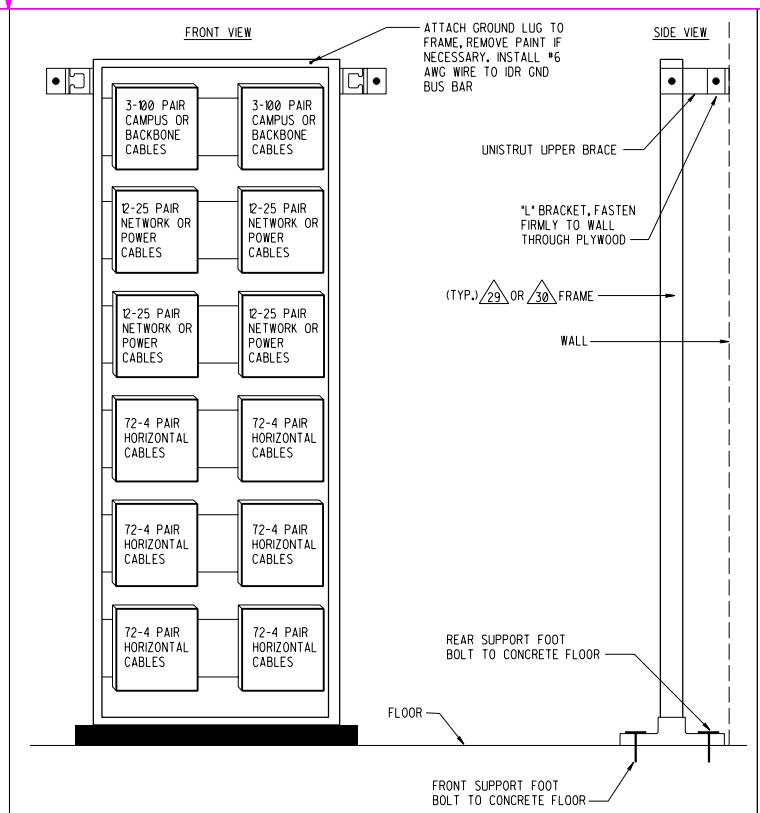

3 DETAIL - FRAME MOUNTING
SCALE: NTS
TJ5001 TJ5001

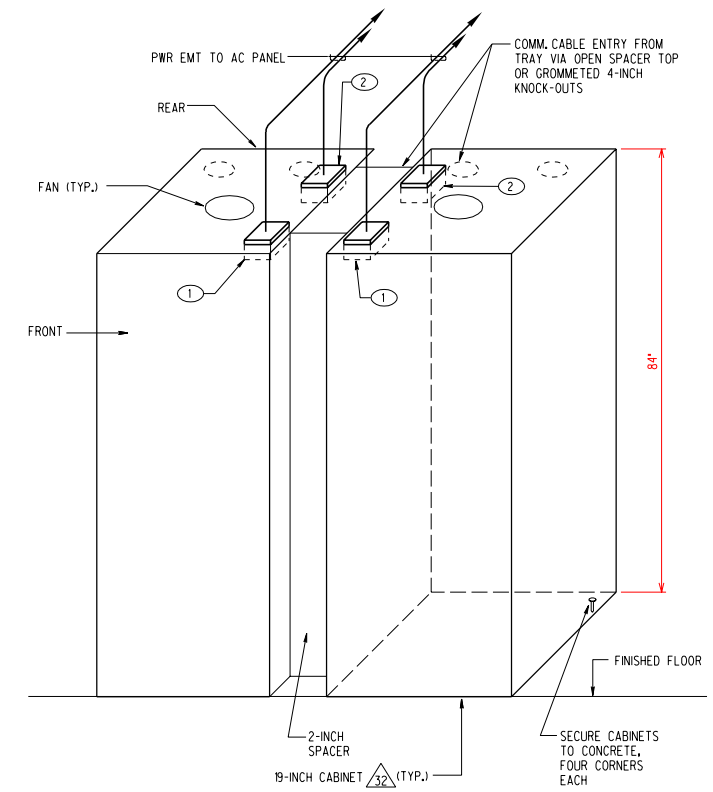

4 DETAIL
SCALE: NTS
TJ5001 TJ5001

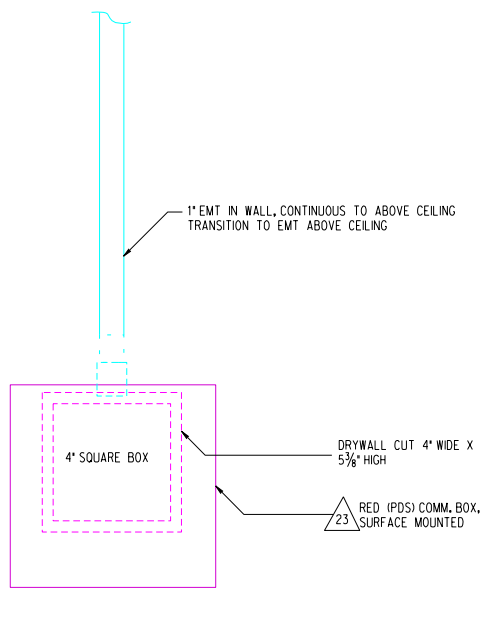

RED OUTLET WITH
NON-INSPECTABLE CONDUIT FITTING
NO SCALE

KEYED NOTES

1. 2-NEMA L5-20R RECEPTACLES EACH ON DEDICATED 20A-1P CIRCUITS FOR EACH EQUIPMENT CABINET.
2. 1- 20A 250 VOLT NEMA L6-20R RECEPTACLE ON DEDICATED 20A 2 POLE BREAKER.

P.O. PROJECT NO.	REV	DATE	DESCRIPTION	DWN	CKD	APP
	C	9/1/01	UPDATES	ELG	JRP	
	B	6/15/01	UDS MODS	EG	FL	
EP-0949	A	11/97	COMMUNICATIONS STD MODS.	YMA	PD	

U.S. DEPARTMENT OF ENERGY
KIRTLAND AREA OFFICE ALBUQUERQUE, NEW MEXICO
SANDIA NATIONAL LABORATORIES

COMMUNICATIONS DETAILS

P.O.	
PROJECT NO.	ES3419
DRAWN BY	KAL/H&N
CHECKED BY	JRM/H&N
SNL ENGR	
DATE	12/1/95

TELECOMMUNICATIONS STANDARD
SIZE D+ DRAWING NO TJ5001STD SEQ.

OLD FILE NAME: 104033/E03
MICROSTATION FILE
FILE NAME: TJ5001STD.dgn
REFERENCE FILES: BORDER3.dgn

Property of Sandia National Laboratories Facilities Management and Operation Center (FMOC). No duplication or alteration allowed without the expressed permission and authorization of FMOC.