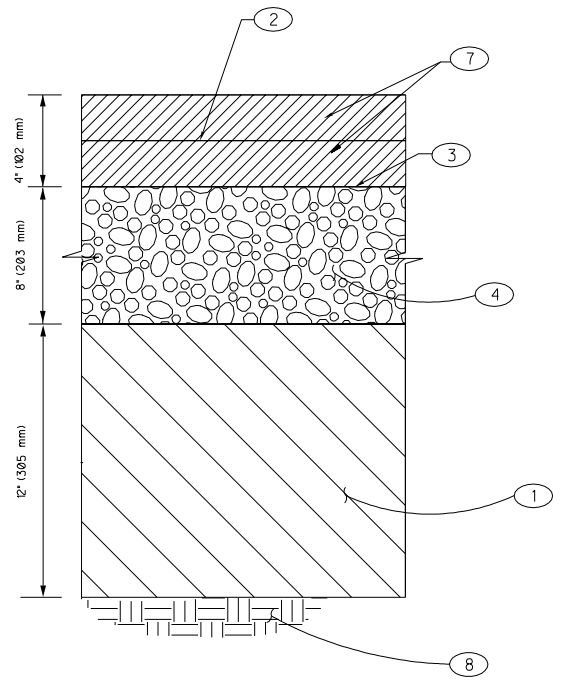

PAVEMENT SECTION - PRIMARY STREET

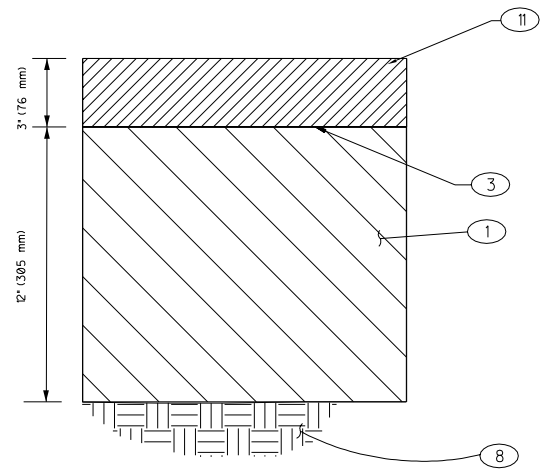

PAVEMENT SECTION - (FLUSH MEDIAN)

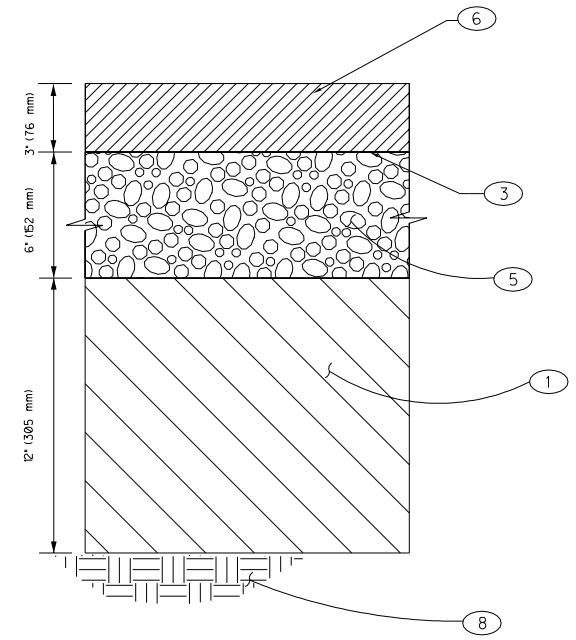

PAVEMENT SECTION - SECONDARY STREETS
PARKING LOT / HEAVY TRUCKS (HS20) LOADING

GENERAL NOTES

1. DEPTHS SHOWN ARE MINIMUMS AND ARE BASED ON A DESIGN R-VALUE OF 23. MATERIAL WITH AN R-VALUE LESS THAN 23 SHALL NOT BE PLACED IN OR ALLOWED TO REMAIN WITHIN THE TOP 2 FEET OF FINISHED SUBGRADE.
2. THE CONTRACTOR SHALL MAINTAIN POSITIVE SURFACE DRAINAGE ON ALL NEW PAVEMENT.
3. FIVE TRUCKS PER DAY ASSUMED FOR "PRIMARY STREET" AND "PARKING LOT SUBJECT TO DAILY TRUCK (HS-20) LOADING". APPROPRIATE ADJUSTMENTS SHOULD BE MADE FOR GREATER LOADINGS.
4. CONTRACTOR SHALL MAINTAIN POSITIVE SURFACE DRAINAGE, WITH MINIMUM ½ PERCENT SLOPE IN THE DIRECTION OF DRAINAGE, AND MINIMUM 2 PERCENT CROSS SLOPE FOR STREET PAVEMENT SECTION.

KEYED NOTES

1. 12" (305 mm) SUBGRADE PREPARATION
2. TACK COAT AS REQUIRED BY SPECIFICATIONS.
3. PRIME COAT AS REQUIRED BY SPECIFICATIONS.
4. 8" (204 mm) AGGREGATE BASE COURSE PLACED IN TWO 4"(102 mm) LIFTS.
5. 6" (152 mm) AGGREGATE BASE COURSE PLACED IN ONE LIFT.
6. 3" (76 mm) ASPHALT SURFACE COURSE, 1500 LB (6670N) STABILITY PLACED IN ONE LIFT. GRADATION TYPE B.
7. 4" (102 mm) ASPHALT SURFACE COURSE, 1800 LB (8000 N) STABILITY PLACED IN TWO - 2" (51mm) LIFTS. BOTTOM LIFT SHALL BE GRADATION TYPE B. TOP LIFT SHALL BE GRADATION TYPE C.
8. COMPACTED FILL OR UNDISTURBED EARTH.
9. 3" (76 mm) ASPHALT SURFACE COURSE, 1500 LB (6670N) STABILITY PLACED IN ONE LIFT GRADATION TYPE C.
10. 6" (152 mm) SUBGRADE PREPARATION

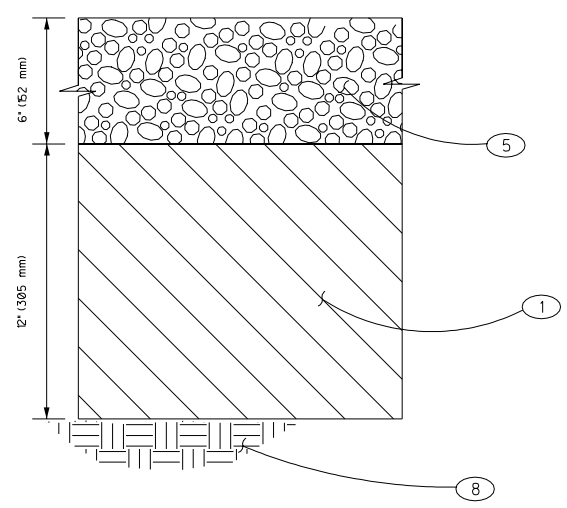

PAVEMENT SECTION - GRAVEL ROADWAY

STA. 11+10.68 TO 16+07.60

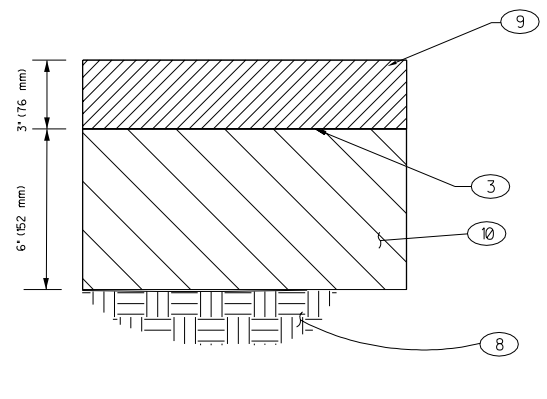

PAVEMENT SECTION - PARKING LOT OR
PEDESTRIAN TRAIL

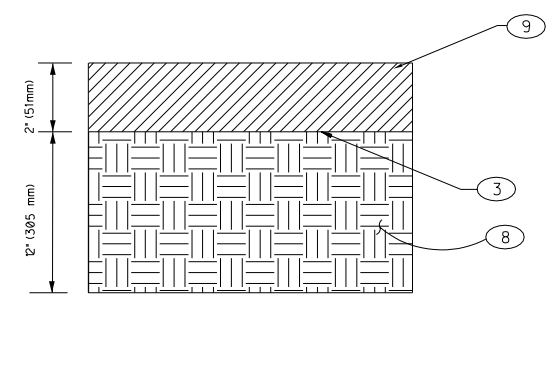

PAVEMENT SECTION - TEMPORARY DETOUR

P.O. PROJECT NO.	REV	DATE	DESCRIPTION	DWN	CKD	APP
		6-15-01	UDS MODS	EG FL		
	A	8/00	REVISED TO ADD SECTIONS	MIP	GA	

U.S. DEPARTMENT OF ENERGY
KIRTLAND AREA OFFICE — ALBUQUERQUE, NEW MEXICO

SANDIA NATIONAL LABORATORIES

STANDARD	P.O.	
	PROJECT NO.	
	DRAWN BY	TDS
	CHECKED BY	PJO/MSH
	SNL ENGR	
CIVIL	DATE	11/13/95
	SIZE D+ / DRAWING NO CP3002STD	SEQ.

OLD FILE NAME: 101754A01

MICROSTATION FILE
FILE NAME: CP3002STD.DGN
REFERENCE FILES:

"Property of Sandia National Laboratories Facilities Management and Operation Center (FMOC). No duplication or alteration allowed without the expressed permission and authorization of FMOC."