PREPARED BY: DLC	SANDIA NATIONAL LABORATORIES FACILITIES ENGINEERING	DETAIL NO.: AE5036
CHECKED BY: HMW		SCALE: NTS
DATE: 01-03-05 / REV:	ROOFTOP SUPPORT BASE	ARCHITECTURAL STDROF.DGN

NOTE:
1.) PLACE ROOFTOP SUPPORTS A MINIMUM 10" O.C.

2.) SNL RECOMMENDED ROOF DETAIL, HOWEVER UTILIZE ROOFING MANUFACTURERS RECOMMENDED DETAILS WHEN POSSIBLE.

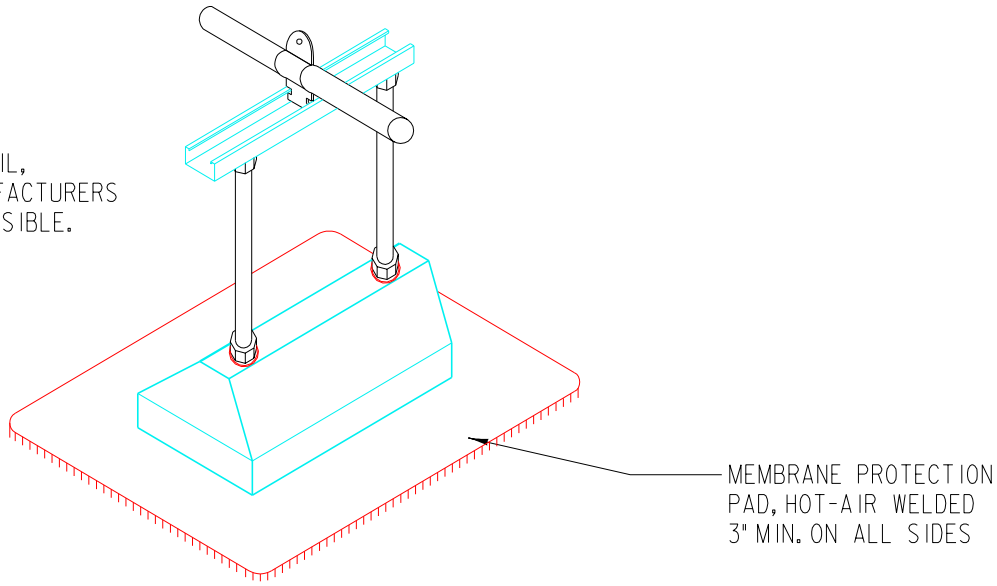

ISOMETRIC

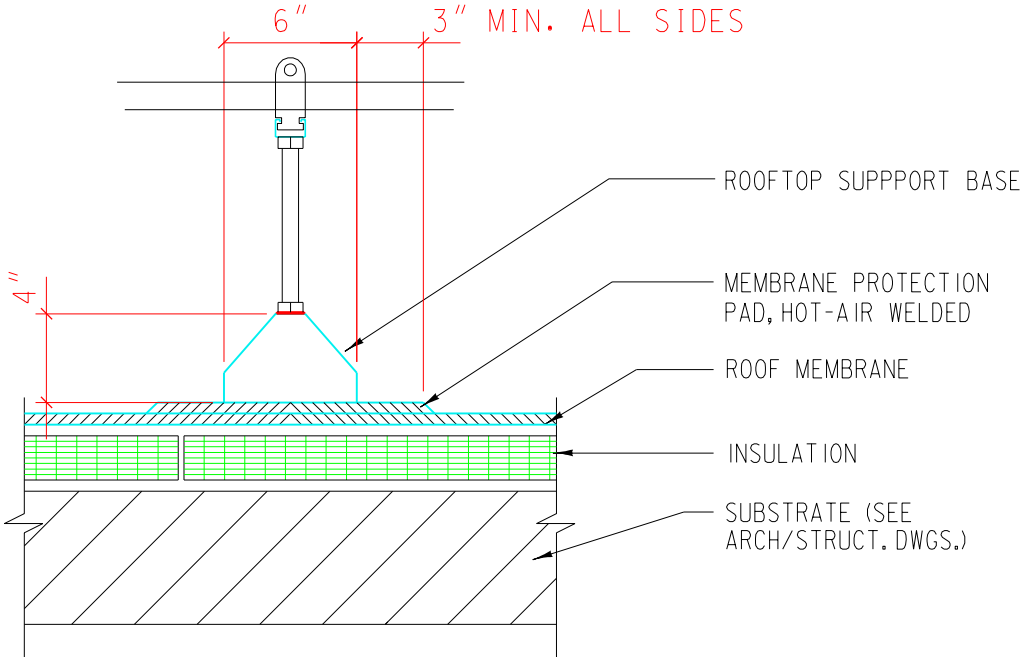

"Property of Sandia National Laboratories Facilities Management and Operation Center (FMOC).
No duplication or alteration allowed without the expressed permission and authorization of FMOC."