| PREPARED BY: DLC | SANDIA NATIONAL LABORATORIES<br>FACILITIES ENGINEERING | DETAIL NO.: AE5035 |
|---|---|---|
| CHECKED BY: HMW | | SCALE: NTS |
| DATE: 01-03-05 / REV: | ROOFTOP SUPPORT BASE | ARCHITECTURAL<br>STDROF.DGN |

NOTE:
1.) PLACE ROOFTOP SUPPORTS A MINIMUM 10" O.C.

2.) SNL RECOMMENDED ROOF DETAIL, HOWEVER UTILIZE ROOFING MANUFACTURERS RECOMMENDED DETAILS WHEN POSSIBLE.

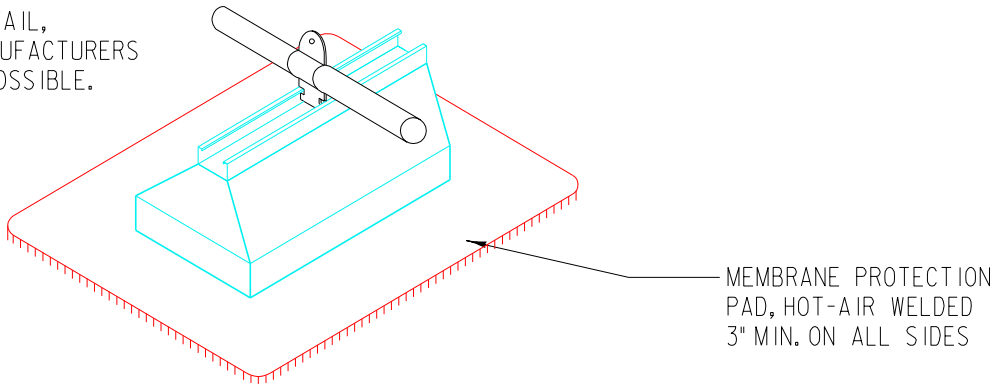


ISOMETRIC

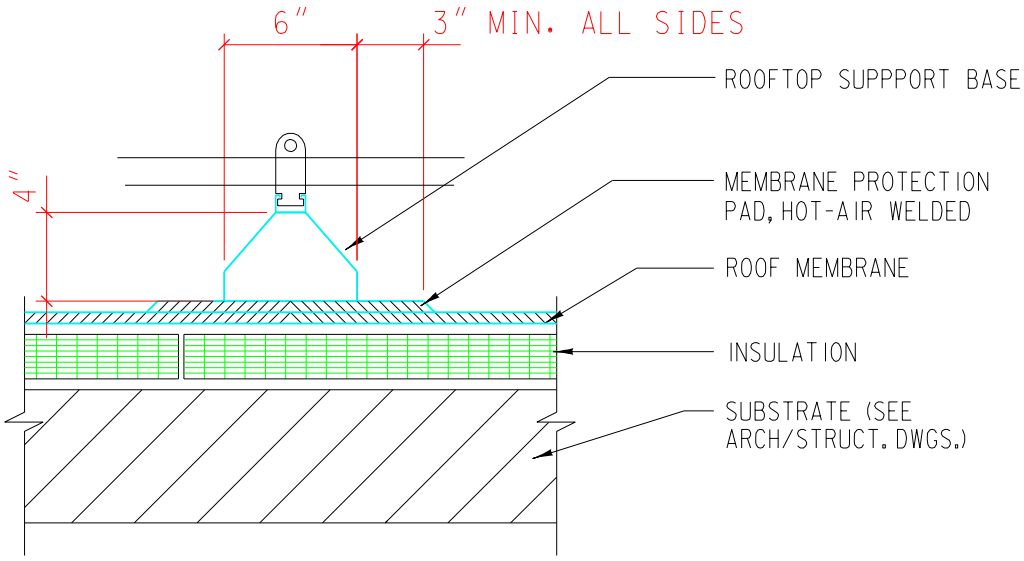


"Property of Sandia National Laboratories Facilities Management and Operation Center (FMOC).
No duplication or alteration allowed without the expressed permission and authorization of FMOC."