OLD FILE NAME: 094176/A1

PREPARED BY: SJREDD	SANDIA NATIONAL LABORATORIES FACILITIES ENGINEERING	DETAIL NO.: AE5026
CHECKED BY: MBRITO		SCALE: NONE
DATE: 4-15-05 / REV: B	DUCT SUPPORT STAND Δ FLAT ROOF	ARCHITECTURAL STANDARD

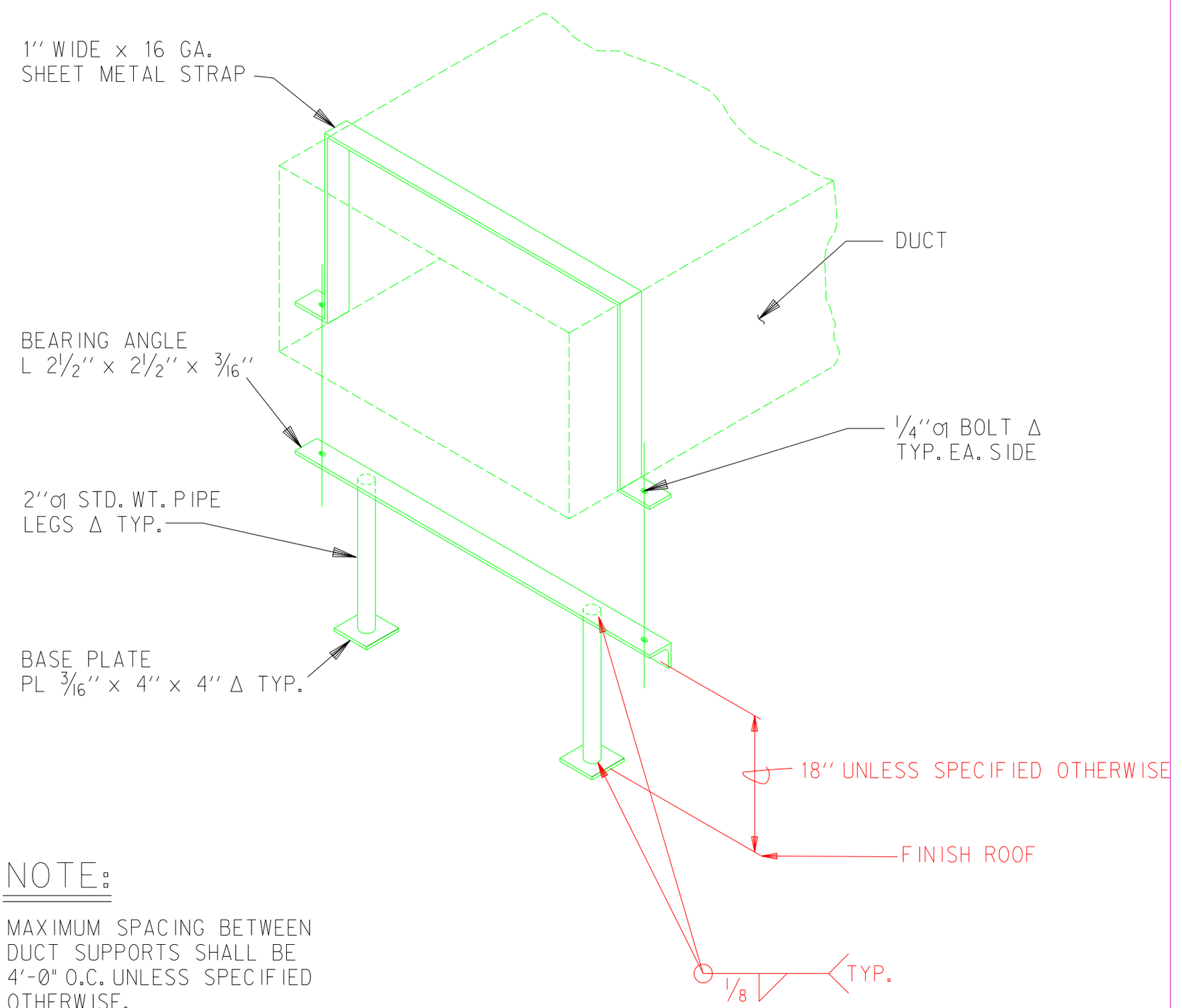

NOTE:

MAXIMUM SPACING BETWEEN DUCT SUPPORTS SHALL BE 4'-0" O.C. UNLESS SPECIFIED OTHERWISE.

"Property of Sandia National Laboratories Facilities Management and Operation Center (FMOC).
No duplication or alteration allowed without the expressed permission and authorization of FMOC."