OLD FILE NAME: 094169/A6

PREPARED BY: DLC	SANDIA NATIONAL LABORATORIES FACILITIES ENGINEERING	DETAIL NO.: AE5014
CHECKED BY: HMW		SCALE: 1 1/2"=1'-0"
DATE: 01-03-05 / REV:	LIGHTNING ROD ROOF MOUNTING	ARCHITECTURAL STDROF.DGN

NOTE: SNL RECOMMENDED ROOF DETAIL, HOWEVER UTILIZE ROOFING MANUFACTURERS RECOMMENDED DETAILS WHEN POSSIBLE.

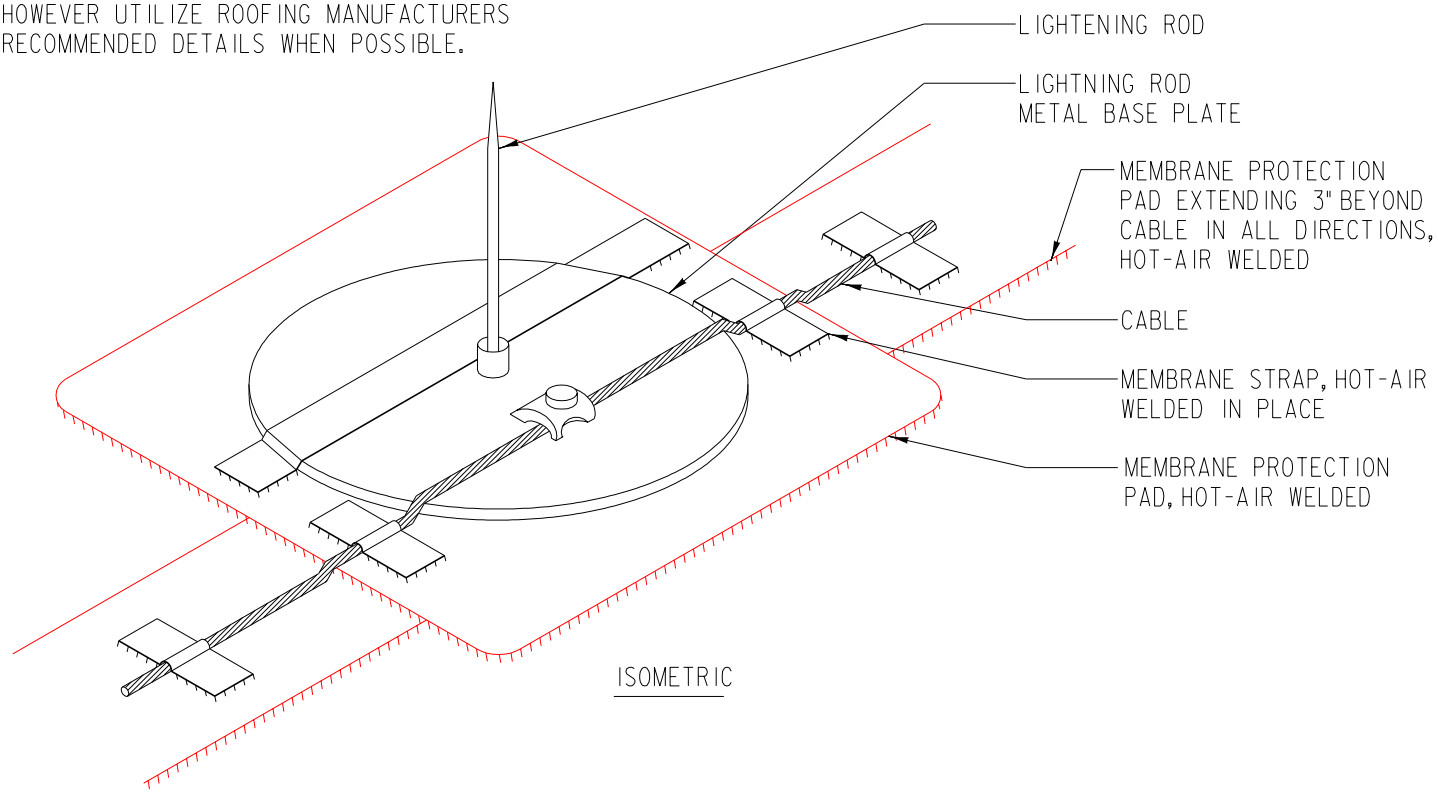

ISOMETRIC

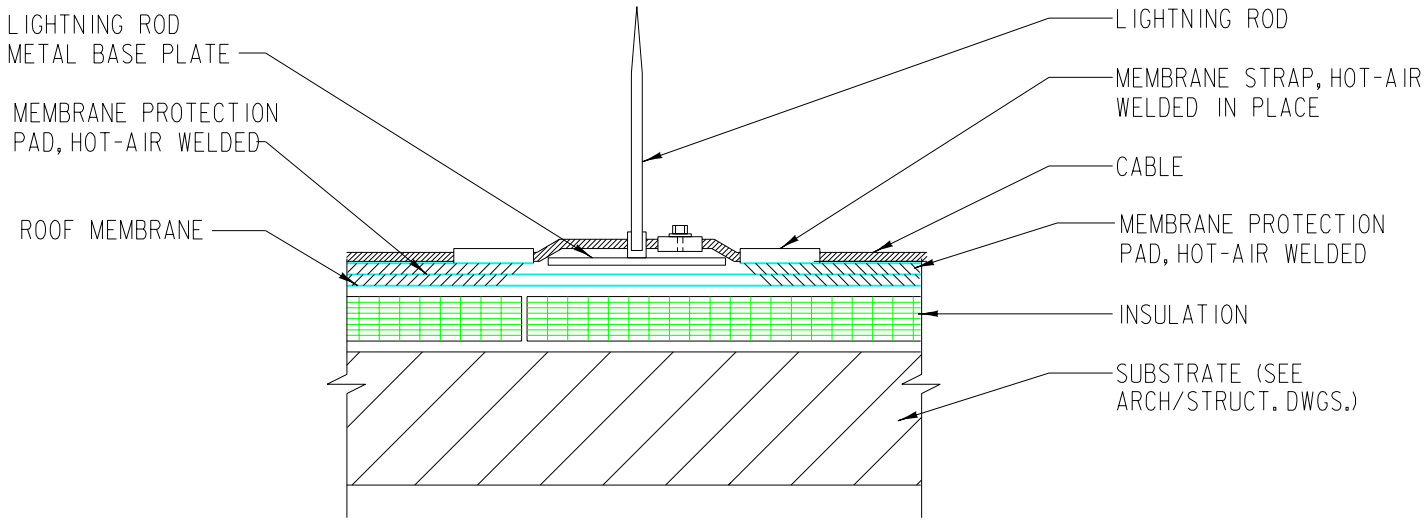

"Property of Sandia National Laboratories Facilities Management and Operation Center (FMOC). No duplication or alteration allowed without the expressed permission and authorization of FMOC."