OLD FILE NAME: 080781/A1

PREPARED BY:	SANDIA NATIONAL LABORATORIES FACILITIES ENGINEERING	DETAIL NO.: AE5004
CHECKED BY:		SCALE: NONE
DATE: 6-15-01 REV:	TEMPORARY SIGNS, TYPE "A"	ARCHITECTURAL STANDARD

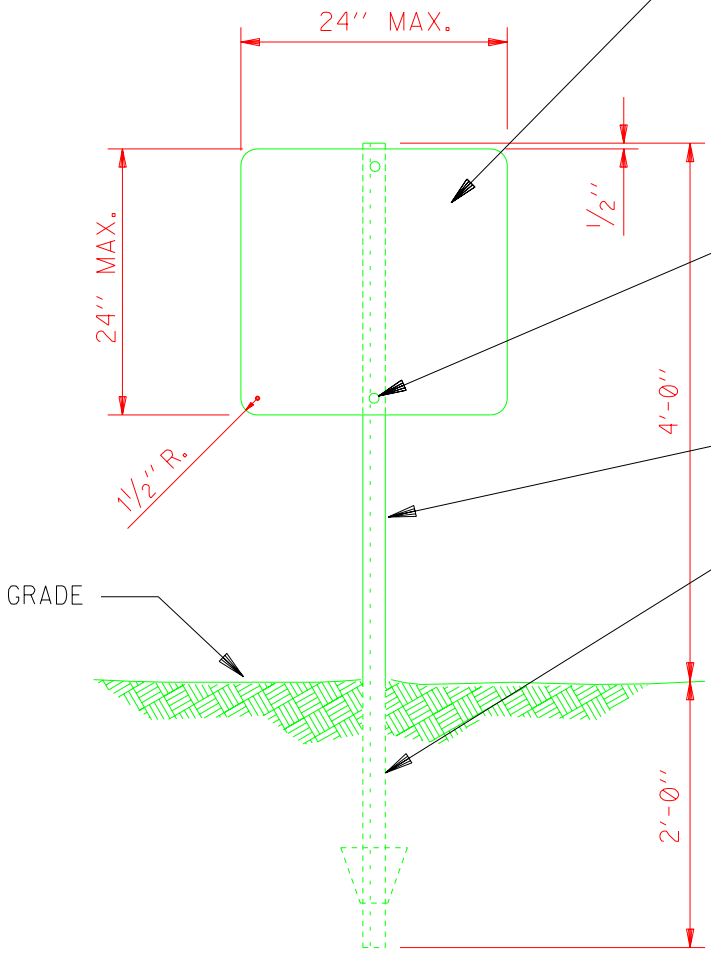

5/8" THICK "HARBORITE" BOARD OR EQUAL (PLASTIC OVERLAY BONDED TO SOLID CORE MARINE PLYWOOD). BOTH SIDES & ALL EDGES TO BE PAINTED WITH ONE COAT "NALTEX" PRIMER AND TWO COATS OF "EPO-LUX NO. 100" OR EQUAL.

ATTACH SIGN TO PIPE WITH TWO GALV. MACH. BOLTS 1/4" x 1 1/4" WITH FLAT WASHER FACE SIDE & LOCK WASHER BACK SIDE.

DRIVE TYPE LINE POST

ALL DRIVE POSTS ARE TO BE SET & PLUMBED IN AUGER DRILLED OR HAND DUG HOLES. SECURE BY COMPACTING SOIL AROUND POST. -(SEE NOTE 1)

NOTES:

1. IF EQUAL RESULTS CAN BE OBTAINED BY DRIVING, THIS WILL BE PERMISSIBLE.
2. THE FACE OF ALL SIGNS SHALL BE PARALLEL TO A CURB OR A REF. LINE & WHEN SEVERAL SIGNS ARE USED IN ONE AREA THEY SHALL FORM A STRAIGHT LINE AS SHOWN ON DRAWINGS.

"Property of Sandia National Laboratories Facilities Management and Operation Center (FMOC). No duplication or alteration allowed without the expressed permission and authorization of FMOC."