Sandia National Laboratories

Standard Specifications for Construction

December 2005

The Drawings, Specifications, and other documents prepared by or on behalf of Sandia National Laboratories are for use solely with respect to specific projects. Sandia shall be deemed the author and owner of these documents. Consultants shall be permitted to retain copies for information and reference in connection with use on specific projects. Drawings, Specifications, and other documents shall not be used by anyone on other projects without advance written approval from Sandia.

SANDIA NATIONAL LABORATORIES
TITLE

BIDDING REQUIREMENTS, CONTRACT FORMS, AND CONDITIONS OF THE CONTRACT

DOCUMENT NUMBER

RFQ	REQUEST FOR QUOTATION (UNDER SEPARATE COVER)
SECTION I	SPECIAL INSTRUCTIONS / INFORMATION (UNDER SEPARATE COVER)
SECTION II	STANDARD TERMS AND CONDITIONS FOR FIXED PRICE CONSTRUCTION CONTRACTS (UNDER SEPARATE COVER)
SECTION III	SUPPLEMENTAL TERMS AND CONDITIONS FOR CONSTRUCTION (UNDER SEPARATE COVER)

SPECIFICATIONS

DIVISION 0 SUPPLEMENTAL INFORMATION

SECTION

00120	SUPPLEMENTARY INSTRUCTIONS TO BIDDERS
00230	EXISTING CONDITIONS
00700	GENERAL CONDITIONS

DIVISION 1 GENERAL REQUIREMENTS

SECTION

01010	SUMMARY OF WORK
01030	ALTERNATES
01060	REGULATORY REQUIREMENTS
01061	METRIC REQUIREMENTS
01090	REFERENCES
01100	SPECIAL PROJECT PROCEDURES
01200	PROJECT MEETINGS
01300	DESCRIPTIVE SUBMITTALS
01310	PROGRESS SCHEDULES (LARGE PROJECTS)
01311	PROGRESS SCHEDULES (SMALL PROJECTS)

01400 QUALITY CONTROL
01505 CONSTRUCTION WASTE MANAGEMENT
01510 TEMPORARY UTILITIES
01525 CONSTRUCTION AIDS
01550 ACCESS ROADS AND PARKING AREAS
01560 TEMPORARY CONTROLS
01570 TRAFFIC REGULATION
01590 FIELD OFFICES AND SHEDS
01610 DELIVERY, STORAGE, AND HANDLING
01720 PROJECT RECORD DOCUMENTS
01860 SAFETY PROVISIONS

DIVISION 2 SITEWORK

SECTION

02051 SITE DEMOLITION
02082 ASBESTOS ABATEMENT
02110 CLEARING AND GRUBBING
02210 SITE GRADING
02220 STRUCTURAL EXCAVATION AND BACKFILL
02221 TRENCH EXCAVATION AND BACKFILL
02244 CHAIN LINK FENCE AND GATES
02250 COMPACTION CONTROL AND TESTING
02261 TOPSOIL
02350 DRILLED PIERS
02430 INLETS AND HEADWALLS
02485 TURF
02490 TREES, SHRUBS, AND GROUNDCOVER
02501 PORTLAND CEMENT CONCRETE SIDEWALK
02513 ASPHALTIC CONCRETE PAVING
02514 PORTLAND CEMENT CONCRETE PAVING
02515 INTERLOCKING CONCRETE PAVERS
02516 PAVEMENT MARKINGS (PAINT)
02532 STABILIZED AGGREGATE BASE COURSE
02601 MANHOLES AND CLEANOUTS
02610 PIPE AND FITTINGS – GENERAL
02630 STORM SEWERAGE
02644 FIRE HYDRANTS
02651 STORM DRAINAGE SYSTEM - ROOF
02653 FUEL STORAGE TANK
02700 SITE IRRIGATION SYSTEM
02701 LEAKAGE TESTS
02711 GAS SYSTEM
02713 SITE DOMESTIC WATER SYSTEM

02717 SITE FIRE WATER SYSTEM
02721 STORM SEWERAGE SYSTEMS
02722 SANITARY SEWERAGE AND ACID WASTE SYSTEMS
02723 FLOW MONITORING STATION
02735 LIQUID EFFLUENT SYSTEM VAULT
02870 CAST ITON TREE GRATES
02875 LITTER RECEPTABLES
02890 PEDESTRIAN BRIDGE

DIVISION 3 CONCRETE

SECTION

03100 CONCRETE FORMWORK
03200 CONCRETE REINFORCEMENT
03300 CAST-IN-PLACE CONCRETE
03353 ARCHITECTURAL CONCRETE
03450 ARCHITECTURAL PRECAST-PRESTRESSED CONCRETE

DIVISION 4 MASONRY

SECTION

DIVISION 5 METALS

SECTION

05100 STRUCTURAL METAL FRAMING
05200 STEEL JOISTS
05300 METAL DECKING
05400 COLD-FORMED METAL FRAMING
05500 METAL FABRICATIONS
05510 METAL STAIRS
05520 HANDRAILS AND RAILINGS
05530 FLOOR PLATE AND GRATING
05801 INTERIOR EXPANSION JOINTS
05802 EXTERIOR EXPANSION JOINTS

DIVISION 6 WOOD AND PLASTIC

SECTION

DIVISION 7 THERMAL AND MOISTURE PROTECTION

07160 BITUMINOUS DAMPROOFING
07210 BUILDING INSULATION
07220 ROOF AND DECK INSULATION
07241 EXTERIOR INSULATION AND FINISH SYSTEM
07270 FIRESTOPPING
07410 PREFORMED WALL AND ROOF PANELS
07530 FLEXIBLE SHEET ROOFING SYSTEM
07600 FLASHING AND SHEET METAL
07610 METAL ROOFING
07631 GUTTERS
07830 ROOF HATCHES
07850 PREFABRICATED CURBS
07900 SEALANTS
07910 JOINT FILLERS AND GASKETS

DIVISION 8 DOORS AND WINDOWS

SECTION

08100 METAL DOORS AND FRAMES
08210 WOOD DOORS
08305 ACCESS DOORS
08331 OVERHEAD COILING DOORS
08365 VERTICAL LIFT DOORS
08366 BI-SWING STEEL DOORS
08395 REVOLVING DARKROOM DOORS
08410 ALUMINUM ENTRANCES AND STOREFRONT
08710 FINISH HARDWARE
08800 GLAZING
08811 PLATE AND FLOAT GLASS
08813 TEMPERED GLASS
08822 LAMINATED GLASS
08823 INSULATING GLASS
08824 LAMINATED LIQUID-CRYSTAL GLASS
08920 TRANSLUCENT WALL AND SKYLIGHT SYSTEMS

DIVISION 9 FINISHES

SECTION

09260 GYPSUM WALLBOARD SYSTEMS
09310 CERAMIC TILE

09510 ACOUSTICAL CEILINGS
09650 RESILIENT FLOORING
09680 CARPETING
09702 RESINOUS FLOORING (EPOXY)
09900 PAINTING
09952 VINYL WALL COVERING
09986 FIBERGLASS WALL PANELS

DIVISION 10 SPECIALTIES

SECTION

10270 ACCESS FLOORING

DIVISION 11 EQUIPMENT

SECTION

11610 FUME HOODS

DIVISION 12 FURNISHINGS

SECTION

12610 MODULAR FURNITURE SYSTEMS

DIVISION 13 SPECIAL CONSTRUCTION

SECTION

13122 CHEMICAL STORAGE SHEDS

DIVISION 14 CONVEYING SYSTEMS

SECTION

DIVISION 15 MECHANICAL

SECTION

15010	BASIC MECHANICAL REQUIREMENTS
15030	ELECTRICAL REQUIREMENTS FOR MECHANICAL EQUIPMENT
15050	BASIC MECHANICAL MATERIALS AND METHODS
15100	VALVES
15130	METERS AND GAUGES
15140	SUPPORTS AND ANCHORS
15175	VARIABLE FREQUENCY DRIVES
15190	MECHANICAL IDENTIFICATION
15195	LABORATORY AND SPECIAL EQUIPMENT (ROUGH-IN AND CONNECT)
15200	SEISMIC PROTECTION FOR MECHANICAL SYSTEMS
15240	MECHANICAL SOUND AND VIBRATION CONTROL
15250	MECHANICAL INSULATION
15330	AUTOMATIC FIRE SPRINKLER SYSTEM(DESIGN AND INSTALL)
15331	AUTOMATIC FIRE SPRINKLER SYSTEM(NO DESIGN/INSTALL ONLY)
15400	PLUMBING-GENERAL
15405	SOIL, WASTE, AND VENT PIPING SYSTEMS
15406	STORM DRAINAGE SYSTEMS
15411	WATER DISTRIBUTION PIPING
15430	PLUMBING SPECIALTIES
15440	PLUMBING FIXTURES
15445	ELECTRIC WATER COOLERS
15453	PLUMBING PUMPS
15458	DOMESTIC WATER HEATER
15459	ELECTRIC WATER HEATERS (LESS THAN 85 GALLONS)
15460	ELECTRIC BOOSTER WATER HEATERS
15481	COMPRESSED AIR PIPING AND EQUIPMENT
15483	FUEL OIL SYSTEMS
15488	NATURAL GAS PIPING SYSTEM
15492	LIQUID EFFLUENT SYSTEM
15493	LABORATORY DRAINAGE SYSTEMS
15494	LABORATORY SUPPLY SYSTEMS
15498	LABORATORY SUPPLY SYSTEMS (LIQUID NITROGEN)
15510	HYDRONIC PIPING
15512	UNDERGROUND PIPING SYSTEMS (PRE-INSULATED)
15515	HYDRONIC SPECIALTIES
15516	COOLING TOWER SEPARATOR
15534	TOTAL FLOOD CLEAN AGENT FIRE SUPRESSION SYSTEM
15540	HVAC PUMPS
15545	DEIONIZED COOLING WATER SYSTEM
15555	HOT WATER BOILER (FIRETUBE)
15559	STEEL WATER TUBE BOILERS
15573	FIRETUBE BOILER ANNUNCIATOR PANELS

15576 CHIMNEY FLUE AND VENTS
15680 CENTRIFUGAL COMPRESSOR WATER CHILLERS
15681 WATER COOLED CHILLERS (RECIPROCATING OR SCROLL)
15684 ROTARY SCREW CHILLERS
15685 CENTRIFUGAL AND ROTARY FLUID CHILLERS
15686 ABSORPTION WATER CHILLERS
15715 PACKAGED COOLING TOWERS-STEEL
15716 PACKAGED COOLING TOWERS-STEEL (DEIONIZED COOLING WATER)
15717 COOLING TOWER FIELD ASSEMBLED
15747 CONDENSER WATER TREATMENT SYSTEM
15755 HEAT EXCHANGERS
15777 COMPUTER ROOM AIR CONDITIONING SYSTEMS
15788 PACKAGED AIR CONDITIONERS (THRU THE WALL HEAT PUMP)
15790 COILS
15812 AIR WASHERS
15855 AIR HANDLING UNITS
15856 DRY AIR HANDLING UNITS
15860 CENTRIFUGAL FANS
15865 AXIAL FANS
15870 POWER AND GRAVITY VENTILATORS
15884 AUTOMATIC ROLL FILTERS
15885 AIR CLEANING
15891 METAL DUCTWORK
15895 SPECIAL DUCTWORK SYSTEMS
15896 HVAC CASINGS
15910 DUCTWORK ACCESSORIES
15920 SOUND ATTENUATORS
15932 AIR OUTLETS, INLETS, VAV TERMINALS
15940 LABORATORY AIR CONTROL SYSTEMS
15970 CONTROLS
15980 EFFLUENT MONITORING AND CONTROL STATION
15990 TESTING, ADJUSTING, AND BALANCING

DIVISION 16 ELECTRICAL

SECTION

16050 GENERAL ELECTRICAL REQUIREMENTS
16120 WIRE, 600 VOLTS AND BELOW
16130 RACEWAYS, BOXES, AND FITTINGS
16140 WIRING DEVICES
16150 MOTORS AND MOTOR CONTROLLERS
16151 ELECTRICALLY OPERATED STEEL DOORS

16160 CIRCUIT BREAKERS AND PANELBOARDS
16460 GENERAL PURPOSE TRANSFORMERS
16461 SPECIAL PURPOSE TRANSFORMERS
16490 AUTOMATIC TRANSFER SWITCH
16500 GENERAL PURPOSE LIGHTING
16710 FIRE ALARM AND DETECTION SYSTEM (MXL SYSTEM)
16715 FIRE CONTROL PANEL
16720 INTRUSION ALARM SYSTEM
16740 SECURE COMMUNICATION SYSTEM
16741 UNSECURE COMMUNICATION SYSTEM
16742 FIBER OPTIC COMMUNICATION SYSTEM
16770 PUBLIC ADDRESS SYSTEM
16780 CLOSED CIRCUIT TELEVISION

DRAWINGS

SEE INDEX DRAWING FOR A COMPLETE LIST OF ALL DRAWINGS

END OF DOCUMENT

DOCUMENT 00120

SUPPLEMENTARY INSTRUCTIONS TO BIDDERS

PART 1 GENERAL

1.01 DRAWING PACKAGES

A. Sandia will make available one (1) full size reproducible drawing set, one (1) half-scale reproducible drawing set, and one (1) reproducible copy of the specifications at the time of Request for Quotation. These documents will be made available from BPS Reprographic Services 2182 Rheem Dr. Pleasanton, CA 94566 (510) 846-8111. All costs associated with the reproduction and duplication of these documents for use during the bid process shall be borne by the bidders. Sandia will keep all documents current and alert all bidders should revisions occur during the bid process.

B. Successful bidder shall furnish all bid documents (drawings and specifications) required for the duration of the project from the source described above.

1.02 CONTRACTOR EVALUATION

A. At contract completion the Contractor will be evaluated by the SDR regarding performance under this contract on the following attributes:

1. Timely delivery / performance / reports

2. Reasonableness of pricing / cost estimating

3. Timely responses / actions / corrections per Sandia request

4. Facilities / equipment furnished by the Contractor

5. Adherence to Sandia Contract Documents

6. Compliance with Safety Provisions

B. The results of these evaluations will identify the level of quality that Sandia perceives it is receiving from its construction contractors in the performance and completion of construction projects. If the evaluation merits an unsatisfactory rating in one or more areas, the Contractor will be advised accordingly.

1.03 PRINCIPLES FOR THE PREVENTION AND RESOLUTION OF DISPUTES

A. Sandia supports the Dispute Avoidance and Resolution Task (DART) Force Declaration of Principles and plans on acknowledging these principles with the Contractor. These principles address the following:

1. Establishing relationships through partnering and team building.

2. Resolving disputes during performance of the contract using negotiation between lines of authority within respective organizations.

3. Using mediation for post performance dispute resolution.

4. Acknowledging these principles without entering into a binding agreement.

PART 2 PRODUCTS - Not Used

PART 3 EXECUTION - Not Used

END OF DOCUMENT

DOCUMENT 00230

EXISTING CONDITIONS

PART 1 GENERAL

1.01 DESCRIPTION OF EXISTING SITE

A. *Describe Existing Site*

1.02 DESCRIPTION OF EXISTING BUILDINGS

A. *Describe Existing Buildings*

B. The following hazards are known to exist in or around the designated work area:

1. *List Hazards*

1.03 PROPERTY SURVEY

A. Prior to commencement of work, Contractor, and Sandia Delegated Representative (SDR) shall jointly survey the existing building areas, making permanent note and record of existing damage. This record shall serve as a basis for determination of subsequent damage to structures.

B. The Contractor shall report in writing to the SDR conditions detrimental to work. Failure to examine and report makes the Contractor responsible for all corrections the SDR may require. Commencement of work constitutes acceptance.

PART 2 PRODUCTS - Not Used

PART 3 EXECUTION - Not Used

END OF DOCUMENT

DOCUMENT 00700

GENERAL CONDITIONS

PART I GENERAL

1.01 GENERAL PROVISIONS

A. Intent of the Contract Documents:

1. To describe a functionally complete project (or part thereof) to be constructed in accordance with the Contract Documents.
2. Any Work, materials or equipment that may reasonably be inferred from the Contract Documents as being required to produce the intended result shall be supplied whether or not specifically called for.
3. When words which have a well-known technical or trade meaning are used to describe Work, materials, or equipment such words shall be interpreted in accordance with that meaning.
4. Reference to standard specifications, manuals or codes of any technical society, organization or association, or to the laws or regulations of any governmental authority, whether such reference be specific or by implication, shall mean the latest standard specification, manual, code or laws or regulations in effect at the time of opening of quotations, except as may be otherwise specifically stated.
5. No provision of any referenced standard specification, manual or code (whether or not specifically incorporated by reference in the Contract Documents) shall be effective to change the duties and responsibilities of Sandia, Contractor, or any of their consultants, agents or employees from those set forth in the Contract Documents nor shall it be effective to assign to SDR, or any of SDR's consultants, agents or employees, any duty or authority to supervise or direct the furnishing or performance of the Work.
6. To construct a fully waterproof and finished building. All exposed interior and exterior finishes are to be painted, stained, etc. except where otherwise noted.

B. The organization of the Specifications into division, sections and articles, and the arrangement of drawings shall not control the Contractor in dividing the Work among subcontractors or in establishing the extent of Work to be performed by any trade.

C. Sections of Division 1 - General Requirements govern the execution of all sections of these specifications.

D. The drawings and specifications are complimentary; what is shown or called for by one shall be constructed as if shown and called for by all.

E. The drawings and specifications cover the extent and general arrangement of the various civil, structural, architectural, mechanical, or electrical systems subject to the individual characteristics with regard to size, placement and arrangement.

F. The drawings are diagrammatic and are not intended to include all of the details, arrangement of material, systems or dimensions. The exact locations of items are not indicated unless specifically dimensioned.

G. Do not scale the drawings. If required dimensions are not supplied or are in conflict with actual built or found conditions, the contractor shall notify the SDR for resolution.

H. Where dimensions are noted, the drawings shall be accurately followed. Dimensions, locations of doors, partitions, and similar physical features shall be taken from the architectural documents.

I. Exceptions to, errors, omissions, and conflicts within the Contract Documents shall be brought to the attention of the SDR for resolution.

J. Large scaled details have precedence over drawings of smaller scale.

K. Work not detailed, marked or specified will be similar to other work of a like nature.

1.02 REUSE OF DOCUMENTS

A. Neither Contractor nor any subcontractor or supplier or other person or organization performing or furnishing any of the Work under a direct or indirect contract with Sandia shall have or acquire any title to or ownership rights in any of the drawings, specifications or other documents (or copies of any thereof) prepared for the project; and they shall not reuse any of them on extensions of the project or any other project without written consent of Sandia.

1.03 ADMINISTRATION OF THE CONTRACT

A. The Contract Documents shall not be construed to create any contractual relationship of any kind between Architect/Engineer and the Contractor. Nothing contained in the Contract Documents shall create any contractual relationship between Sandia or Architect/Engineer and any subcontractor or sub-subcontractor. No decision made by Architect/Engineer in good faith shall give rise to any duty or responsibility of Architect/Engineer to Contractor, any subcontractor, any supplier, or any other person or organization performing any of the Work, or to any surety for any of them.

B. The SDR will provide administration of the Contract as hereinafter described.

C. The SDR will be Sandia's representative during construction and until final payment is due. Sandia instruction to the Contractor shall be forwarded through the SDR. The SDR will have authority to act on behalf of Sandia only to the extent provided in the Contract Documents, unless otherwise modified by written instrument.

D. The SDR will visit the site at intervals appropriate to the stage of construction to become generally familiar with the progress and quality of the Work and to determine in general if the Work is proceeding in accordance with the Contract Documents. However, the SDR will not be required to make exhaustive or continuous on-site inspections to check the quality or quantity of the Work.

E. The SDR will not be responsible for and will not have control or charge of construction means, methods, techniques, sequences or procedures, or for safety precautions and programs in connection with the Work, since these are solely the Contractor's responsibility. The SDR will not be responsible for the Contractor's failure to carry out the Work in accordance with the Contract Documents. The SDR will not have control or charge over the acts or omissions of the Contractor, subcontractors, or any of their agents or employees, or any other persons performing any of the Work.

F. Based on the SDR's observations and an evaluation of the Contractor's applications for payment, the SDR will assist the SCR in determining the amounts owing to the Contractor.

G. The SDR will be the interpreter of the requirements of the Contract Documents and the judge of the performance there under by the Contractor.

H. The SDR will render interpretations necessary for the proper execution or progress of the Work, with reasonable promptness and in accordance with any time limit agreed upon. Any such interpretation requested by the Contractor shall be submitted to the SDR in writing.

I. If a question of intent concerning the specifications or drawings develops relating to the execution or progress of the Work or the interpretation of the Contract Documents the SDR will render an interpretation of the intent in writing, within a reasonable time after such interpretation is requested in writing.

J. All interpretations and decisions of the SDR shall be consistent with the intent of and reasonably inferable from the Contract Documents and will be in writing or in the form of drawings.

K. The SDR's decision in matters relating to artistic effect will be final, if consistent with the intent of the Contract Documents, and may not be appealed by the Contractor.

L. The SDR has authority to reject Work which does not conform to the Contract Documents. Whenever the SDR considers it necessary or advisable for the implementation of the intent of the Contract Documents, the SDR has authority to require special inspection or testing of the Work whether or not such Work is fabricated, installed or completed. However, neither this authority of the SDR nor any decision made in good faith either to exercise or not to exercise such authority, shall give rise to any duty or responsibility of the SDR to the

Contractor, subcontractor, material and equipment suppliers, their agents or employees, or other persons performing any of the Work.

M The SDR may conduct inspections to determine the dates of substantial completion and final completion, and will receive and review written warranties and related documents required by the Contract and assembled by the Contractor.

N. Sandia will provide on-site project representatives to assist the SDR in carrying out his responsibilities at the construction site.

1.04 CONTRACTOR

A. The Contractor shall supervise and direct the Work, using the Contractor's best skill and attention. The Contractor shall be solely responsible for and have control over construction means, methods, techniques, sequences and procedures for coordinating all portions of the Work under the Contract.

B. The Contractor shall be responsible to Sandia for the acts and omissions of the Contractor's employees, subcontractors, sub-subcontractors, suppliers and their agents and employees, and other parties performing portions of the Work under a Contract with the Contractor, a subcontractor, sub-subcontractor or supplier.

C. The Contractor shall not be relieved of obligations to perform the Work in accordance with the Contract Documents either by the activities or duties of the SDR in administration of the Contract, or by inspections, tests or approvals required or performed by persons other than the Contractor.

D. The Contractor shall be responsible for inspection of portions of Work already performed under this Contract to determine that such portions are in proper condition to receive subsequent Work.

E. The Contractor shall be responsible for laying out the Work and shall employ professionally qualified personnel to perform such tasks. Contractor shall protect and preserve established reference points provided by Sandia and shall make no changes or relocation without the prior written approval of Sandia. Contractor shall report to SDR whenever a reference point is lost or destroyed or requires relocation because of necessary changes in grades or locations, and shall be responsible for the accurate replacement or relocation of such reference points by professionally qualified personnel.

F. Unless otherwise provided in the Contract Documents, the Contractor shall provide and pay for all labor, materials, equipment, tools, construction equipment and machinery, water, fuel, heat, utilities, transportation, and other facilities and services necessary for the proper execution and completion of the Work, whether temporary or permanent and whether or not incorporated or to be incorporated in the Work.

G. The Contractor shall at all times enforce strict discipline and good order among his employees and other persons carrying out the Contract. The Contractor shall

not permit employment of unfit persons or anyone not skilled in the task assigned to him.

H. As required by the Standard Terms and Conditions for Fixed Price Construction Contracts Clause A68, direct superintendence by the Contractor is required at all times during performance of this contract. Sandia defines direct superintendence as a full time effort performed by at least one individual employed by the Contractor. This individual shall not be a "working" superintendent. That is, he shall not have other daily assignments or duties beyond those required to properly plan, coordinate, arrange, and execute the work. Exceptions to this requirement only by written permission of the SDR.

I. Coordinate all work to assure efficient and orderly sequence of installation of construction elements; do not delegate responsibility for coordination to any subcontractor.

1. Make provisions for accommodating items installed by Sandia or under separate contracts.
2. Coordinate the work of subcontractors and material suppliers so that their work is performed in a manner to minimize interference, and to facilitate the progress of the work.
    a. Anticipate the interrelationship of all subcontractors and their relationship with the total work.
    b. Resolve differences or disputes concerning coordination, interference, or extent of work between sections.
    c. Verify that characteristics of interrelated operating equipment are compatible; coordinate work for installing, connecting to, and placing such equipment in service.

J. Coordinate space requirements and installation of mechanical and electrical work that are indicated diagrammatically on drawings.

1. Follow routing shown for pipes, ducts, and conduits as closely as possible; make runs parallel with lines of building.
2. Utilize spaces efficiently to maximize accessibility for other installations, maintenance, and repairs.
3. Do not obstruct spaces in front of electrical equipment, access doors, and other items.
4. Be responsible for seeing that anchorage, blocking, joining, and other detailing are provided to suit work.

K. Conceal pipes, ducts, and wiring in finished areas unless otherwise indicated; coordinate locations of fixtures and outlets with finish elements.

1. Do not cover any piping, wiring, ducts, or related items until properly inspected and approved.

PART 2 PRODUCTS - Not Used

PART 3 EXECUTION - Not Used

END OF DOCUMENT

SECTION 01010

SUMMARY OF WORK

PART 1 GENERAL

1.01 WORK COVERED BY CONTRACT DOCUMENTS

A. Work shall be performed at the site located at Sandia National Laboratories, Livermore, California (SNL/CA).

B. Furnish all labor, materials, tools, equipment, and services necessary for installation of the work herein specified.

C. *DescribeWork*

1.02 WORK UNDER OTHER CONTRACTS

A. Items noted "NIC" (Not In Contract) will be furnished and installed by Sandia or others under a separate contract.

1.03 FUTURE WORK

A. *Describe Future Work*

1.04 WORK SEQUENCE

A. *Describe Work Sequence*

1.05 CONTRACTOR USE OF PREMISES

A. Because of operations within the project areas, occasionally, on an average of one (1) day a month, the Contractor shall be required to completely withdraw from the work area to a location outside the security fence, or to a location as determined by the SDR for approximately one (1) hour each time. The Contractor shall coordinate and comply with these work interruptions.

1.06 SANDIA FURNISHED PRODUCTS

A. *List Sandia Furnished Products*

PART 2 PRODUCTS - Not Used

PART 3 EXECUTION - Not Used

END OF SECTION

SECTION 01030

ALTERNATES

PART 1 GENERAL

1.01 DESCRIPTION

A. This section identifies each alternate by number, and describes basic changes to be incorporated into the work, only when that alternate is made a part of the work by specific provisions in the construction contract.

B. Base bid and alternates shall include cost of all supporting elements required by building. Scope of work shall be in accordance with applicable drawings and specifications.

C. Coordinate pertinent related work and modify surrounding work as required to properly integrate the work under each alternate and provide the complete construction required by contract documents.

1.02 DESCRIPTION OF OPTIONS

A. Base Bid - *Describe Base Bid*

B. Bid Alternate 1 - *Describe Bid Alternates*

PART 2 PRODUCTS - Not Used

PART 3 EXECUTION - Not Used

END OF SECTION

SECTION 01060

REGULATORY REQUIREMENTS

PART 1 GENERAL

1.01 GENERAL

A. Any specific reference in specifications or drawings to codes, rules, regulations, standards, manufacturer's instructions, or requirements of regulatory agencies shall mean the latest printed edition of each in effect at date of submission of contract sum, unless the document is shown dated.

B. Perform work in conformance with the applicable requirements of the following:

1. AABC - Associated Air Balance Council
2. ASHRAE - American Society of Heating, Refrigerating and Air-Conditioning Engineers
3. IES - Illuminating Engineering Society of North America
4. NEBB - National Environmental Balancing Bureau
5. NEMA - National Electric Manufacturer's Association
6. SMACNA - Sheet Metal and Air-Conditioning Contractors' National Association, Inc.
7. BAAQMD - Bay Area Air Quality Management District

C. Perform work in conformance with the applicable requirements of the following codes and standards:

1. Federal Occupational Safety and Health Administration (OSHA)
2. Uniform Federal Accessability Standard (UFAS)
3. National Electrical Code (NEC), 2002 Edition
4. California Building Code, 2001 Edition
5. California Fire Code, 2001 Edition
6. California Mechanical Code, 2001 Edition
7. California Plumbing Code, 2001 Edition
8. Fire Alarm Code NFPA 72, 2002 Edition
9. Fire Sprinkler Code NFPA 13, 2002 Edition

1.02 CONFLICTS

A. Between Referenced Regulatory Requirements: Comply with the one establishing the more stringent requirements.

PART 2 PRODUCTS - Not Used

PART 3 EXECUTION - Not Used

END OF SECTION

SECTION 01061

METRIC REQUIREMENTS

PART 1 GENERAL

1.01 SANDIA'S INTENT

A. Perform all design in conformance with the intent of the latest edition of the GSA Metric Design Guide. This guide is published by the General Services Administration (GSA) Design and Construction Division, Region 3, Philadelphia, PA.

B. Perform all construction in metric units. Dual dimensions will not be shown on contract drawings. Contract specifications may show dual dimensions only if needed for clarity.

C. Continue to specify and use soft metric products. Soft metric products are those products constructed to non-metric dimensions but specified using nominal metric numbers obtained from conversion, i.e. soft conversion. Examples might include a 2 foot by 4 foot ceiling system described as 1200 mm by 2400 mm or #12 AWG conductor described as 4 mm2.

D. Any hard metric products will be clearly delineated as such in the Contract Documents. Hard metric products are those products constructed to metric dimensions, i.e. hard conversion.

1.02 CONTRACTOR'S RESPONSIBILITIES

A. Perform all construction in conformance with the intent of the latest edition of the GSA Metric Design Guide. This guide is published by the General Services Administration (GSA) Design and Construction Division, Region 3, Philadelphia, PA.

B. All discussions, correspondence, and documentation shall be in metric. Examples might include but are not limited to: meetings, site visits, inspections, submittals, requests for information (RFI's), construction change proposals (CCP's), progress billings, and progress schedules.

1.03 CONFLICTS

A. Bring any discrepancies or conflicts between metric and non-metric measurement systems to the immediate attention of Sandia in writing. Any and all problems caused by invalid assumptions and / or poor communication shall be corrected at the expense of the Contractor to the satisfaction of the SDR.

B. Sandia will reject and require resubmission of any and all written documentation which does not follow metric conventions unless prior written approval is secured from the SDR.

PART 2 PRODUCTS - Not Used

PART 3 EXECUTION - Not Used

END OF SECTION

SECTION 01090

REFERENCES

PART 1 GENERAL

1.01 ABBREVIATIONS

A. The following abbreviations of organizations may be used in the Contract Documents:

AAMA	Architectural Aluminum Manufacturers Association
AASHTO	American Association of State Highway and Transportation Officials
ACI	American Concrete Institute
AIA	American Institute of Architects
AIMA	Acoustical and Insulation Manufacturer's Association
AISC	American Institute of Steel Construction
ANSI	American National Standards Institute (formerly American Standards Association, ASA)
APA	American Plywood Association
ASHRAE	American Society of Heating, Refrigerating and Air-Conditioning Engineers
ASME	American Society of Mechanical Engineers
ASTM	American Society for Testing and Materials
AWPA	American Wood Preservers' Association
AWS	American Welding Society
AWWA	American Water Works Association
BHMA	Builders Hardware Manufacturers' Institute
CLFMI	Chain Link Fence Manufacturers' Institute

CRSI	Concrete Reinforcing Steel Institute
FGMA	Flat Glass Marketing Association
FM	Factory Mutual System, Factory Mutual Engineering Corporation
FS	Federal Specification
NEC	National Electrical Code
NEMA	National Electric Manufacturer's Association
NFPA	National Fire Protection Association
NIST	National Insitute of Standards
NRTL	Nationally Recognized Testing Laboratory
RIS	Redwood Inspection Service
SFM	State of California, Office of State Fire Marshal
SMACNA	Sheet Metal and Air-Conditioning Contractors' National Association, Inc.
TCA	Tile Council of America
UBC	Uniform Building Code
UL	Underwriters' Laboratories, Inc.
USS	United States Standard
WCLIB	West Coast Lumber Inspection Bureau
WIC	Woodwork Institute of California

B. Additional abbreviations, used on the drawings, or in the specifications, are listed thereon.

1.02 SYMBOLS

A. Symbols, used only on the drawings, are shown thereon.

1.03 DEFINITIONS

A. Terms used on the drawings or in the specifications shall have the following meanings:

TERM	MEANING
AS DIRECTED	- "By the SDR."
AS REQUIRED	- "By code; by good building practice; by the condition prevailing; by the contract documents; by Sandia."
AS SELECTED	- "By the SDR."
BENEFICIAL OCCUPANCY	- Sandia takes possession and uses Work or portions thereof that are functional and useful to Sandia.
BY OTHERS	- Work on this project that is outside the scope of work to be performed by the contractor under this contract, but that will be performed by Sandia, other contractor, or other means.
BY OWNER	- Work on this project that will be performed by Sandia, or its agents, at its cost.
DEFECTIVE	- An adjective which when modifying the word Work refers to Work that is unsatisfactory, faulty or deficient, or does not conform to the Contract Documents, or does not meet the requirements of any inspection, reference standard, test or approval referred to in the Contract Documents, or has been damaged prior to Sandia Delegated Representative's (SDR) recommendation of final payment unless responsibility for the protection thereof has been assumed by Sandia at substantial completion.
DESIGN CONCEPT	- The project's intended performance and fulfillment upon the final in-place assemblage and installations of the materials, equipment, components and system required by the Contract Documents.
DRAWINGS	- The graphic and pictorial portions of the Contract Documents which show the character and scope of the Work to be performed
EQUAL	- In the opinion of the SDR, the burden of proof is the responsibility of the contractor.
(E)	- Existing

(N)	- New
FINAL ACCEPTANCE	- All Work is complete, all required forms and paperwork have been submitted, and final payment is approved.
FINISH WORK	- Work that is visible as the final product. Includes final coat of paint, carpeting, and ceiling tile placement.
FURNISH	- "Supply only, do not install."
INSTALL	- "Install or apply only, do not furnish."
NIC	- Not in contract; work on this project that is outside the scope of work to be performed by the contractor under this contract
OFF SITE	- Outside the area described by the property lines.
PROJECT	- The project is the total construction of which the Work performed under the Contract Documents may be the whole or a part and which may include construction by Sandia or by separate contractors.
PROJECT INSPECTOR	- Inspector acting as Sandia representative for safety, workmanship, and compliance.
PROVIDE	- "Furnish and install."
REMOVE	- Remove and dispose of material off-site.
SANDIA-FURNISHED CONTRACTOR-INSTALLED	- "Sandia will furnish at its cost and contractor will install under the contract for this work."
SCR	- Sandia Contract Representative
SDR	- Sandia Delegated Representative
SHOWN	- "As indicated on the drawings."
SITE	- Geographical location of the project
SPECIFICATIONS	- The portions of the Contract Documents consisting of written technical descriptions of materials, equipment, construction systems, standards and workmanship as

applied to the Work and certain administrative details applicable thereto.

SPECIFIED - "As written in the Technical Specifications."

SUBSTANTIAL COMPLETION - All Work is functional for its intended purpose and useful to Sandia. Minor items or dificiencies may remain outstanding.

SUPPLIER - A manufacturer, fabricator, supplier, distributor, materialman or vendor.

TESTING LABORATORY - An independent firm employed by the SDR to perform inspections, tests, and other services.

WORK - The Work comprises the completed construction required by the Contract Documents and includes all labor necessary to produce such construction, and all material and equipment incorporated or to be incorporated in such construction. The Work may constitute the whole or a part of the project.

PART 2 PRODUCTS - Not Used

PART 3 EXECUTION - Not Used

END OF SECTION

SECTION 01100

SPECIAL PROJECT PROCEDURES

PART 1 GENERAL

1.01 HAZARDOUS MATERIAL PROCEDURES

A. Wastes generated during construction are considered hazardous wastes if they are listed waste under 40 CFR 261, Subpart D or are characteristic waste. Characteristic hazardous wastes are those that are ignitable, corrosive, reactive, or toxic. Construction wastes that can fall into one or more of these classifications are ignitable wastes, strong acids, bases, and solvents.

B. Handling of these wastes and the precautions necessary are dependent on the type and quantity of hazardous wastes generated. As a minimum, the following shall be practiced to insure environmental protection when dealing with hazardous wastes:

1. Proper container selection, compatible with the material being stored, and insuring that containers are not damaged.

2. Segregation of incompatible wastes.

3. Proper labeling with the words "Hazardous Waste," the contents of the container, and the accumulation start date.

4. Proper storage and secondary containment of hazardous wastes.

5. Provisions for spill mitigation and clean up.

C. OSHA Lead Construction Standard Guidance (note to specifier: use this paragraph when lead has been identified as a hazard in the building being modified)

1. OSHA Trigger Task

a. Construction operations defined as a trigger task by 29 CFR 1926.62 are prohibited by SNL until the lead hazard is removed. OSHA's trigger tasks are as follows:

(1) Manual demolition (i.e., using sledge hammers to demolish lead painted gypsum, plaster, etc.)

(2) Manual (or power tool) dry sanding, scraping, or grinding.

(3) Heat gun use.

(4) Spray painting with lead paint

(5) Welding, torch cutting, and burning.

(6) Abrasive blasting

(7) Any activity where a contractor suspects employee lead airborne exposure may exceed the OSHA permissible exposure limit (PEL) of 50 micrograms/meter cubed as an 8 hour time weighted average (TWA).

b. The above construction operations are tasks that are known to create unacceptable quantities of dust or vapor and are presumed to create employee exposures above the OSHA PEL. As such they have a higher restriction on the activity. Until employee exposure air monitoring indicates otherwise, an employer is required to provide respiratory protection appropriate to the task's presumed exposure level, protective clothing and equipment, change areas, hand-washing facilities, training, and initial medical surveillance.

2. Non-trigger Task

a. Some construction operations impact lead, but are not listed as a trigger task in 29 CFR 1926.62. Following are some examples:

(1) Drilling or cutting into lead painted surfaces

(2) Wet sanding or scraping lead painted surfaces

(3) Removing lead-based paint with a SNL approved stripper

(4) Removing intact building components (wall systems, windows, doors, door frames, etc,)

(5) Installing fasteners and brackets to surfaces coated with lead based paint

b. When performing non-trigger task operations, a contractor can substantially reduce employee exposure to lead by:

(1) Lead hazard awareness education and training

(2) Encouraging employees to stop work and contact their competent person/safety officer when concerns related to lead exposure arise.

(3) Using work practices that reduce the generation of lead dust.

(4) Practice good housekeeping

(5) Practice good personal hygiene

c. With respect to 29 CFR 1926.62 and performing non-trigger task operations, each contractor is responsible for assessing the work methods and procedures to ensure that their employees are not being exposed above the PEI.

d. It is SNL's intent to identify all lead hazards associated with a project prior to the start of construction. However, the possibility exists that not all lead hazards associated with a project will be identified and/or removed. Anytime questions arise as to whether a painted surface contains lead, the contractor competent person or workers are empowered to stop work and contact the SDR for a determination.

1.02 SECURITY PROJECT PROCEDURES

A. Persons entering Sandia National Laboratories are subject to security controls required by the Department of Energy (DOE).

B. All contractor personnel requiring access to the construction site and security areas shall be U. S. Citizens. Sandia Security reserves the right to assure that this requirement is satisfied.

C. Principle Construction Site and Security Area

1. The principle work under this contract will be performed within the boundaries of the construction site as shown on the contract drawings. Access to the site will be as indicated.

2. Site access during off hours may be arranged with SDR.

3. All of the work under this contract will be performed in security areas as shown on the contract drawings. Contractor personnel and vehicles requiring access to the security area will be subject to security controls required by DOE. Contractor personnel will be permitted into the security area only under Sandia Security escort.

4. Security badges will be required for all contractor personnel within the construction site and security area, and will be obtained from Sandia Security in Building 911. Each person will be required to present identification and fill out a short form questionnaire prior to initial access to the construction site.

5. Entry to the security area will be at the locations designated by Sandia Security.

6. Contractors, contractor vehicles, and all on-board materials and containers will be subject to search by security guards upon entering or leaving principal construction site and the security area. Contractor vehicles will require permits which are obtainable from the Sandia Security Office. A valid driver's license must be presented to obtain a vehicle permit.

7. Prior to initial entry into the principle construction site and security area, the contractor shall furnish to the SDR a letter listing:

    a. The names and addresses of all subcontractor organizations.

    b. Personnel data as specified in Article A67 of Section II of this specification.

    c. Any known deviation from normal workday or workweek periods as specified in Article A67 of Section II of this specification.

    d. The period of time anticipated for completion of the contractor's work within the security area.

    e. The Sandia Security Office shall be notified of the termination of employment of persons for whom access had been requested. Sandia Security reserves the right to exclude from the area any contractor employee as deemed appropriate.

8. Forty-eight (48) hour notice shall be given to the Sandia Security Office by the Contractor prior to initial entry to the security area. The Contractor shall give twenty-four (24) hours advance notice when additional escorts will be needed for unusual situations. Security escort is limited by the number of personnel available in conjunction with other work in progress. The Contractor should plan such that security escort service can be scheduled one week in advance. It may not be possible to provide more than one security escort for the entire work crew of the Contractor. When this arrangement is necessary, no member of the crew may leave the immediate vicinity of the work area, for any reason whatsoever unless he is accompanied by all other members of the crew and the escort. The Contractor is advised that all tools, materials, and supplies should accompany the crew when first entering the work area in order to minimize stoppage of the entire job for individual needs.

9. Normal Working Hours: Construction operations within the principal construction site and the security area shall be limited to the hours between 7:00 a.m. and 3:30 p.m., Monday through Friday, except weekends or holidays. Contractor personnel must be clear of the principal construction site and the security area by 3:30 p.m. during normal working days.

10. Other Than Normal Working Hours: By special arrangement and approval by the SDR.

D. Except as provided below, the following items shall not be brought within the limits of the construction site or security area:

1. Photographic equipment

2. Explosives or incendiaries in any form except explosive actuated fastener tools.

3. Guns, ammunition, or similar weapons

4. Telescopes or binoculars

5. Electronic sending and receiving devices, including FCC licensed mobile radios.

6. Narcotics and alcoholic beverages

7. Poisonous or corrosive solids, liquids, or gases

8. Recording devices and recording tapes

E. If any of the items listed are required by a Contractor for the execution of work, the Contractor must receive written permission from Sandia Security for each item brought into the site. The request for permission must state the need, the period of time the item will be required, and the person responsible for its use. Those items permitted must be removed from the site immediately upon the termination of their need or the termination of the period stated in the Contractor's request. All items listed above may be confiscated if they are brought into the site without permission, or if they are being used for purposes other than those stated in the request.

F. Any Contractor requiring telescoping type surveying equipment for performance of work shall submit a written request to secure SDR approval to bring such equipment onto the site. The request shall list each item of equipment required. Contractor shall not bring this type of equipment on site until written permission is received from the SDR.

G. No storage of materials, parking of vehicles or equipment, and/or placement of job offices or temporary storage buildings will be allowed within 15 m (50 feet) of any permanent structure, 6 m (20 feet) of any security fence or gate, or 3 m (10 feet) of existing utilities including manholes, power poles, valve boxes, cleanouts, or service access areas, except where specifically designated otherwise.

H. Contractor shall not make any penetrations over, under, or through existing security fences, barricades, walls, or roofs located within or on the perimeter of the security area without permission of SDR. Any such penetrations required under this contract shall be performed under security escort. Such penetration shall be secured at the end of each working day to the satisfaction of Sandia Security.

1.03 INTERRUPTION OF SERVICES PROCEDURES

A. Notify the SDR forty-eight (48) hours prior to any interruption in service.

B. All service interruptions which effect areas outside the designated work area shall be performed during off-hours unless written approval is secured from the SDR.

1.04 PRESERVATION PROCEDURES

A. Sandia designates the SDR as the duly appointed monitor to ensure that aboriginal and historic cultural materials be preserved and to ascertain whether or not construction may continue after the accidental exposure of any cultural materials. The monitor has the authority to temporarily halt construction operations in the immediate vicinity of an archaeological find if significant or potentially significant cultural resources are exposed and/or adversely affected by construction operations. For the purposes of this paragraph, immediate vicinity shall be construed to be an area within twenty-five (25) meters of a find or resource exposure. Upon notice from the SDR, the Contractor shall immediately halt construction operations in the immediate vicinity of the said find pending a determination by the monitor of the significance of the initial discovery.

1.05 APPROVAL TO START CONSTRUCTION PROCEDURES

A. No work shall take place until written approval to start construction is given by the SDR. Approval will not be given until all pre-work requirements have been completed to the satisfaction of the SDR. The completed and signed Pre-work Check List (Attachment 'A') shall serve as the Contractor's authorization to begin construction.

1.06 EXCAVATED MATERIAL DISPOSAL PROCEDURES

A. The Contractor shall load, haul, and spread acceptable excavated material to an area on site designated by the SDR. Acceptable excavated material shall not be disposed of off site. Unacceptable materials such as debris, rock, asphalt concrete paving, concrete, and extracted plant life shall be removed and disposed of legally off site.

1.07 UNION BUSINESS REPRESENTATIVE HOSTING PROCEDURE

A. The purpose of this procedure is to describe the hosting requirements for business representatives from a local union or district council who file a request to visit a Sandia jobsite for the purpose of a safety inspection or in response to a safety-related or other contractual grievance.

B. Upon receipt of such request the Contractor shall submit written documentation to the SDR that includes the following:

   1. Name(s) and affiliation of the person(s) requesting access

   2. Date and anticipated duration of the visit

   3. Location of the jobsite; specific area of concern; point of contact

   4. Reason for the visit with contractual justification stated

C. Upon written approval from the SDR, the Contractor shall schedule, coordinate, and host the visit in accordance with security procedures described elsewhere in the Contract Documents. The contractor shall ensure:

   1. Access is restricted to the jobsite and location stated above

   2. Discussions are limited to the subject matter identified above

   3. Visitors are under constant escort / supervision by the Contractor and accompanied by the SDR or his designee while on Sandia property.

PART 2 PRODUCTS - Not Used

PART 3 EXECUTION - Not Used

END OF SECTION

SECTION 01100

SPECIAL PROJECT PROCEDURES

ATTACHMENT

Attachment 'A'Pre-work Check List (1 Page)

PRE-WORK CHECK LIST

Project Number: Number
Project Name: Name
SDR / Project Mgr.: Name
Contract Number: Number
Contractor: Name
Superintendent: Name

Facilities Manager Approval to Start Construction: Name

Date: Date

Date / Initials	Item and Action Required	
	1.	Project Safety and Health Plan Submitted and Approved
	2.	Hazard Analysis Submitted and Approved
	3.	Progress Schedule Submitted and Approved
	4.	Personnel List Submitted
	5.	Preconstruction Conference Completed
	6.	Facility Work Permits Identified / Obtained
	7.	Construction Fencing / Barriers Installed
	8.	Hidden Hazard Survey Performed
	9.	Safety Related Work Controls in Place
	10.	Storm Water Pollution Prevention Measures Taken
	11.	Property Survey Completed
	12.	Construction Site
	a.	Job Trailer Installed
	b.	Electrical Service Installed
	c.	Telephone Service Installed
	d.	Water Service Installed
	e.	Potable Water Available
	f.	Toilet Facilities Available
	g.	Fire Extinguishers Available
	h.	First Aid Kits Available
	i.	Signage Posted
	j.	Complete Bid Package at Site
	k.	Required OSHA Documents at Site
	l.	Safety Bulletin Board Complete and Posted
	13.	Notice to Proceed Given by SCR
	14.	*Other*

SECTION 01200

PROJECT MEETINGS

PART 1 GENERAL

1.01 PRECONSTRUCTION CONFERENCE

A. Prior to commencement of work, a preconstruction conference shall be held.

B. Location: A site as convenient as possible for all parties, designated by the SDR.

C. Attending shall be:

1. Sandia Delegated Representative
2. Sandia Contracting Representative
3. Project Inspectors
4. Sandia Project Representatives
5. Contractor
6. Contractor's Superintendent
7. Major Subcontractors
8. Others as appropriate.

1.02 PROGRESS MEETINGS

A. The SDR will prepare agenda, schedule, and hold periodic meetings as required by the progress of the work.

B. Location: Same as "B" above.

C. Attending shall be:

1. Sandia Delegated Representative
2. Project Inspectors
3. Sandia's Project Representatives, as appropriate to the agenda
4. Contractor
5. Contractor's Superintendent
6. Subcontractors, as appropriate to the agenda
7. Suppliers, as appropriate to the agenda
8. Others, as appropriate to the agenda.

1.03 SUBMITTAL MEETINGS

A. Prior to the submission of critical items, a submittal meeting shall be held. The intent of this meeting will be to share ideas, answer questions, and agree on submittal content / format in order to expedite the process. Items Sandia feels are

critical have been identified in Specification Section 01300 Submittals and are subject to change / modification as the work dictates.

B. Location: Same as "B" above.

C. Attending shall be:

1. Sandia Delegated Representative
2. Sandia's Project Representatives, as appropriate to the agenda
3. Contractor
4. Contractor's Superintendent
5. Subcontractors, as appropriate to the agenda
6. Suppliers, as appropriate to the agenda
7. Others, as appropriate to the agenda.

1.04 SAFETY MEETINGS

A. In support of safety assurance, Sandia reserves the right to schedule and hold weekly one (1) hour safety meetings as dictated by the progress of the work. The topic for discussion shall be chosen by the SDR or his designee. Safety meetings shall take place as follows and all costs / delays associated with such meetings shall be borne by the Contractor and deemed within the scope of the contract:

B. Location: Same as "B" above.

C. Attendance shall be mandatory for the following:

1. Sandia Delegated Representative or his designee
2. Contractor’s Project Manager
3. Contractor’s Safety Officer
4. Contractor's Superintendent
5. All workers on site at the time of the meeting
6. Others, as appropriate.

PART 2 PRODUCTS - Not Used

PART 3 EXECUTION - Not Used

END OF SECTION

SECTION 01300

DESCRIPTIVE SUBMITTALS

PART 1 GENERAL

1.01 GENERAL PROCEDURES

A. Provide to the SDR all submittals in accordance with the submittal schedule requirements found in Specification Section 01310 Progress Schedules.

B. Following the Contractor's review and approval, stamp each submittal as approved, identify with Specification Section or Drawing number in which specified, and submit at Contractor's expense to the SDR:

1. A maximum of six (6) copies of each submittal, i.e., drawings, brochures, catalog cuts, drawings, etc. Three (3) copies will be retained by Sandia and the rest returned to the Contractor.

C. Provide submittals for material and equipment items forming a complete assembly or a system simultaneously. Partial submittals will not be accepted. Multiple submittals for the same product or system by different manufacturers will not be accepted. Sandia will only review those products intended for direct use in connection with work under the contract.

D. Prepare required drawings using the same dimension and scale as the contract drawings. Any Sandia computer generated contract documents will be furnished to the Contractor electronically upon written request.

E. All submittals shall conform to the General Services Administration (GSA) Metric Design Guide. To assist contractors and manufacturers with metric conversion, the following submittal classes shall be utilized and adhered to without exception. Any submittal not conforming to the submittal classes described herein will immediately be rejected.

1. Class 1: Drawings that must be metric only - English units are not permitted on these submittals. Drawings shall use metric scales only. In general, any drawing that is job specific, and is custom generated for this contract, shall be in metric only. Examples might include but are not limited to: floor plans, reflected ceiling drawings, stairwell erection drawings, foundation wall drawings, concrete / rebar installation drawings, site work drawings, sheeting and shoring plans, steel erection / fabrication drawings and details, precast manhole drawings, door schedules, wall paneling drawings, caisson details, millwork drawings, cabinet work details, toilet room details, ductwork

submittals, pipe installation drawings, HVAC schedules, switchgear drawings, electrical component layout drawings, and signage drawings.

2. Class 2: Data that must be metric only - Primarily, any data generated specifically for this contract shall be submitted in SI only. Examples might include but are not limited to: concrete design mixes, concrete test data, core bore depths and data, aggregate mixes, mechanical air and water flow or balancing data, environmental or hazardous material data, most test data of various natures, other data generated for this contract, not in bound, preprinted catalogs or publications.

3. Class 3: Metric supplement required - Requires existing preprinted literature to be supplemented to show conformance with the requirements stated in the specifications and / or on the drawings. Supplements can be bond paper, handwritten or typed on existing literature, or by other approved methods acceptable to the SDR. Examples might include but are not limited to: steel deck data, epoxy adhesive data, preprinted mechanical and electrical equipment catalogs including boilers, AHU's, chillers, terminal units, exhaust fans, switchgear, pumps, transformers, panelboards, UPS systems, lighting systems, fire alarm systems, intrusion alarm systems, communication systems, public address systems, elevator component data, bathroom component data, mini-blind data, roof hatch sizes, metal ceiling grid data, access floor tile data, plumbing fixture data, metal stud data, structural bolt data, paint literature, formwork release agent data, and valve, pipe, conduit, enclosure, and fitting data.

1.02 REVIEW

A. Review of any submittal shall not relieve the Contractor from responsibility for any changes, errors, or omissions in any submittal, nor from the responsibility for complying with the contract requirements, except where variations are clearly shown and specifically described in the submittal as variations.

1.03 SUBSTITUTIONS

A. Whenever materials or equipment are specified or described in the Contract Documents by using the name of a proprietary item or the name of a particular supplier, the naming of the item is intended to establish the type, function, and level of quality required. Substitutions shall not be made if the words “no substitutions” follows the item designation. If “no substitutions” is not specified then substitutions may be made if sufficient information is submitted by the Contractor to allow the SDR to determine that the material or equipment proposed is equivalent to that named.

B. If the Contractor wishes to furnish or use a substitute item of material or equipment, make written application to the SDR for acceptance thereof, certifying that the proposed substitute will perform equally the functions and achieve the results called for by the general design, be similar and of equal substance to that specified, and be suited to the same use as that specified. The application shall state that the evaluation and acceptance of the proposed substitute will not prejudice the Contractor's achievement of substantial completion on time, whether or not acceptance of the substitute for use in the Work will require a change in any of the Contract Documents to adapt the design to the proposed substitute, and whether or not incorporation or use of the substitute in connection with the Work is subject to payment of any license fee or royalty. All variations of the proposed substitute from that specified shall be identified in the application and available maintenance, repair, and replacement service shall be indicated. The application shall also contain an itemized estimate of all costs that will result directly or indirectly from acceptance of such substitute, including costs of redesign and claims of other contractors affected by the resulting change. The SDR may require the Contractor to furnish at Contractor’s expense, additional data about the proposed substitute.

C. If specific means, methods, techniques, sequences, or procedures of construction are indicated in or required by the Contract Documents, the Contractor may furnish or utilize substitute means, methods, sequences, techniques, or procedures of construction acceptable to the SDR. The Contractor shall submit sufficient information to allow the SDR to determine that the substitute is equivalent to that indicated or required by the Contract Documents. The procedure for review by the SDR will be similar to that provided above for material or equipment substitutions.

D. The SDR will be allowed a reasonable amount of time to evaluate each proposed substitute. The SDR will be the sole judge of acceptability, and no substitute shall be ordered, installed or utilized without the SDR's prior written acceptance. Sandia may require the Contractor to furnish at Contractor’s expense, a special performance guarantee or other surety with respect to any substitute. The SDR will record the costs associated with evaluating substitutions proposed by Contractor and in making changes in the Contract Documents occasioned thereby.

1.04 DESCRIPTIVE SUBMITTAL LIST

A. CSI Section and CSI Title: The first two columns list a numeric and descriptive reference to the contract document that presents the full description of the required submittals.

B. Required Submittals: The third column lists the types of submittals required by each contract document reference.

C. Date Expedited: The fourth column represents the date that Sandia should expect to receive the submittal from the Contractor for initial review. This column shall be completed by the Contractor and submitted to Sandia. Data to complete this column will be generated in connection with compliance under Specification Section 01310 Progress Schedules.

D. A list of the submittals required is presented on the following pages. However, additional information pertaining to submittals under each section may be contained within each section

CSI Section	CSI Title	Required Submittals	Date Expected
	BIDDING REQUIREMENTS, CONTRACT FORMS, AND CONDITIONS OF THE CONTRACT		
	SECTION I	-	
	SECTION II	-	
	SECTION III	-	
00120	SUPPLEMENTARY INSTRUCTIONS TO BIDDERS	-	
00230	EXISTING CONDITIONS	-	
00700	GENERAL CONDITIONS	-	
	DIVISION 1 GENERAL REQUIREMENTS		
01010	SUMMARY OF WORK	-	
01030	ALTERNATES	-	
01060	REGULATORY REQUIREMENTS	-	
01061	METRIC REQUIREMENTS	-	
01090	REFERENCES	-	

CSI Section	CSI Title	Required Submittals	Date Expected
01100	SPECIAL PROJECT PROCEDURES	Schedule or List	
01200	PROJECT MEETINGS	-	
01300	DESCRIPTIVE SUBMITTALS	Schedule or List	
01310	PROGRESS SCHEDULES (LARGE PROJECTS)	Schedule or List	
01311	PROGRESS SCHEDULES (SMALL PROJECTS)	Schedule or List	
01400	QUALITY CONTROL	-	
01510	TEMPORARY UTILITIES	-	
01505	CONSTRUCTION WASTE MANAGEMENT	Program Report	
01525	CONSTRUCTION AIDS	-	
01550	ACCESS ROADS AND PARKING AREAS	-	
01560	TEMPORARY CONTROLS	-	
01570	TRAFFIC REGULATION	Schedule or List	
01590	FIELD OFFICES AND SHEDS	-	
01610	DELIVERY, STORAGE, AND HANDLING	-	
01720	PROJECT RECORD DOCUMENTS	Program Shop Drawings	
01860	SAFETY PROVISIONS	Certification Program Schedule or List	

CSI Section	CSI Title	Required Submittals	Date Expected
	DIVISION 2 SITEWORK		
02051	SITE DEMOLITION	-	
02082	ASBESTOS ABATEMENT	Calculations Certification Program Report Shop Drawing	
02110	CLEARING AND GRUBBING	-	
02210	SITE GRADING	-	
02220	STRUCTURAL EXCAVATION AND BACKFILL	-	
02221	TRENCH EXCAVATION AND BACKFILL	-	
02244	CHAIN LINK FENCE AND GATES	Catalog Information	
02250	COMPACTION CONTROL AND TESTING	Report	
02261	TOPSOIL	Report	
02350	DRILLED PIERS	Calculations Certifications Report	
02430	INLETS AND HEADWALLS	Catalog Information	
02485	TURF	Certification	
02490	TREES, SHRUBS, AND GROUNDCOVER	Catalog Information Certification Warranty	

CSI Section	CSI Title	Required Submittals	Date Expected
02501	PORTLAND CEMENT CONCRETE SIDEWALK	Calculations Catalog Information Report	
02513	ASPHALTIC CONCRETE PAVING	Calculations Catalog Information	
02514	PORTLAND CEMENT CONCRETE PAVING	Calculations Catalog Information Report	
02515	INTERLOCKING CONCRETE PAVERS	Catalog Information Certification Sample	
02516	PAVEMENT MARKINGS (PAINT)	Catalog Information	
02532	STABILIZED AGGREGATE BASE COURSE	Certification	
02601	MANHOLES AND CLEANOUTS	Catalog Information	
02610	PIPE AND FITTINGS - GENERAL	Catalog Information	
02644	FIRE HYDRANTS	Catalog Information Certification	
02651	STORM DRAINAGE SYSTEM - ROOF	Catalog Information	
02653	FUEL STORAGE TANK	Catalog Information	
02700	SITE IRRIGATION SYSTEM	Catalog Information Operating and Maintenance Manuals Shop Drawing Warranty	
02701	LEAKAGE TESTS	-	

CSI Section	CSI Title	Required Submittals	Date Expected
02711	GAS SYSTEM	Catalog Information	
02713	SITE DOMESTIC WATER SYSTEM	Catalog Information Certification	
02717	SITE FIRE WATER SYSTEM	Catalog Information Certification	
02721	STORM SEWERAGE SYSTEMS	Catalog Information Certification Warranty	
02722	SANITARY SEWERAGE AND ACID WASTE SYSTEMS	Catalog Information Certification	
02723	FLOW MONITORING SYSTEM	Certification Report Sample Shop Drawing	
02735	LIQUID EFFLUENT SYSTEM VAULT	Catalog Information Report Sample Shop Drawing	
02870	CAST IRON TREE GRATES	Catalog Information	
02875	LITTER RECEPTABLES	Catalog Information	
02890	PEDESTRIAN BRIDGE	Calculations Catalog Information Certification Shop Drawing	
	DIVISION 3 CONCRETE		
03100	CONCRETE FORMWORK	Catalog Information	
03200	CONCRETE REINFORCEMENT	Catalog Information Certification	

CSI Section	CSI Title	Required Submittals	Date Expected
03300	CAST-IN-PLACE CONCRETE	Calculations Catalog Information Certification Report	
03353	ARCHITECTURAL CONCRETE	Report Sample	
03450	ARCHITECTURAL PRECAST-PRESTRESSED CONCRETE	Calculations Report Sample Shop Drawing	
	DIVISION 4 MASONRY		
	DIVISION 5 METALS		
05100	STRUCTURAL METAL FRAMING	Catalog Information Report Shop Drawing	
05200	STEEL JOISTS	Calculations Catalog Information Report	
05300	METAL DECKING	Catalog Information Shop Drawing	
05400	COLD-FORMED METAL FRAMING	Catalog Information Shop Drawing	
05500	METAL FABRICATIONS	Catalog Information Shop Drawing	
05510	METAL STAIRS	Shop Drawing	
05520	HANDRAILS AND RAILINGS	Catalog Information	

CSI Section	CSI Title	Required Submittals	Date Expected
05530	FLOOR PLATE AND GRATING	Catalog Information Shop Drawing	
05801	INTERIOR EXPANSION JOINTS	Catalog Information Shop Drawing	
05802	EXTERIOR EXPANSION JOINTS	Catalog Information Shop Drawing	
	DIVISION 6 WOOD AND PLASTIC		
	DIVISION 7 THERMAL AND MOISTURE PROTECTION		
07160	BITUMINOUS DAMPPROOFING	Catalog Information Installation Instructions	
07210	BUILDING INSULATION	Catalog Information Installation Instructions	
07220	ROOF AND DECK INSULATION	Catalog Information Installation Instructions	
07241	EXTERIOR INSULATION AND FINISH SYSTEM	Catalog Information Certification Installation Instructions Sample	
07270	FIRESTOPPING	Catalog Information Installation Instructions	
07410	PREFORMED WALL AND ROOF PANELS	Catalog Information Certification Installation Instructions Shop Drawing	
07530	FLEXIBLE SHEET ROOFING SYSTEM	Catalog Information Installation Instructions Warranty	

CSI Section	CSI Title	Required Submittals	Date Expected
07600	FLASHING AND SHEET METAL	Shop Drawing	
07610	METAL ROOFING	Catalog Information Installation Instructions Sample Shop Drawing	
07631	GUTTERS	Catalog Information Certification Installation Instructions Shop Drawing	
07830	ROOF HATCHES	Catalog Information Installation Instructions Shop Drawing	
07850	PREFABRICATED CURBS	Catalog Information Installation Instructions Shop Drawing	
07900	SEALANTS	Catalog Information Certification Installation Instructions Report	
07910	JOINT FILLERS AND GASKETS	Catalog Information Sample	
	DIVISION 8 DOORS AND WINDOWS		
	DIVISION 9 FINISHES		
09260	GYPSUM WALLBOARD	Certification Installation Instructions	

CSI Section	CSI Title	Required Submittals	Date Expected
09310	CERAMIC TILE	Catalog Information Certification Installation Instructions Sample	
09510	ACOUSTICAL CEILINGS	Catalog Information Sample Shop Drawing	
09650	RESILIENT FLOORING	Catalog Information Sample Warranty	
09680	CARPETING	Catalog Information Operating and Maintenance Manuals Sample Shop Drawing Warranty	
09702	RESINOUS FLOORING (EPOXY)	Catalog Information Sample	
09900	PAINTING	Catalog Information Sample Schedule or List	
09952	VINYL WALL COVERING	Catalog Information Operating and Maintenance Manuals Sample	
09986	FIBERGLASS WALL PANELS	Catalog Information Installation Instructions Operating and Maintenance Manuals Sample	
	DIVISION 10 SPECIALITIES		
10270	ACCESS FLOORING	Catalog Information Certification Sample Shop Drawing	

CSI Section	CSI Title	Required Submittals	Date Expected
	DIVISION 11 EQUIPMENT		
11610	FUME HOODS	Catalog Information Certification Shop Drawing	
	DIVISION 12 FURNISHINGS		
12610	MODULAR FURNITURE SYSTEMS	Catalog Information Certification Schedule or List Shop Drawing	
	DIVISION 13 SPECIAL CONSTRUCTION		
13122	CHEMICAL STORAGE SHEDS	Catalog Information Certification Shop Drawing	
	DIVISION 14 CONVEYING SYSTEMS		
	DIVISION 15 MECHANICAL		
15010	BASIC MECHANICAL REQUIREMENTS	Calculations Catalog Information Certification Installation Instructions Operation and Maintenance Manuals Program Report Shop Drawing Warranty	
15030	ELECTRICAL REQUIREMENTS FOR MECHANICAL EQUIPMENT	-	

CSI Section	CSI Title	Required Submittals	Date Expected
15050	BASIC MECHANICAL MATERIALS AND METHODS	Catalog Information Certification Report	
15100	VALVES	Catalog Information Installation Instructions Report	
15130	METERS AND GAUGES	Catalog Information	
15140	SUPPORTS AND ANCHORS	Catalog Information Installation Instructions Shop Drawing	
15175	VARIABLE FREQUENCY DRIVES	Catalog Information Installation Instructions	
15190	MECHANICAL IDENTIFICATION	Catalog Information Sample Schedule or List	
15195	LABORATORY AND SPECIAL EQUIPMENT (ROUGH-IN AND CONNECT)	Shop Drawing	
15200	SEISMIC PROTECTION FOR MECHANICAL SYSTEMS	Calculations Catalog Information Certification Report Shop Drawing	
15240	MECHANICAL SOUND AND VIBRATION CONTROL	Calculations Catalog Information Certification Installation Instructions Operation and Maintenance Manuals Report Shop Drawing Warranty	
15250	MECHANICAL INSULATION	Catalog Information Installation Instruction	

CSI Section	CSI Title	Required Submittals	Date Expected
15330	AUTOMATIC FIRE SPRINKLER SYSTEM(DESIGN AND INSTALL)	Calculations Catalog Information Certification Report Shop Drawing	
15331	AUTOMATIC FIRE SPRINKLER SYSTEM(NO DESIGN/ INSTALL ONLY)	Calculations Catalog Information Certification Report Shop Drawing	
15400	PLUMBING-GENERAL	Catalog Information Installation Instructions Shop Drawing Warranty	
15405	SOIL, WASTE, AND VENT PIPING SYSTEMS	Catalog Information Installation Instructions Shop Drawing Warranty	
15406	STORM DRAINAGE SYSTEMS	Catalog Information Installation Instructions Shop Drawing Warranty	
15411	WATER DISTRIBUTION PIPING	Catalog Information Installation Instructions Shop Drawing Warranty	
15430	PLUMBING SPECIALTIES	Catalog Information Installation Instructions Shop Drawing Warranty	
15440	PLUMBING FIXTURES	Catalog Information Installation Instructions Shop Drawing Warranty	

CSI Section	CSI Title	Required Submittals	Date Expected
15445	ELECTRIC WATER COOLERS	Catalog Information Installation Instructions Operation and Maintenance Manuals Shop Drawing Warranty	
15453	PLUMBING PUMPS	Catalog Information Installation Instructions Operation and Maintenance Manuals Shop Drawing Warranty	
15458	DOMESTIC WATER HEATER	Catalog Information Installation Instructions Operation and Maintenance Manuals Shop Drawing Warranty	
15459	ELECTRIC WATER HEATERS (LESS THAN 85 GALLONS)	Catalog Information Installation Instructions Operation and Maintenance Manuals Shop Drawing Warranty	
15460	ELECTRIC BOOSTER WATER HEATERS	Catalog Information Installation Instructions Operation and Maintenance Manuals Shop Drawing Warranty	
15481	COMPRESSED AIR PIPING AND EQUIPMENT	Catalog Information Installation Instructions Operation and Maintenance Manuals Report Shop Drawing Warranty	
15483	FUEL OIL SYSTEMS	Catalog Information Installation Instructions Operation and Maintenance Manuals Shop Drawing	

CSI Section	CSI Title	Required Submittals	Date Expected
15488	NATURAL GAS PIPING SYSTEM	Catalog Information	
15492	LIQUID EFFLUENT SYSTEM	Catalog Information Installation Instructions Operation and Maintenance Manuals Shop Drawing Warranty	
15493	LABORATORY DRAINAGE SYSTEMS	Catalog Information Operation and Maintenance Manuals Shop Drawing	
15494	LABORATORY SUPPLY SYSTEMS	Catalog Information Operation and Maintenance Manuals Shop Drawing	
15498	LABORATORY SUPPLY SYSTEMS (LIQUID NITROGEN)	Catalog Information Operation and Maintenance Manuals Shop Drawing	
15510	HYDRONIC PIPING	Catalog Information Shop Drawing	
15512	UNDERGROUND PIPING SYSTEMS (PRE-INSULATED)	Catalog Information Certification Installation Instructions Shop Drawing	
15515	HYDRONIC SPECIALTIES	Catalog Information Operation and Maintenance Manuals	
15516	COOLING TOWER SEPARATOR	Catalog Information Shop Drawing	
15534	TOTAL FLOOD CLEAN AGENT FIRE SUPRESSION SYSTEM	Catalog Information Installation Instructions Operation and Maintenance Manuals Shop Drawing Warranty	

CSI Section	CSI Title	Required Submittals	Date Expected
15540	HVAC PUMPS	Catalog Information Installation Instructions Operation and Maintenance Manuals Shop Drawing Warranty	
15545	DEIONIZED COOLING WATER SYSTEM	Catalog Information Installation Instructions Operation and Maintenance Manuals Shop Drawing Warranty	
15555	HOT WATER BOILER (FIRETUBE)	Catalog Information Certification Installation Instructions Operation and Maintenance Manuals Shop Drawing Warranty	
15559	STEEL WATER TUBE BOILERS	Catalog Information Certification Installation Instructions Operation and Maintenance Manuals Shop Drawing Warranty	
15573	FIRETUBE BOILER ANNUCIATOR PANELS	Catalog Information Shop Drawing	
15576	CHIMNEY FLUE AND VENTS	Catalog Information Certification Installation Instructions Operation and Maintenance Manuals Shop Drawing	
15685	CENTRIFUGAL AND ROTARY SCREW FLUID CHILLERS	Catalog Information Certification Installation Instructions Operation and Maintenance Manuals Shop Drawing	

CSI Section	CSI Title	Required Submittals	Date Expected
15715	PACKAGED COOLING TOWERS-STEEL	Catalog Information Certification Installation Instructions Operation and Maintenance Manuals Shop Drawing	
15716	PACKAGED COOLING TOWERS-STEEL (DEIONIZED COOLING WATER)	Catalog Information Certification Installation Instructions Operation and Maintenance Manuals Shop Drawing	
15717	COOLING TOWER FIELD ASSEMBLED	Catalog Information Certification Installation Instructions Operating and Maintenance Manuals Shop Drawing	
15747	CONDENSER WATER TREATMENT SYSTEM	Catalog Information Certification Operation and Maintenance Manuals Shop Drawing	
15755	HEAT EXCHANGERS	Catalog Information Certification	
15777	COMPUTER ROOM AIR CONDITIONING SYSTEMS	Catalog Information Certification Installation Instructions Operation and Maintenance Manuals Shop Drawing	
15788	PACKAGED AIR CONDITIONERS (THRU THE WALL HEAT PUMP)	Catalog Information Certification Installation Instructions Operation and Maintenance Manuals Shop Drawing	
15790	COILS	Catalog Information Certification	
15812	AIR WASHERS	Catalog Information	

CSI Section	CSI Title	Required Submittals	Date Expected
15855	AIR HANDLING UNITS	Catalog Information Certification Installation Instructions Operation and Maintenance Manuals Shop Drawing	
15856	DRY AIR HANDLING UNITS	Catalog Information Certification Installation Instructions Operation and Maintenance Manuals Shop Drawing	
15860	CENTRIFUGAL FANS	Catalog Information Certification Installation Instructions Operation and Maintenance Manuals Shop Drawing	
15865	AXIAL FANS	Catalog Information Certification Installation Instructions Operation and Maintenance Manuals Shop Drawing	
15870	POWER AND GRAVITY VENTILATORS	Catalog Information Certification Installation Instructions Operation and Maintenance Manuals Shop Drawing	
15884	AUTOMATIC ROLL FILTERS	Catalog Information Certification Installation Instructions Operation and Maintenance Manuals Shop Drawing	
15885	AIR CLEANING	Catalog Information	
15891	METAL DUCTWORK	Catalog Information Certification Operation and Maintenance Manuals Shop Drawing	

CSI Section	CSI Title	Required Submittals	Date Expected
15895	SPECIAL DUCTWRK SYSTEMS	Catalog Information Certification Operation and Maintenance Manuals Shop Drawing	
15896	HVAC CASINGS	Catalog Information Shop Drawing	
15910	DUCTWORK ACCESSORIES	Catalog Information Operation and Maintenance Manuals Shop Drawing	
15920	SOUND ATTENUATORS	Catalog Information	
15932	AIR OUTLETS, INLETS, VAV TERMINALS	Catalog Information Sample	
15940	LABORATORY AIR CONTROL SYSTEMS	Catalog Information Installation Instructions Operation and Maintenance Manuals Shop Drawing	
15970	CONTROLS	Catalog Information Installation Instructions Operation and Maintenance Manuals Schedule or List Shop Drawing	
15980	EFFLUENT MONITORING AND CONTROL STATION	Catalog Information Certification Installation Instructions Operation and Maintenance Manuals Shop Drawing	
15990	TESTING, ADJUSTING, AND BALANCING	Calculations Catalog Information Certification Installation Instructions Operation and Maintenance Manuals Program Report Schedule or List Shop Drawing	

CSI Section	CSI Title	Required Submittals	Date Expected
	DIVISION 16 ELECTRICAL		
16050	GENERAL ELECTRICAL REQUIREMENTS	Catalog Information	
16120	WIRE, 600 VOLTS AND BELOW	Catalog Information	
16130	RACEWAYS, BOXES, AND FITTINGS	Catalog Information	
16140	WIRING DEVICES	Catalog Information	
16150	MOTORS AND MOTOR CONTROLLERS	Catalog Information Operation and Maintenance Manuals Shop Drawing	
16151	ELECTRICALLY OPERATED STEEL DOORS	Catalog Information Operation and Maintenance Manuals Shop Drawing	
16160	CIRCUIT BREAKERS AND PANELBOARDS	Catalog Information Shop Drawing	
16460	GENERAL PURPOSE TRANSFORMERS	Catalog Information	
16461	SPECIAL PURPOSE TRANSFORMERS	Catalog Information	
16490	AUTOMATIC TRANSFER SWITCH	Catalog Information Shop Drawing	
16500	GENERAL PURPOSE LIGHTING	Catalog Information	
16710	FIRE ALARM AND DETECTION SYSTEM (MXL)	Catalog Information Calculations Certification Report Shop Drawing	

CSI Section	CSI Title	Required Submittals	Date Expected
16712	FIRE ALARM AND DETECTION SYSTEM (MXL / IQ)	Catalog Information Calculations Certification Report Shop Drawing	
16715	FIRE CONTROL PANEL	Catalog Information Shop Drawing	
16720	INTRUSION ALARM SYSTEM	Catalog Information	
16740	SECURE COMMUNICATION SYSTEM	Catalog Information Certification Report	
16741	UNSECURE COMMUNICATION SYSTEM	Catalog Information Certification Report	
16742	FIBER OPTIC COMMUNICATION SYSTEM	Catalog Information Certification Report	
16770	PUBLIC ADDRESS SYSTEM	Catalog Information	
16780	CLOSED CIRCUIT TELEVISION	Catalog Information	

PART 2 PRODUCTS - Not Used

PART 3 EXECUTION - Not Used

END OF SECTION

SECTION 01310

PROGRESS SCHEDULES (LARGE PROJECTS)

PART 1 GENERAL

1.01 DESCRIPTION OF WORK

A. This Section includes procedural requirements for the preparation, submittal, and updating of the Contractor's Critical Path Method (CPM) Progress Schedule.

1.02 GENERAL REQUIREMENTS

A. The Contractor shall prepare separate detailed construction schedules covering the work to be performed in the contract. These detailed Construction Schedules shall be developed using the CPM for processing an analysis of the plan.

B. The Contractor shall prepare and maintain a CPM Progress Schedule (CPMPS) as described herein. The CPMPS shall be the Contractor's working schedule and shall be used to plan, organize, coordinate, and execute the work, as well as record and report actual performance, and show how the Contractor plans to complete all work. The CPMPS shall be in the form of an activity oriented CPM precedence network.

C. The CPMPS shall be prepared by the Contractor using the most recent release of a commercially available computer software program that will perform the following analyses:

1. Calculate a CPM schedule

2. Level resources

3. Allocate and track costs

D. The computer software program shall also have the following capabilities:

1. Master project schedule

2. Multiple project schedules

3. Multiple project calendars

4. Computer generated time-scaled network diagrams

5. Computer generated tabular reports

6. Computer generated graphics (e.g. to display resources and costs)

1.03 SUBMITTALS

A. Within thirty (30) days after Notice to Proceed, the Contractor shall submit to the SDR the Initial 90-day CPMPS which shall be the Contractor’s plan for executing the first 90 calendar days of work. This submittal shall include all required information as identified below.

1. A computer generated time-scaled CPM Network Diagram (CPMND)

2. Detailed Bar Chart (DBC)

3. Computer Generated Reports (CGR)

5. Project calendar indicating all non-working periods

6. Activity codes dictionary which shall identify all code values and code titles used.

7. The Contractor shall identify the computer software program (i.e. commercial name and release number) and provide the complete project data for all activities in the CPMPS on electronic media.

B. The Contractor's detailed network schedule shall begin with the date of issuance of the Notice to Proceed and conclude with the contract completion date.

C. The SDR shall review the CPMPS for conformance with the contract documents. If, in the opinion of the SDR, the CPMPS does not conform with the contract documents, the SDR will notify the Contractor of such non-conformance(s), and the Contractor shall satisfactorily revise or provide adequate justification for said comments and re-submit the initial CPMPS to the SDR within five (5) days. Failure by the Contractor to make revisions to the CPMPS that are necessary in order to conform to the requirements of the Contract documents shall be deemed by the SDR as not achieving satisfactory progress, and a maximum of Fifty (50) percent of the amount of the progress payment may be retained. Delays in the acceptance of the initial CPMPS do not relieve the Contractor from any contract requirements. The SDR's review of the project schedule is for compliance with this specification section and other contract requirements. Acceptance by Sandia of the Contractor's CPMPS does not relieve the Contractor of any responsibility whatsoever for the accuracy or feasibility of the completion date, nor does such acceptance expressly or implicitly warrant, acknowledge, or admit the reasonableness of the activities, logic, or durations of the CPMPS.

D. The initial Baseline Schedule, the Contractor’s CPMPS, the plan for executing all work on the contract, will be submitted to the SDR sixty (60) days after Notice to Proceed. After approval of the CPMPS, subsequent updates shall be performed once every calendar month for the duration of the contract. The data date (the date which separates as-built information from as-planned information) for all subsequent updates shall be determined by the SDR. The CPMPS shall be updated to show:

1. Actual activity start dates and completion dates.

2. Activity remaining durations (for activities in progress).

3. Revised logic (if any) and changes in activity durations (if any).

4. Calculate future activity start dates and completion dates.

5. Approved time impact analysis for changes and suspensions.

E. Time impact analysis for changes and suspensions shall apply to all delays depicted in the CPMPS in which a time extension has been granted. For all delays in which an extension of the contract completion date has not been approved by the SCR, the CPMPS shall not show a completion date beyond the contract completion date.

F. As part of the monthly updating process, the Contractor shall prepare a Narrative Progress Report (NPR) describing the project progress during the report period, plans for the forthcoming report period, and potential delays and/or problems and their estimated impact on performance and the substantial and final completion dates. The NPR shall identify and explain any revised logic, changes in activity durations, and delays affecting the project progress as may be indicated in the CPMPS.

G. The Contractor shall submit the following items of required information to the SDR in regard to all updates of the CPMPS no later than (5) calendar days after the data date of each monthly period.

1. A computer generated update of the time-scaled CPM Network Diagram (CPMND)

2. Detailed Bar Chart (DBC)

3. Updated Computer Generated Reports (CGR)

5. Complete updated project data for all activities in the CPMPS on electronic media.

H. Failure by the Contractor to submit the monthly CPMPS shall be deemed by the SCR as not achieving satisfactory progress and a maximum of Fifty (50) percent of the amount of the progress payment may be retained. Delays in the acceptance of the CPMPS updates do not relieve the Contractor from any contract requirements

1.04 CPM PROGRESS SCHEDULE (CPMPS) DETAILS

A. The Contractor shall construct the CPMPS to show the proposed order of work, how the work was accomplished (in the case of the complete work), indicate and identify the cause of restrictions of access (if any), the availability of the work areas, and the availability and use of manpower, materials, and equipment. The Contractor shall utilize the CPMPS in planning, scheduling, coordinating, and performing the work under this contract (including all activities of Sandia, Subcontractors, Equipment Vendors, and Suppliers). The following criteria shall form the basis for the CPM logic:

1. What must be completed before an activity can be started?

2. What can be done concurrently?

3. What must be started immediately following an activity?

4. What economic facility or manpower restrictions must be considered for durations and/or sequencing?

B. The CPMPS shall provide sufficient detail and clarity of form and technique so that the Contractor can plan, schedule, and control the work properly and Sandia can readily monitor and follow the progress for all portions of work. The CPMPS shall comply with the various limits imposed by the scope of work and by the period of performance specified in the contract. The degree of detail shall be to the satisfaction of the SDR. The following factors shall determine the required level of detail:

1. All submittals shall be represented by procurement activities in the CPMPS and shall include separate activities for the preparation of submittal to the SDR, review by the SDR, and fabrication and/or delivery of material and/or equipment.

2. The type of work performed.

3. All purchase, manufacture, and delivery activities for all major materials and equipment for the project as-a-whole.

4. Plans for all subcontract work (e.g. precedence sequence, and duration of Contractor and subcontractor work).

5. Assignment of responsibility (i.e. Contractor or subcontractor) for performing all activities.

6. Access and availability to work areas.

7. Identification of interfaces and dependencies with Sandia and/or preceding, concurrent, and follow-on contractors, including utility interruptions.

8. Identification of significant milestones.

9. Testing, and the submission and approval of test.

10. Planning for beneficial occupancy by Sandia.

C. The activities in the CPMPS shall be the result of definitive manpower and resource planning by the Contractor and its subcontractors under the contractually defined working conditions. Activity time durations shall be in units of whole working days. All activities shall be linked by finish-to-start relationships only. No other relationships shall be permitted without the prior written permission of the SDR. No activity duration shall exceed ten (10) working days, except in the case of the non-construction activities such as procurement of materials, delivery of equipment, and/or concrete curing.

D. The CPMPS shall identify all significant milestones, the date of substantial completion, and the date of final completion. All milestones shall have a duration equal to zero.

E. The activity data shall include activity codes to facilitate selection, sorting, and preparation of the graphics and required reports. Activity codes shall be developed for:

1. Area (i.e. Milestones, Procurement, and Construction).

2. Responsibility (i.e. Contractor or subcontractor responsible for work).

3. Specification (i.e. CSI Masterformat).

F. The following definitions shall apply to the CPMPS:

1. The activity oriented CPM precedence network is all activities in the project, their logical sequence, their interrelationships, and placement of the activities in a timetable.

2. The critical path shall be defined as the sequence of related activities that determine the earliest possible completion date for the network.

3. Critical activities are activities with a total float less than one (1) day.

4. Non critical activities' network relationships and durations do not affect the project's expected completion date. Non critical activities are activities with a total float equal to or greater than one (1) day.

G. The activity data shall include resource information depicting the manpower allocation for each activity. The Contractor may request from the SDR that the resource information requirement (manpower and equipment loading) be deleted as a schedule requirement, by submitting written statements from each of the Contractor’s major subcontractors, on their own company letterhead, that they:
1. Have received a copy of the CPMPS from the Contractor,
2. Understand and agree with the scope and timing of their work, as represented by the activities and durations in the CPMPS, and ,
3. Agree to support the work activities, as depicted in the CPMPS, with sufficient manpower including multiple crews, if necessary, to accomplish their work on this contract.

H. With the exception of the milestones for activities "Start Project" and "Project Completion" no activities shall have open ends (every activity shall have at least one predecessor and one successor).

I. No constraints (i.e. fixed start dates, fixed end dates, mandatory start or finish dates, zero total float or zero free float, or any other) shall be used.

1.05 CPM NETWORK DIAGRAM (CPMND)

A. The CPMND shall be a time-scaled network diagram of all work activities grouped first by activity code(s) and then sorted within such grouping by early start, then total float, then early finish. It will graphically depict the interrelationships between activities. Critical activities (activities with a total float less then 1) shall be indicated by distinct activity bars, all other activity bars shall be indicated by outline with progress indicated by a horizontal line centered within the activity bar. No progress shall be indicated to the right of the data date. The data date shall be indicated by a solid line and all other information on the plot shall be shown with appropriate keys. The CPMND shall be submitted on 750 mm by 1000 mm (30 inch by 42 inch) sheets. Exceptions to the size of the network sheets shall be subject to the approval of the SDR. At a minimum each page of each plot shall contain, in addition to and separate from the activity data, the following information:

1. Project name

2. Sandia National Laboratories Contract No.

3. Contractor's name

4. The title "Network Diagram"

5. A time scale

6. The plot date, data date, project start date, and project completion date

7. The scheduling software system's name

8. The page number of the plot (e.g. Sheet 1 of 2)

B. Each activity shall display the following information:

1. Activity ID

2. Activity Description

3. Activity Remaining Duration

C. Relationship lines shall indicate any start to start relationships, finish to finish relationships, and lag time (if any).

D. The CPMND shall show all work activities in the CPMND, indicate significant milestones, the date of substantial completion, and the date of final completion. All networks shall be plotted to show a continuous flow from left to right with no activity duration from right to left.

1.06DETAILED BAR CHART (DBC)

A. The DBC will be required with all CPMPS submissions (including the initial CPMPS). It shall be a detailed bar chart grouped by activity code and sorted by early start, then total float, then early

finish. Activities without progress (activities to the right of the data date) shall be indicated by a bar outline. Activities with progress, those to the left of the data date, shall be indicated by a bar outline with progress indicated by a horizontal line through the middle of the bar outline. No progress shall be indicated to the right of the data date. Critical activities (activities with a total float less than 1) shall be indicated by a solid bar. The DBC shall be submitted on 200 mm by 300 mm (8.5 inch by 11 inch) white paper. The following activity data shall be represented for each activity on the bar chart:

1. Activity ID
2. Responsibility
3. Activity Description
4. Remaining Duration
5. Total Float
6. Early Start and Early Finish Dates

B. At a minimum, each page of the DBC shall contain, in addition to and separate from the activity date, the following information:

1. Project name
2. Sandia National Laboratories Contract No.
3. Contractor's name
4. The title "Detailed Bar Chart"
5. A time scale
6. The plot date, data date, project start date and project finish date
7. The scheduling software system's name
8. The page number of the sheet (e.g. Sheet 1 of 2)

1.07 COMPUTER GENERATED REPORTS (CGR)

A. The following CGR's shall be required for each submission of the CPMPS (including the initial CPMPS):

1. A tabular report of all activities grouped by Area (i.e. Milestones, Procurement, Construction) and sorted by early start then total float then early finish. This report shall be titled "History Report by Area". For each activity the following information shall be indicated:

a. Activity ID
b. Original Duration
c. Remaining Duration
d. Percent complete
e. Responsibility

f. Activity Description

g. Early Start and Early Finish

h. Late Start and Late Finish

i. Total Float

2. A tabular report of all activities grouped by Responsibility then sorted by Area then early start then total float then early finish. Each activity shall list the number of shifts and crew size of each craft to accomplish the activity.
   1. Subparagraph 1.07 A. 2. shall be deleted, in its entirety, if the Contractor proposes to the SDR the option of providing subcontractor statements supporting the CPMPS, in lieu of, resource information, as described in Section 1.04 G.

3. A tabular report of all procurement activities sorted by Specification Section. For each submittal include activities for: submittal meetings, preparation of shop drawings and submittal to the SDR, review by the SDR, and fabrication and/or delivery of material and/or equipment. All of these activities shall be interfaced with the earliest date that the material or equipment is to be installed on the project.

1.08 MANPOWER HISTOGRAM REPORTS (MHR)

A. The MHR shall be required for each submission of the CPMPS (including the initial CPMPS). The MHR shall be histograms identifying manpower by craft for the Contractor and each subcontractor for each period. The histogram shall be based upon and shall be in agreement with the number of shifts and crew sizes by craft in the CPMPS. The update shall show actual manpower during each period to date, and the required manpower for each period necessary to complete all remaining activities by the early-finish date. An MHR shall be prepared for each Responsibility code (i.e. Contractor or subcontractor).

B. Subparagraph 1.08 A. shall be deleted in its entirety, if the Contractor proposes to the SDR the option of providing subcontractor statements supporting the CPMPS, in lieu of, resource information, as described in Section 1.04 G.

1.09 TIME IMPACT ANALYSIS FOR CHANGES AND SUSPENSIONS

A. When changes or suspensions are ordered by Sandia or asserted by the Contractor that affect the duration of activities, or delays are experienced in the work, the Contractor shall submit to Sandia a written time impact analysis illustrating the influence of each such change or suspension on the contract completion date. Each time impact analysis shall include the following:

1. A fragnet (fragment of the network) demonstrating how the Contractor proposes to incorporate such change, delay or the time impact based on the date the change is given to the Contractor or the date the suspension occurred, and all other relevant information.

2. The status of construction at that point in time.

3. The effect on all affected activities and the contract completion date.

4. The activity actual start dates used in the time impact analysis shall be those included in the most recent accepted update of the CPMPS or as adjusted by written mutual agreement.

B. Activity delay(s) shall not automatically mean that an extension of the contract completion date is warranted or due the Contractor. It is possible that a change or suspension will not affect existing critical activities or cause non critical activities to become critical. A change that affects the

duration of an activity or a suspension may result in only absorbing a part of the available total float that may exist within an activity chain of the network, thereby not causing any effect on the contract completion date.

C. Float is not for the exclusive use or benefit of either Sandia or the Contractor.

D. Time impact analysis shall be submitted as follows:

1. Within thirty (30) calendar days after receipt of a written or oral change order or suspension of work.

2. Within thirty (30) calendar days after the beginning of a delay arising from unforeseeable causes beyond the control and without the fault or negligence of the Contractor.

E. In cases where the Contractor does not submit a time impact analysis within the time stated, it is mutually agreed that the particular change or suspension does not require an extension of the contract completion date.

F. Approval or rejection of each time impact analysis by Sandia shall be made after receipt of each time impact analysis unless subsequent meetings and negotiations are necessary. Upon approval, a copy of the time impact analysis signed by Sandia shall be returned to the Contractor, and incorporated into the CPMPS at the next monthly CPMPS update.

G. Time impact analysis related to an extension of the contract completion date and/or change order work shall be incorporated into and attached to the applicable change order(s).

1.10 RESPONSIBILITY FOR COMPLETION

A. The Contractor shall furnish sufficient forces, offices, facilities, and equipment and shall work such hours including night shift and overtime operations, as necessary to ensure the prosecution of the Work in accordance with the current monthly CPMPS. If, in the opinion of the SDR, the Contractor falls behind in meeting the CPMPS as presented in the current monthly update, the Contractor shall take such steps as may be necessary to improve its progress without additional cost to Sandia. The provisions of this paragraph shall not be construed as prohibiting the Contractor from increasing the hours of work, the number of shifts, overtime operations, and/or the amount of construction plant and equipment, or working on Saturdays, Sundays, and holidays, provided the Contractor gives reasonable notice to the SDR as required.

B. Failure of the Contractor to comply with these requirements shall be the basis for determination by the SCR that the Contractor is not prosecuting the work with the diligence that will ensure its completion within the time specified in the contract. Upon such determination, the SCR may terminate the Contractor's right to proceed with the work, or any separable part thereof, or may take other actions as may be appropriate.

1.11 PERFORMANCE MONITORING

A. The SDR may elect throughout or at any time during the work to record the number of workers and construction equipment working on each activity in the CPMPS in each area of the work and give a copy of this log to the Contractor who shall be responsible of advising the SDR, without additional cost to Sandia, or any error in this work history, in writing, within seven (7) calendar days of receipt of same. This information shall be used by the SDR in his evaluation of the adequacy of the Contractor's performance and on-site manpower staffing, as well as in the evaluation of any Contractor claims.

PART 2 PRODUCTS - Not Used

PART 3 EXECUTION - Not Used

END OF SECTION 01310

SECTION 01311

PROGRESS SCHEDULES (SMALL PROJECTS)

PART 1 GENERAL

1.01 DESCRIPTION OF WORK

A. This Section includes procedural requirements for the preparation, submittal, and updating of the Contractor's Critical Path Method (CPM) Progress Schedule.

1.02 GENERAL REQUIREMENTS

A. The Contractor shall prepare separate detailed construction schedules covering the work to be performed in the contract. These detailed Construction Schedules shall be developed using the CPM for processing an analysis of the work plan.

B. The Contractor shall prepare and maintain a CPM Progress Schedule (CPMPS) as described herein. The CPMPS shall be the Contractor's working schedule and shall be used to plan, organize, coordinate, and execute the work, as well as record and report actual performance, and show how the Contractor plans to complete all work. The CPMPS shall be in the form of an activity-oriented, Precedence Diagram Method (PDM) network.

C. Sandia shall have the right to accept or reject the Contractor's proposed scheduling consultant or Contractor's employee due to a lack of experience or a lack of familiarity with the schedule software. The Contractor shall re-propose qualified alternate schedulers at no additional cost to Sandia within three (3) calendar days thereafter and until such time as Sandia's approval is received. Notice to Proceed will not be issued until the Contractor's scheduler has been approved.

1.03 SUBMITTALS

A. The Contractor shall submit to the SDR a "draft" CPMPS no later than the pre-construction meeting followed by the initial CPMPS submittal based upon Sandia's comments. The "draft" CPMPS shall consist of all activities that are required or anticipated to be complete within the first 30-calendar days of the project. The "draft" CPMPS shall also contain a summarization of the remaining activities formatting the remaining work areas, overall contract duration, milestones, etc. for the remainder of the project. The "draft" CPMPS shall be formatted as the CPMPS shall be, with all calendars, activity codes, all critical procurement submittals, and long-lead time fabrication or procurement items for the project.

B. Within ten (10) days after Notice to Proceed, the Contractor shall submit to the SDR the initial CPMPS which shall be the Contractor's plan for executing all work. This submittal shall include all required information as identified below.

1. A time-scaled, CPM Network Diagram (CPMND)

2. A complete Submittal Schedule, listing all submittals and fabrication/procurement.

3. A Detailed Logic Report listing all activities with their respective Predecessors and Successors and the network logic linking each activity

3. Project calendar report indicating all non-working periods, as well as, any calendars other than 5-day workweek with holidays (i.e., 7-day concrete cure calendar)

4. Activity codes dictionary which shall identify all code values and code titles used. Activity coding, at a minimum, shall include Area/location/phase, Responsibility, and CSI Division.

5. If the Contractor uses computerized schedule software, that software shall be capable of creating a Critical Path Method schedule and shall be capable of calculating the statused network to an established Data Date. The Contractor’s schedule software shall be approved by the SDR prior to its use on the project. The Contractor shall provide the complete project data for all activities in the CPMPS on electronic media. The data shall be copied using the software package's backup utility.

B. The Contractor's detailed network schedule shall begin with the date of issuance of the Notice to Proceed and conclude with the contract completion date (CCD). In the event the Contractor submits a viable, contractually compliant construction schedule that indicates project completion at a date earlier than the CCD, a schedule activity titled “project float” with a duration equal to the difference between the proposed construction completion and the CCD will be added to the schedule. All project float is a project resource for the Contractor and Sandia to use, and is not for the exclusive use of either party.

C. The SDR shall review the CPMPS for conformance with the contract documents. If, in the opinion of the SDR, the CPMPS does not conform to the contract documents, the SDR will notify the Contractor of such non-conformance(s), and the Contractor shall satisfactorily revise or provide adequate justification for said comments and re-submit the initial CPMPS to the SDR within five (5) days. Failure by the Contractor to make revisions to the CPMPS that are necessary in order to conform to the requirements of the Contract documents shall be deemed by the SDR as not achieving satisfactory progress, and a maximum of Fifty (50) percent of the amount of the progress payment may be retained. Delays in the acceptance of the initial CPMPS do not relieve the Contractor from any contract

requirements. The SDR's review of the project schedule is for compliance with this specification section and other contract requirements. Acceptance by Sandia of the Contractor's CPMPS does not relieve the Contractor of any responsibility whatsoever for the accuracy or feasibility of the completion date, nor does such acceptance expressly or implicitly warrant, acknowledge, or admit the reasonableness of the activities, logic, or durations of the CPMPS. Further, failure by the Contractor to include any element of the work in the CPMPS required for the performance of this Contract and / or full completion of the Project shall not excuse the Contractor from completing all work required within the time for completion, not withstanding Sandia's acceptance of the CPMPS.

D. The first update of the CPMPS shall be submitted to the SDR thirty (30) days after Notice to Proceed. Subsequent updates shall be performed once every calendar month for the duration of the contract. The data date (the date which separates as-built information from as-planned information) for all subsequent updates shall be determined by the SDR. The CPMPS shall be updated to show:

    1. Actual activity start dates and completion dates.

    2. Activity remaining durations (for activities in progress).

    3. Revised logic (if any) and changes in activity durations (if any).

    4. Calculate future activity start dates and completion dates.

    5. Approved time impact analysis for changes and suspensions.

E. Time impact analysis for changes and suspensions shall apply to all delays depicted in the CPMPS in which a time extension has been granted. For all delays in which an extension of the contract completion date has not been approved by the SCR, the CPMPS shall not show a completion date beyond the contract completion date.

F. As part of the monthly updating process, the Contractor shall prepare a Narrative Progress Report (NPR) describing the project progress during the report period, any changes to the planned logic during the update period and how that has affected the Critical Path of the project, plans for the forthcoming report period, and potential delays and/or problems and their estimated impact on performance and the substantial and final completion dates. The NPR shall identify and justify any revised logic, changes in activity durations, and delays affecting the project progress as may be indicated in the CPMPS.

G. The Contractor shall submit the following items of required information to the SDR in regard to all updates of the CPMPS no later than (5) calendar days after the data date of each monthly period.

    1. An update of the time-scaled CPM Network Diagram (CPMND)

2. If software is used, complete updated project data for all activities in the CPMPS on electronic media. The data shall be copied using the software package's backup utility.

H. Failure by the Contractor to submit the monthly CPMPS shall be deemed by the SCR as not achieving satisfactory progress and a maximum of Fifty (50) percent of the amount of the progress payment may be retained. Delays in the acceptance of the CPMPS updates do not relieve the Contractor from any contract requirements

1.04 CPM PROGRESS SCHEDULE (CPMPS) DETAILS

A. The Contractor shall construct the CPMPS to show the proposed order of work, how the work was accomplished (in the case of the complete work), indicate and identify the cause of restrictions of access (if any), the availability of the work areas, and the availability and use of manpower, materials, and equipment. The Contractor shall utilize the CPMPS in planning, scheduling, coordinating, and performing the work under this contract (including all activities of Sandia, Subcontractors, Equipment Vendors, and Suppliers). The following criteria shall form the basis for the CPM logic:

1. What must be completed before an activity can be started?

2. What can be done concurrently?

3. What must be started immediately following an activity?

4. What economic facility or manpower restrictions must be considered for durations and/or sequencing?

5. The CPMPS shall be fully capable of Critical Path Analysis, which means that every activity, save the first activity, shall have at least one predecessor activity, and, every activity, save the last activity, shall have at least one successor activity. There shall be no open-ended activities in the network.

B. The CPMPS shall provide sufficient detail and clarity of form and technique so that the Contractor can plan, schedule, and control the work properly and Sandia can readily monitor and follow the progress for all portions of work. The CPMPS shall comply with the various limits imposed by the scope of work and by the period of performance specified in the contract. The degree of detail shall be to the satisfaction of the SDR. The following factors shall determine the required level of detail:

1. All submittals shall be represented by procurement activities in the CPMPS and shall include separate activities for the preparation of submittal to the SDR, review by the SDR, and fabrication and/or delivery of material and/or

equipment. These strings of submittal activities shall be the predecessors to the actual work activities.

2. The type of work to be performed shall be sufficiently described and the subcontractor's involved will be coded. There shall be only one work activity or one subcontractor per schedule activity.

3. All purchase, manufacture, and delivery activities for all major materials and equipment for the project as-a-whole.

4. Plans for all subcontract work (e.g. precedence sequence, and duration of Contractor and subcontractor work).

5. Assignment of responsibility (i.e. Contractor or subcontractor) for performing all activities.

6. Access and availability to work areas.

7. Identification of interfaces and dependencies with Sandia and/or preceding, concurrent, and follow-on contractors, including utility interruptions.

8. Identification of significant milestones

9. Testing, and the submission and approval of test.

10. Planning for beneficial occupancy by Sandia.

C. The activities in the CPMPS shall be the result of definitive manpower and resource planning by the Contractor and its subcontractors under the contractually defined working conditions. Activity time durations shall be in units of whole working days. All activities shall be linked by finish to start (FS) relationships only. No other relationships shall be permitted without the prior written permission of the SDR. No activity duration shall be less than one (1) workday or exceed ten (10) working days, except in the case of the non-construction activities such as procurement of materials, delivery of equipment, and / or concrete curing.

D. The CPMPS shall identify all significant milestones, the start of Punchlist generation, duration for Punchlist correction, the date of substantial completion, and the date of final completion. All milestones shall have duration equal to zero.

E. Include a critical path activity titled "Remaining Inclement Weather Days" in the CPMPS. This activity shall have an initial duration of XXXX (insert normal rain for the area here) working days and shall be the last activity in the schedule prior to the activity titled "Project Completion". All predecessor activities must pass through the Inclement Weather Days activity. The Contractor shall apply to use an Inclement Weather Day when a critical path activity has been delayed because of inclement weather. This application must occur in the same month as the

inclement weather occurrence and must be approved by the SDR prior to inclusion in the CPMPS. Inclement weather delays to non-critical activities will not be considered. If at completion of the project inclement weather days still remain the CCD shall not be adjusted. If at completion additional inclement weather days are required Sandia shall adjust the CCD.

F. The following definitions shall apply to the CPMPS:

1. The activity oriented CPM precedence network is all activities in the project, their logical sequence, their interrelationships, and placement of the activities in a timetable.

2. The critical path shall be defined as the sequence of logically related activities that determine the earliest possible completion date for the network.

3. Critical activities are described as activities with a total float value of zero (0) workdays, or less. Near critical activities are described as those activities with total float values of 5 days or less. No more than 20% of the total number of work activities shown (exclusive of submittal activities) on the schedule shall be critical or near critical.

4. Non critical activities' network relationships and durations do not affect the project's expected completion date. Non critical activities are activities with a total float equal to or greater than one (1) day.

G. With the exception of the milestones for activities "Start Project" and "Project Completion" no activities shall have open-ended logic (every activity shall have at least one predecessor and one successor).

H. No constraints (i.e. fixed start dates, fixed end dates, mandatory start or finish dates, zero total float or zero free float, or any other) shall be used.

1.05 CPM NETWORK DIAGRAM (CPMND)

A. The CPMND shall be a time-scaled network diagram of all activities grouped first by activity code(s) and then sorted within such grouping by early start, then total float. It will graphically depict the interrelationships between activities. Critical activities (activities with a total float equal to or less than zero [0]) shall be indicated by distinct activity bars, all other activity bars shall be indicated by outline with progress indicated by a horizontal line centered within the activity bar. No progress shall be indicated to the right of the data date. The data date shall be indicated by a solid line and all other information on the plot shall be shown with appropriate keys. The CPMND shall be submitted on 750 mm by 1000 mm (30 inch by 42 inch) sheets. Exceptions to the size of the network sheets shall be subject to the approval of the SDR. At a minimum each page of each plot shall contain, in addition to and separate from the activity data, the following information:

1. Project name

2. Sandia National Laboratories Contract No.

3. Contractor's name

4. The title "Network Diagram"

5. A time scale

6. The plot date, data date, project start date, and project completion date

7. The page number of the plot (e.g. Sheet 1 of 2)

B. Each activity shall display the following information:

1. Activity ID

2. Activity Description

3. Activity Remaining Duration

4. Total Float

C. Relationship lines shall indicate all relationships in the network including any start to start relationships, finish to finish relationships, and lag time (if any).

D. The CPMND shall clearly show all activities in the CPMND, indicate significant milestones, the date of substantial completion, and the date of final completion. All networks shall be plotted to show a continuous flow from left to right.

1.06 TIME IMPACT ANALYSIS FOR CHANGES AND SUSPENSIONS

A. When changes or suspensions are ordered by Sandia or asserted by the Contractor that affect the duration of the project, or delays are experienced in the work because of Sandia-caused issues, the Contractor shall submit to Sandia a written time impact analysis illustrating the influence of each such change or suspension on the contract completion date. Each time impact analysis shall include the following:

1. A fragnet (fragment of the network) demonstrating how the Contractor perceives the change or delay impacts the project, and how he proposes to incorporate such change, delay or the time impact into the schedule network, based on the date the change is given to the Contractor or the date the suspension occurred, and all other relevant information.

2. A narrative status of construction at that point in time, including all previously approved changes or time extensions, up to that point in time.

3. The effect on all affected activities and the contract completion date.

4. The activity actual start dates used in the time impact analysis shall be those included in the most recent accepted update of the CPMPS or as adjusted by written mutual agreement.

B. Activity delay(s) shall not automatically mean that an extension of the contract completion date is warranted or due the Contractor. It is possible that a change or suspension will not affect existing critical activities or cause non-critical activities to become critical. A change that affects the duration of an activity or a suspension may result in only absorbing a part of the available total float that may exist within an activity chain of the network, thereby not causing any effect on the contract completion date.

C. Float is not for the exclusive use or benefit of either Sandia or the Contractor.

D. Time impact analysis shall be submitted as follows:

1. Within thirty (30) calendar days after receipt of a written or oral change order or suspension of work.

2. Within thirty (30) calendar days after the beginning of a delay arising from unforeseeable causes beyond the control and without the fault or negligence of the Contractor.

E. In cases where the Contractor does not submit a time impact analysis within the time stated, it is mutually agreed that the particular change or suspension does not affect the contract completion date, and consequently, does not require an extension of the contract completion date.

F. Approval or rejection of each time impact analysis by Sandia shall be made after receipt of each time impact analysis unless subsequent meetings and negotiations are necessary. Upon approval, a copy of the time impact analysis signed by Sandia shall be returned to the Contractor, and incorporated into the CPMPS prior to the next monthly CPMPS update.

G. Time impact analysis related to an extension of the contract completion date and/or change order work shall be incorporated into and attached to the applicable change order(s).

1.07 RESPONSIBILITY FOR COMPLETION

A. The Contractor shall furnish sufficient forces, offices, facilities, and equipment and shall work such hours including night shift and overtime operations, as

necessary to ensure the prosecution of the Work in accordance with the current monthly CPMPS. If, in the opinion of the SDR, the Contractor falls behind in meeting the CPMPS as presented in the current monthly update, the Contractor shall take such steps as may be necessary to improve its progress without additional cost to Sandia. The provisions of this paragraph shall not be construed as prohibiting the Contractor from increasing the hours of work, the number of shifts, overtime operations, and/or the amount of construction plant and equipment, or working on Saturdays, Sundays, and holidays, provided the Contractor gives reasonable notice to the SDR as required.

B. Failure of the Contractor to comply with these requirements shall be the basis for determination by the SCR that the Contractor is not prosecuting the work with the diligence that will ensure its completion within the time specified in the contract. Upon such determination, the SCR may terminate the Contractor's right to proceed with the work, or any separable part thereof, or may take other actions as may be appropriate.

1.08 PERFORMANCE MONITORING

A. The SDR may elect throughout or at any time during the work to record the number of workers and construction equipment working on each activity in the CPMPS in each area of the work and give a copy of this log to the Contractor who shall be responsible for advising the SDR, without additional cost to Sandia, or any error in this work history, in writing, within seven (7) calendar days of receipt of same. This information shall be used by the SDR in his evaluation of the adequacy of the Contractor's performance and on-site manpower staffing, as well as in the evaluation of any Contractor claims.

PART 2 PRODUCTS - Not Used

PART 3 EXECUTION - Not Used

END OF SECTION

SECTION 01400

QUALITY CONTROL

PART 1 GENERAL

1.01 DESCRIPTION

A. This Section describes requirements regarding quality assurance and control of installation, references, field samples, mock-ups, inspections and testing laboratory services, and manufacturers' field services and reports.

1.02 QUALITY ASSURANCE/CONTROL OF INSTALLATION

A. The Contractor shall maintain an adequate inspection system and perform such tests and inspections as will ensure that the work performed under the contract conforms to the contract requirements. The Contractor shall maintain complete inspection records and make them available to Sandia. As a minimum the Contractor shall perform the following:

1. Test, inspect, and monitor quality control over suppliers, manufacturers, products, services, site conditions, and workmanship, to produce Work of specified quality.

2. Comply fully with manufacturers' instructions, including each step in sequence.

3. Should manufacturers' instructions conflict with Contract Documents, request clarification from Sandia Delegated Representative (SDR) before proceeding.

4. Comply with specified standards as a minimum quality for the Work.

5. Perform work by persons qualified to produce workmanship of specified quality.

6. Secure products in place with positive anchorage devices properly sized to withstand stresses, vibration, physical distortion, disfigurement, and seismic Zone 4 accelerations.

B. All work is subject to independent inspection and test by Sandia at all places and at all reasonable times before acceptance to ensure strict compliance with the Contract Documents. Sandia will perform inspections and tests in a manner that will not unnecessarily delay the work. Sandia may charge the Contractor any additional cost of inspection or test when work is not ready at the time specified by the Contractor for inspection or test, or when prior rejection makes reinspection or retest necessary. Sandia's tests or inspections are for the sole benefit of Sandia and do not:

1. Relieve the Contractor of responsibility for providing adequate quality control measures to include test and inspections.

2. Relieve the Contractor of responsibility for damage to or loss of material before acceptance.

3. Constitute or imply acceptance.

4. Affect the guarantee / warranty to Sandia after acceptance of the completed work.

C. The presence or absence of Sandia inspections or tests does not relieve the Contractor from any contract requirement.

D. The Contractor shall promptly furnish, without additional charge, all facilities, labor, and material reasonably needed for performing such safe and convenient inspections and tests as required for verification of compliance with Contract Documents.

E. The Contractor shall, without charge, replace or correct work found not to conform to contract requirements.

F. The Contractor shall promptly segregate and remove rejected material from the premises.

1.03 REFERENCES

A. Abbreviations and acronyms are included throughout the Contract Documents to reference codes and standards which establish qualities, workmanship and materials, and which establish methods for testing and reporting on the pertinent characteristics. It is the Contractor's responsibility to verify the detailed requirements of the specifically referenced codes and standards and to verify that materials and products incorporated into the work conform to or exceed the specified requirements. Materials and products incorporated into the Work which fail to conform with the specified requirements will be considered non-conforming work.

B. See Specification Section 01090 References.

1.04 FIELD SAMPLES

A. Provide field samples at the site as required by individual Specification Sections for review.

B. Acceptable samples shall represent a quality level for the Work.

C. Where field sample is specified in individual Specification Sections to be removed, clear area after field sample has been accepted by SDR.

1.05 INSPECTION AND TESTING LABORATORY SERVICES

A. The SDR will appoint, employ, and pay for services of a firm for verification of compliance with the Contract requirements.

B. The Contractor shall employ, and pay for services of a testing firm to perform inspection and testing required by paragraph 1.02 and to assure compliance with Contract requirements.

C. The firm will perform inspections, tests, and the other services specified in individual Specification Sections.

D. Contractor's Responsibilities:

1. Secure and deliver to the testing laboratories adequate quantities of representative samples of materials proposed for use and which require testing.

2. Provide to the testing laboratories and the SDR the preliminary design mix proposed to be used for concrete, and other materials mixes which require review by the testing and laboratory.

3. Furnish copies of product test reports as required.

4. Furnish incidental labor and facilities.

a. To provide access to Work to be tested.

b. To obtain and handle samples at the project site or at the source of the product to be tested.

c. To facilitate inspections and tests.

d. For storage and curing of test samples.

5. Notify SDR 48 hours in advance of operations to allow for witnessing of Contractor's tests.

1.06 TEST REPORTS

A. The Contractor's testing laboratory shall distribute copies of all reports directly to SDR.

B. The SDR will forward one (1) copy of all Sandia testing reports to Contractor upon written request.

1.07 MULTIPLE TESTS AND INSPECTIONS

A. Certain portions of the Work will be tested and/or inspected at various stages, sometimes off the site, between their inception and final positioning in the completed Work. Nothing in any prior approval or satisfactory test result shall govern if at any subsequent time the Work, or portion thereof, is found not to conform to the Contract Documents.

1.08 ADDITIONAL TESTING AND INSPECTION

A. If initial tests or inspections made by Sandia's testing laboratory reveal that materials do not comply with Contract Documents, or if the SDR has reasonable doubt that materials comply with Contract Documents, additional tests and inspections shall be made.

1. If additional tests and inspections establish that materials comply with Contract Documents, all costs for such tests and inspections shall be paid by Sandia.

2. If additional tests and inspections establish that materials do not comply with Contract Documents, all costs of such tests and inspections shall be deducted from the Contract Sum.

1.09 MANUFACTURERS' FIELD SERVICES AND REPORTS

A. Submit qualifications of manufacturer's observer to SDR thirty (30) days in advance of required observations.

B. When specified in individual Specification Sections, require material or product suppliers or manufacturers to provide qualified staff personnel to observe site conditions, conditions of surfaces and installation, quality of workmanship, start-up of equipment, test, adjust, and balance of equipment as applicable, and to initiate instructions when necessary.

C. Individuals to report observations and site decisions or instructions given to applicators or installers that are supplemental or contrary to manufacturers' written instructions.

PART 2 PRODUCTS - Not Used

PART 3 EXECUTION - Not Used

END OF SECTION

SECTION 01505

CONSTRUCTION WASTE MANAGEMENT

PART 1 GENERAL

1.01 DESCRIPTION

A. Work includes:

1. Waste management plan development and implementation
2. Meeting goals, issues and training for the waste management plan
3. Techniques to minimize waste generation
4. Sorting and separation of waste materials
5. Reuse of salvaged materials on site
6. Salvage of existing materials and items for reuse or resale
7. Recycling of materials which cannot be reused or sold
8. Keeping of receipts and records of salvaged, recycled, or landfilled materials

1.02 WASTE MANAGEMENT GOALS

A. General waste management goals

1. Sandia has established that this contract shall generate the least amount of waste possible.

2. The Contractor shall employ processes which ensure the generation of as little waste as possible and shall avoid the generation of waste due to the following:

a. Over-packaging
b. Error
c. Poor planning, layout
d. Over ordering
e. Breakage
f. Mishandling
g. Contamination
h. Damage from weather

3. Of the inevitable waste that is generated, as many of the waste materials as economically feasible shall be reused, salvaged, or recycled.

4. Waste disposal in landfills shall be minimized to the greatest extent possible.

B. Waste diversion goals

1. A minimum of 70% of the total waste generated from new construction shall be diverted from the landfill.

2. A minimum of 50% of the total waste generated from demolition shall be diverted from the landfill.

3. A minimum of 50% of the total waste generated from remodeling shall be diverted from the landfill.

4. The following waste categories, at a minimum, shall be diverted from landfill:

    a. Green waste such as biodegradable landscaping materials
    b. Soil
    c. Inerts such as concrete, asphalt, and masonry
    d. Clean dimensional wood and palette wood
    e. Engineered wood products such as plywood and particle board
    f. Cardboard, paper, and packaging
    g. Asphalt roofing materials
    h. Metals from banding, ductwork, framing, roofing, siding, flashing, piping, and rebar and products including steel, iron, galvanized sheet steel, stainless steel, aluminum, copper, zinc, lead, brass and bronze
    i. Insulation
    j. Gypsum board
    k. Carpet and pad
    l. Paint
    m. Plastics such as ABS and PVC
    n. Beverage containers

1.03 DEFINITIONS

A. Class III Landfill: A landfill that accepts non-hazardous resources such as household, commercial, and industrial waste resulting form construction, remodeling, repair, and demolition operations. A Class III Landfill must have a solid waste facilities permit from the California Integrated Waste Management Board and is regulated by the Local Enforcement Agency.

B. Clean: Untreated and unpainted; uncontaminated with adhesives, oils, solvents, mastics, and like products.

C. Construction and Demolition Waste: Includes all non-hazardous resources resulting from construction, remodeling, alterations, repair and demolition operations.

D. Dismantle: The process of parting out a building in such a way as to preserve the usefulness of its materials and components.

E. Disposal: Acceptance of solid wastes at a legally operating facility for the purpose of landfilling.

F. Inert Backfill Site: A location, other than inert fill or other disposal facility, to which inert materials are taken for the purpose of filling an excavation, shoring or other soils engineering operation.

G. Inert Fill: A facility that can legally accept inert waste such as asphalt and concrete exclusively for the purpose of disposal.

H. Inert Solids / Inert Waste: Non-liquid solid resources including, but not limited to, soil and concrete, that does not contain hazardous waste or soluble pollutants at concentrations in excess of water-quality objectives established by a regional Water Board and does not contain significant quantities of decomposable solid resources.

I. Mixed Debris: Loads that include commingled recyclable and non-recyclable materials generated at the construction site.

J. Mixed Debris Recycling Facility: A solid resources processing facility that accepts loads of mixed construction and demolition debris for the purpose of recovering re-usable and recyclable materials and disposing non-recyclable materials.

K. Permitted Waste Hauler: A company that holds a valid permit from the Alameda County Department of Public Health to collect and transport solid wastes from individuals or businesses for the purpose of recycling or disposal in Alameda County.

L. Recycling: The process of sorting, cleansing, treating, and reconstituting materials for the purpose of using the altered form in the manufacture of a new product. Recycling does not include burning, incinerating or thermally destroying solid waste. On site recycling includes materials that are sorted and processed on site for use in an altered stated in the work, i.e. concrete crushed for use as a sub-base in paving. Off site recycling includes materials hauled to a location and used in an altered form in the manufacture of a new product.

M. Recycling Facility: An operation that can legally accept materials for the purpose of processing the materials into an altered form for the manufacture of a new product. Depending on the types of materials accepted and operating procedures, a recycling facility may or may not be required to have a Solid Waste Facilities permit from the CIWMB or be regulated by the Local Enforcement Agency.

N. Re-use: Materials that are recovered for use in the same form, on- or off-site.

O. Return: To give back reusable items or unused products to vendors for credit.

P. Salvage: To remove waste materials from the site for resale or re-use by a third party.

Q. Source Separated Materials: Materials that are sorted by type at the site for the purpose of reuse and recycling.

R. Solid Waste: Materials that have been designated as non-recyclable and are discarded for the purposes of disposal.

S. Transfer Station: A facility that can legally accept solid wasted for the purpose of temporarily storing the materials for re-loading onto other trucks and transporting them to a landfill for disposal, or recovering some materials for re-use or recycling.

1.04 REFERENCES

A. The following publications list agencies and businesses in the reuse, recycling and salvage business community:

1. The Alameda County Recycling Guide is available from Alameda County Waste Management Authority and Source Reduction and Recycling Board (510/614-1699).

2. The Business Reuse and Recycling Catalog is available from Calmax California Materials Exchange of the California Integrated Waste Management Board (916/255-2369).

3. The Waste Spec Model Specifications for Construction Waste Reduction, Reuse, and Recycling is available from the Triangle J Council of Governments (919/549-0551).

B. The following salvage, recycling, and disposal resources are listed as suggested sources only:

1. Dirt/clean fill
   a. Pleasanton Transfer Station (925/846-2042)
   b. BFI Waste Services (925/447-0491)
   c. Altamont Landfill (925) 449-6349

2. Green/landscaping waste
   a. Pleasanton Transfer Station (925/846-2042)
   b. BFI Waste Services (925/447-0491)
   c. Altamont Landfill (925) 449-6349

3. Concrete, asphaltic concrete
   a. Specialty Crushing, Oakland (510/986-0964)
   b. Raisch Products, Fremont (510/623-5870)

4. Cardboard, paper, packaging
   a. California Waste Solutions, Oakland (510/832-0111)

b. Community Conservation, Berkeley (510/524-0113)

5. Clean, untreated dimensional wood, palette wood
   a. California Waste Solutions, Oakland (510/832-0111)
   b. Davis Street Smart Recycling, Hayward (510/638-2303)
   c. Dorm Recyclers, Livermore (925/449-9328

6. Usable palettes
   a. Hayward Palette, Hayward (510/538-3127)
   b. Mission Palette Company, San Leandro (510/261-0994)
   c. JJJ Palette, Hayward (510/785-5814)

7. Metals from banding, ductwork, framing, roofing, siding, flashing, piping, and rebar and products including steel, iron, galvanized sheet steel, stainless steel, aluminum, copper, zinc, lead, brass and bronze
   a. Alliance Metals, Emeryville (510/547-2408)
   b. DC Metals, Oakland (510/836-1655)

8. Carpet and pad
   a. Return to manufacturer; donate large remnants to non-profit
   b. Monroe Schneider Associates, San Jose (408/271-1100)

9. Gypsum board
   a. Contact drywall manufacturer to recycle back into new drywall. Drywall scrap must be clean and free from contaminants.
   b. Use as soil amendments. Markets include reuse on site, general agriculture, mushroom growing, forestry and mine reclamation, nurseries, city parks and recreation areas, residential lawns, golf courses, and compost additive.

10. Paint
    a. E-Coat, Kelly Moore, Sacramento (916/921-0165)
    b. Alameda County Household Waste Management Program (800/606-6606)
    c. Safety Clean, Various Locations (510/832-7942)

11. Insulation
    a. Check with manufacturer or installer for take-back programs.

12. Asphalt shingles
    a. Raisch Products, Fremont (510/623-5870)
    b. Community Conservation, Berkeley (510/524-0113)

13. Beverage containers
    a. California Waste Solutions, Oakland (510/832-0111)
    b. Community Conservation, Berkeley (510/524-0113)

1.05 SUBMITTALS

A. Prior to any waste removal, the Contractor shall submit a waste management plan. The plan shall contain the following:

1. Analysis of the estimated job site waste to be generated, including types and quantities.

2. The Contractor shall prepare a list of each material proposed to be salvaged, re-used, or recycled during the course of the contract.

3. The methods of handling materials to be recycled, including on site material separation, storage, and protection and off site mixed waste disposal.

4. A description of the means to be employed in recycling consistent with requirements for acceptance by designated facilities.

5. The name of the landfill(s) where trash will be disposed.

6. A description of the means of transportation of the recyclable materials (whether materials will be site-separated and self-hauled to designated centers or whether mixed materials will be collected by a waste hauler and removed from the site) and appropriate destinations.

7. The Contractor shall designate an on-site individual responsible for training, oversight, and documentation of implementation of the waste management plan.

8. The Contractor shall lay out and label a specific area to facilitate separation of materials for reuse, salvage, recycling, and return. Recycling and waste bin areas are to be kept neat and clean and clearly marked in order to avoid contamination or mixing of materials.

B. The Contractor shall submit monthly waste management progress reports. The reports shall contain the following information:

1. The quantity (in tons) of material landfilled, identity of the landfill, amount of tipping fees, and the total disposal cost. Include legible copies of manifests, weight tickets, receipts, and invoices.

2. The quantity (in tons) of each material recycled, reused, or salvaged, date removed, receiving party, transportation costs, amount of money paid or received, and net total cost or savings by material. Include legible copies of manifests, weight tickets, receipts, and invoices.

1.06 QUALITY ASSURANCE

A. Comply with California State Assembly Bill 939 - Solid Waste.

B. Comply with Executive Order 13101.

PART 2 PRODUCTS – Not Used

PART 3 EXECUTION – Not Used

END OF SECTION

SECTION 01510

TEMPORARY UTILITIES

PART 1 GENERAL

1.01 DESCRIPTION

A. Provide and maintain temporary utilities for construction operations and temporary structures as required; remove on completion of work.

B. Expense of connections of water, electricity, and communications from site sources shall be borne by the Contractor.

C. Sandia does not guarantee amounts available, nor will Sandia be responsible for interruptions in service.

PART 2 PRODUCTS

2.01 GENERAL

A. Materials for temporary utilities may be new or used, shall be adequate in capacity for the required usage, and must not create unsafe conditions or violate requirements of applicable codes and standards.

2.02 TEMPORARY ELECTRICITY

A. Provide all equipment, connections, transformers, etc., and other materials necessary for extending power to the required locations, and remove all connections, equipment, and temporary lines when they are no longer required. The installation shall be made in locations designated by the SDR.

B. Sandia's electrical supply is available to the contractor.

2.03 TEMPORARY HEATING, COOLING, AND VENTILATING

A. Provide temporary heat and ventilation as required to maintain adequate environmental conditions to facilitate progress of work, meet specified minimum conditions for installation of materials, and protect materials and finishes from damage due to temperature or humidity.

B. Provide adequate forced ventilation of enclosed areas for curing of installed materials, to disperse humidity, and to prevent hazardous accumulations of dust, fumes, vapors, and gases.

C. Portable heaters shall be standard units complete with controls. Combustion type heaters, stoves and/or salamanders are not permitted. Secure SDR approval the use and placement of all portable heaters.

D. Pay all costs of portable heater installation, maintenance, operation, and removal.

2.04 TEMPORARY TELEPHONE

A. Provide direct line telephone service at the construction site for the use of personnel and employees. Sandia will furnish dial tone only. Provide all equipment, connections, etc., and other materials necessary for extending telephone service to the required locations. The installation shall be made in locations designated by the SDR.

B. The SDR will receive a monthly printout of all numbers accessed by the Contractor's telephone. Any abuses will be brought to the attention of the Contractor for immediate resolution. Personal abuse of the telephone will not be tolerated, and will result in the termination of all Sandia furnished service. The Contractor will then pay all costs for the installation, maintenance, removal, and service charges for local and long distance calls with the local telephone company.

2.05 TEMPORARY WATER

A. Install branch piping with taps located so that water is available throughout the construction by the use of hoses as required. Protect piping and fittings against freezing.

B. Sandia's water supply is available to the contractor. Any Contractor requiring connection to SNL's potable water system shall do so only through a backflow prevention device furnished and installed by Sandia. The Contractor shall notify the SDR in writing a minimum of forty-eight (48) hours prior to the day water is needed. The Contractor shall not operate any part of the fire hydrant, but instead operate the valve on the backflow prevention device. When water is no longer needed, the Contractor shall immediately inform the SDR so that Sandia personnel can remove the device from service.

2.06 TEMPORARY SANITARY FACILITIES

A. Toilet facilities are not available. Provide and maintain portable chemical toilets at locations designated by SDR.

PART 3 EXECUTION

3.01 GENERAL

A. Comply with applicable requirements specified in Division 15 - Mechanical, and in Division 16 - Electrical.

B. Maintain and operate systems to assure continuous service.

C. Modify and extend systems as work progress requires.

3.02 REMOVAL AND RECONDITIONING

A. Temporary services shall be removed and utilities restored to their original condition at completion.

B. Properly remove from the site and dispose of all debris resulting from removal and reconditioning operations.

C. Leave site in a condition acceptable to SDR.

END OF SECTION

SECTION 01525

CONSTRUCTION AIDS

PART 1 GENERAL

1.01 GENERAL

A. Materials and installations may be new or used, suitable for the intended use, and in conformance with applicable regulatory requirements.

B. Relocate construction aids as required by progress of construction, storage or work requirements, and as practicable to accommodate requirements of Sandia and others that may be employed at the site.

1.02 PLANT AND EQUIPMENT

A. Provide, operate, and maintain a complete plant for fabricating, handling, conveying, installing, and erecting all work and materials required under the contract. Include in the plant all hoists, derricks, and conveyances for transporting workmen and placing materials; debris chutes; all tools, appliances, power equipment, and implements of service that are necessary or customarily incidental to construction of the nature shown or specified. Furnish, arrange, and set-up the entire plant to facilitate proper and timely performance of all work.

B. Maintain plant and equipment in safe and efficient operating condition. The contractor shall be responsible for all damage due to defective plant and equipment and uses made thereof.

1.03 REMOVAL

A. Completely remove construction aids when no longer required.

B. Clean and repair damage caused by installation or use of construction aids.

1. Remove associated foundations and underground installations.

2. Grade affected areas of the site to required elevations and slopes, and clean the area.

C. Restore permanent facilities used for temporary purposes to condition acceptable to the SDR.

PART 2 PRODUCTS - Not Used

PART 3 EXECUTION - Not Used

END OF SECTION

SECTION 01550

ACCESS ROADS AND PARKING AREAS

PART 1 GENERAL

1.01 GENERAL

A. Contractor personnel and other persons assigned for work within the premises of Sandia National Laboratories shall be made aware of and shall comply with site regulations as herein describes.

1.02 ACCESS ROADS

A. Only vehicles with pneumatic tires will be allowed on existing roads.

B. All motorized equipment shall be equipped with mufflers.

C. Certain existing roads within the site, as approved by the SDR, may be used by the contractor during the execution of this work. The use of other roads will not be allowed.

D. Traffic on existing site roads shall be maintained at all times unless otherwise indicated. When obstructions or alterations of existing site roads are required because of construction, detours or other temporary measures shall be complete prior to the starting of the work. The Contractor shall secure SDR approval of temporary measures prior to starting work.

E. Permission for access to locations on the laboratory site will be revoked for any and all persons who violate site regulations.

F. Posted speed limits shall be observed.

G. Signs and notices shall be observed.

H. The Contractor's work shall be conducted to minimize interference with other activities on site.

I. No objects shall be removed from the site except the Contractor's construction materials, or materials designated under this contract to be removed from the site.

1.03 PARKING AREAS

A. Contractor's construction vehicles and equipment will be permitted to park only in the approved construction site, completely off existing site roads, or in the areas designated for parking.

B. Personal vehicles shall be parked within the established parking lots on the site. Personal vehicles will not be allowed in the construction area, except with the permission of the SDR.

C. Overnight parking or storage of personal vehicles will not be allowed.

PART 2 PRODUCTS - Not Used

PART 3 EXECUTION - Not Used

END OF SECTION

SECTION 01560

TEMPORARY CONTROLS

PART 1 GENERAL

1.01 CONSTRUCTION CLEANING

A. The Contractor shall keep all debris clear from work areas, passageways, stairs, and in and around buildings or other structures by continuous policing of all work areas.

B. Comply with regulatory requirements and anti-pollution ordinances during conduct of cleaning and disposal operations.

C. Provide on-site containers for the collection of waste materials, debris, and rubbish.

D. Remove waste materials, debris, and rubbish from the site periodically, and dispose of at legal disposal areas away from the site. This includes all waste materials generated from Sandia furnished, Contractor installed items.

E. The SDR may, at any time during construction, request a general clean-up of site as part of work under this section.

F. Cleaning for specific products or work is specified in the appropriate individual specification sections.

1.02 DUST CONTROL

A. Cooperate with Sandia if dust becomes objectionable. Provide periodic dust control in the form of site watering or whatever other means are necessary to control the problem.

1.03 NOISE CONTROL

A. Cooperate with Sandia if an ongoing construction activity becomes objectionable by its longevity, or by overlapping into an activity started later by Sandia. It is understood and agreed that both parties shall cooperate so that neither will be unduly inconvenienced by this requirement.

B. Comply with requirements specified in the various sections.

1.04 POLLUTION CONTROL

A. Burning of refuse, debris, or other materials will not be permitted on the site.

B. Comply with regulatory requirements and anti-pollution ordinances during the duration of construction and disposal operations.

1.05 STORM WATER POLLUTION PREVENTION

A. Nonhazardous material waste management

1. Material, delivery, storage, and waste collection areas shall be located near the construction site but away from catch basins, gutters, drainage courses, and creeks.

2. Granular material shall be stored at least 30m (10 feet) from catch basins and curb returns, and shall not be allowed to enter the storm drains or creeks. During wet weather the SDR may require that all granular material be covered and surrounded with sand bags.

3. At the end of each working day or as directed by the SDR, the Contractor shall clean and sweep the roadways and on-site paved areas of all materials attributed to or involved with the work. Water shall not be used to flush down streets in lieu of street sweeping.

B. Spill prevention and control

1. Keep a stockpile of spill cleanup materials, such as rags or absorbents, readily accessible on-site.

2. Immediately contain and prevent leaks and spills from entering the storm drains, and properly clean-up and dispose of the waste and clean-up materials. In addition, if the waste is hazardous, the SDR shall be notified immediately.

C. Activity specific requirements

1. All water from dewatering operations shall be routed through a control measure, such as a sediment trap, sediment basin, or Baker tank to remove settleable solids prior to discharge to the storm drain system.

2. During saw cutting, all catch basins shall be covered or barricaded using control measures, such as filter fabric, straw bales, sand bags, or fine gravel dams to keep slurry out of the storm drain system. If slurry accidentally enters a catch basin, it shall be removed immediately.

3. Concrete trucks and equipment shall not be washed out into gutters, storm drains, or creeks. Washout shall occur off-site or on-site in an area where the water will flow onto dirt or into a temporary pit in a dirt area.

1.06 SURFACE WATER CONTROL

A. Do not permit surface or subsurface water to accumulate in or about the premises and vicinity thereof. Should such conditions be encountered or develop, control the water, and suitably dispose of it by means of temporary pumps, piping, drainage lines, troughs, ditches, dams, and other methods, as approved.

B. Maintain the existing building in a weathertight condition throughout construction. Repair damage caused by construction operations. Take precautions necessary to protect the building and occupants during the construction period.

PART 2 PRODUCTS - Not Used

PART 3 EXECUTION - Not Used

END OF SECTION

SECTION 01570

TRAFFIC REGULATION

PART 1 GENERAL

1.01 SUBMITTALS

A. Appropriate drawings and sketches shall be submitted for review and approval when construction work requires pedestrian, bicycle, or vehicle channelization in other than the lanes or paths normally used. The intended path or lane shall be clearly defined and all proposed signage and pavement markings shall be clearly delineated. Consideration shall be given to service access by SNL for routine activities as well as emergency response.

1.02 FLAGGERS

A. Properly equipped flaggers shall be used where it is necessary to change traffic controls frequently. Examples might include the stopping of through traffic for equipment movement and alternate directional use of a single traffic lane.

B. Flaggers shall wear orange vests, jackets, or shirts at all times. Reflectorized clothing shall be required during hours of darkness.

C. Proper signage bearing the message "STOP" and / or "SLOW" shall be utilized for hand signaling to control traffic through work zones.

1.03 SIGNAGE AND PAVEMENT MARKINGS

A. Adequate warning delineation and traffic channelization shall be accomplished by means of proper pavement marking, signing, barricading, and the use of other devices which are effective under varying conditions of light and weather.

B. Appropriate temporary pavement markings shall be used when construction work requires pedestrian, bicycle, or vehicle channelization in other than the lanes or paths normally used. The intended path or lane shall be clearly defined and allow adequate width for vehicle and / or pedestrian clearance. Pavement markings no longer applicable shall be removed immediately and new pavement markings placed before opening the affected area to traffic.

C. Temporary pavement markings shall be used in combination with appropriate warning signs and channelizing devices. All signs shall conform to the State of California "Traffic Sign Specifications" for size, character, dimensions, and letter stroke width. All signs intended for use during hours of darkness shall be reflectorized. Signs shall be placed in positions where they will convey their message most effectively and so that motorists and bicyclists have adequate time to respond.

1.04 BARRICADES, BEACONS, AND WARNING LIGHTS

A. Barricades shall be used to separate pedestrians, bicyclists, and motorists from situations created by construction activities on or near the road or pathway. Flashing beacons or warning lights shall be used near points of potential conflict and at open trenches in roads and pathways at night. Each beacon or warning light shall consist of a lighting unit, standard, battery power source, and base.

1.05 TRENCH CROSSINGS

A. Appropriate deck plates shall be used in areas where pedestrian, bicycle, or vehicle traffic must pass over an open trench. Deck plates must be designed to support anticipated loading. Hand rails and toe boards shall be provided on all pedestrian deck plates. Slip resistant materials shall be used in all wet locations.

PART 2 PRODUCTS - Not Used

PART 3 EXECUTION - Not Used

END OF SECTION

SECTION 01590

FIELD OFFICES AND SHEDS

PART 1 GENERAL

1.01 GENERAL REQUIREMENTS

A. Provide and maintain temporary structures for field offices and construction sheds in compliance with applicable requirements of federal, state, and local codes and regulations during entire construction period.

B. Install temporary structures in locations approved by the SDR.

1.02 USE OF EXISTING FACILITIES

A. No existing facilities at the site will be available for use as field offices or storage.

PART 2 PRODUCTS

2.01 GENERAL

A. Materials, equipment, and furnishings: New or used, and adequate for purposes intended.

B. Construction:

1. Structurally sound
2. Weathertight
3. Painted in color approved by SDR
4. Sturdy doors with provisions for locking
5. Temperature transmission resistance compatible with occupancy and storage requirements
6. Neat appearance maintained throughout duration of work.

C. Portable or mobile buildings fulfilling the specified requirements may be used.

2.02 CONTRACTOR'S FIELD OFFICE

A. Provide.

2.03 STORAGE SHEDS

A. Minimum Requirements:

1. Number and sizes: Adequate for storage and handling requirements of the various trades.

2. Ventilation: Comply with specified and code requirements for products stored.

3. Heating: Adequate to maintain temperatures specified in the respective sections for the products stored.

4. Lighting: As required to facilitate product handling and safety requirements.

PART 3 EXECUTION

3.01 INSTALLATION

A. Construct temporary structures on stable foundations when providing connections for utility services.

1. Adequately anchor portable or mobile buildings to the ground when used.

2. Provide steps and landings at entrance doors.

3.02 MAINTENANCE AND CLEANING

A. Provide periodic maintenance and cleaning for temporary structures, furnishings, equipment, and services.

3.03 REMOVAL

A. Remove temporary structures from the site as soon as, in the opinion of the SDR, the progress of the work will permit. Removal shall include foundations, steps, landings, utility services, and contents of the temporary structures.

B. Grade and restore the portions of the site occupied by the temporary structures to a condition acceptable to the SDR.

C. Properly remove from the site and dispose of all debris resulting from removal and reconditioning operations.

PART 2 PRODUCTS - Not Used

PART 3 EXECUTION - Not Used

END OF SECTION

SECTION 01610

DELIVERY, STORAGE, AND HANDLING

PART 1 GENERAL

1.01 GENERAL

A. All material and equipment incorporated in the work shall be:

1. New, unless otherwise specified.

2. In condition acceptable to SDR.

3. Suitable for intended use.

B. No asbestos containing materials (ACM) are permitted.

1.02 SHIPPING

A. Material Delivery: Do not have any material or equipment delivered to Sandia Shipping and Receiving. All handling and receiving of material or equipment shall be provided for by the Contractor. Postal service through Sandia is not available.

B. Deliver manufactured products in their original, unbroken containers or bundles, clearly labeled with manufacturer's name, brand, grade seal, or model number.

1.03 UNLOADING AND ACCEPTANCE

A. Handle materials and equipment in a manner to avoid damage to products and their finishes.

B. Promptly remove damaged or defective products from the site and replace.

1.04 PROTECTION

A. Store manufactured products in accordance with manufacturer's instructions, and with seals and labels intact and legible.

1. Store products subject to damage by the elements in weathertight enclosures.

2. Maintain temperature and humidity within the ranges specified by the manufacturer.

B. Exterior Storage:

1. Store fabricated products above ground, on blocking or skids, to prevent soiling and staining.

2. Cover products which are subject to deterioration with impervious sheet coverings. Provide adequate ventilation to avoid condensation.

3. Store aggregates where gradation and other required characteristics can be maintained.

C. Arrange storage to facilitate inspection.

D. Periodically inspect stored products to assure that products are maintained under specified conditions, and free from deterioration.

E. Protection After Installation:

1. Protect materials and equipment from all damage.

2. Provide substantial coverings as necessary to protect installed products from damage.

3. Maintain temperature and humidity conditions for interior equipment and finish products in accordance with manufacturer's instructions.

1.05 NRTL LABEL

A. Materials and equipment, for which a Nationally Recognized Testing Laboratory standard have been established and their label service is available, shall bear the appropriate NRTL Label.

1.06 MANUFACTURER'S TRADE MARKS AND NAMES

A. The SDR reserves the right to review and request the removal or redesign, of manufacturer's trade marks and names on items of materials and equipment which will be exposed to view in the completed work. Such removal or redesign shall be at no increase in contract sum. A decision on the necessity to remove or redesign may be obtained from the SDR in writing prior to bidding.

PART 2 PRODUCTS - Not Used

PART 3 EXECUTION - Not Used

END OF SECTION

SECTION 01720

PROJECT RECORD DOCUMENTS

PART 1 GENERAL

1.01 MAINTENANCE OF DOCUMENTS AND SAMPLES

A. Store documents and samples in field office apart from documents used for construction.

B. Maintain documents in a clean, dry, legible condition.

C. Do not use record documents for construction.

D. Furnish record documents to Sandia at completion of contract.

1.02 RECORD DOCUMENTS

A. Record Drawings:

1. Record the following kinds of information on the record drawings:

a. Locations of work buried under or outside the buildings, such as plumbing, electrical lines, and conduits.

b. Provide actual number of each electrical circuit.

c. Locations of all items, not necessarily concealed inside the building, whose general locations are changed by the contractor from those shown on the contract drawings.

d. Locations of all items, not necessarily concealed, which the Contractor elects to vary, with SDR's review and acceptance, from the contract documents.

e. The following requirements for record drawings are in addition to those previously specified.

1) They shall be done carefully and neatly in a form accepted in advance by the SDR.

2) Kept up to date during the entire progress of the work, and made available to the SDR at any time.

3) Provide additional drawings as necessary for clarification.

4) Record all deviations from the sizes, locations, and other features of installations shown in the contract documents.

5) Establish locations of underground work, points of connection with existing utilities, changes in direction, valves, manholes, catch basins, capped stubouts, invert elevations, etc.

6) Give sufficient information to locate work concealed in the building with reasonable ease and accuracy. In some instances, this may be by dimension, in others, it may be in relation to the spaces in the building near which it was installed.

7) Provide record drawings, made from final shop drawings which have been updated to show actual conditions, for work specified in the individual sections.

B. Specifications and Addenda:

1. Mark each section to record any changes made by field order, change order, or addenda.

PART 2 PRODUCTS - Not Used

PART 3 EXECUTION - Not Used

END OF SECTION

SECTION 01860

SAFETY PROVISIONS

PART 1 GENERAL

1.01 INTRODUCTION

A. Scope

1. This document provides a framework for a construction safety program for use on Sandia construction projects. Large portions of this specification have been taken from DOE Standard DOE-STD-1149-2002 Safety and Health Program for DOE Construction Projects. The intent of this document is to provide an effective methodology for managing the hazards inherent to construction work in a systematic manner that can be easily integrated with the management of other technical aspects of a construction project.

B. CODES AND STANDARDS

1. 29 CFR 1926, Safety and Health Regulations for Construction, latest edition.
2. 29 CFR Part 1910, General Industry Occupational Safety and Health Standards which are applicable to construction work, latest edition.

C. DEFINITIONS

1. CONTRACT DOCUMENTS are the documents by which construction services to be procured are described and solicited. These include the request for proposal or the invitation for bids, the plans and specifications and other standards referenced therein, work orders, or other requisitions for construction services.
2. CONTRACTOR is the first-tiered contractor or subcontractor who has been awarded the contract to perform all construction activities described in the contract documents.
3. CONSTRUCTION is any combination of erection, installation, assembly, demolition, or fabrication activities involved to create a new facility or to alter, add to, rehabilitate, dismantle, or remove an existing facility. It also includes the alteration and repair (including dredging, excavating, and painting) of buildings, structures, or other real property, as well as any construction, demolition, and excavation activities conducted as part of environmental restoration or remediation efforts.
4. CONSTRUCTION PROJECT is the full scope of activities required on the construction worksite to fulfill the requirements of the contract documents. In cases where multiple solicitations are used to perform construction on or of a facility, those services described within each solicitation shall be deemed a project for the purposes of application of the construction safety and health program requirements of this Document.
5. CONSTRUCTION WORKSITE is the area within the geographic limits necessary to perform the work described in the contract documents. It includes the facility being constructed or renovated along with all necessary staging and storage areas as well as adjacent areas subject to

project hazards. It does not include offsite offices of design personnel or the facilities of fabricators or suppliers.

6. PROJECT PHASE is a separately definable portion of a project involving a type of work presenting hazards not experienced in previous project operations or an operation performed by a different subcontractor.
7. SAFETY OFFICER is the individual designated by the Contractor as responsible for the performance of all aspects of the work described in the contract documents including implementation of the project safety and health program. He shall have full authority to act for the Contractor.
8. SANDIA (SNL) is the organization with the primary landlord responsibility at a DOE sponsored facility.
9. SANDIA DELEGATED REPRESENTATIVE (SDR) is the individual or firm responsible for the supervision and administration of a construction project to ensure the Contractor's compliance with requirements set forth in the contract documents.

1.02 PROJECT SAFETY AND HEATH PROGRAM

A. General

1. The Contractor shall establish and maintain a program to protect the safety and health of all persons on the construction worksite to include his or her employees, employees of other contractors or subcontractors, visitors, and the public. This program also shall protect against damage to property, materials, supplies, and equipment and prevent unnecessary work interruptions. The objective of the program is to ensure compliance by the Contractor and all worksite subcontractors with the safety and health standards prescribed in the contract documents.

B. Project Safety and Health Plan

1. Prior to commencing any work on the project worksite, the Contractor shall prepare and submit for approval a written project safety and health plan. This plan is the Contractor’s proposal for implementing the safety and health requirements prescribed by the contract documents. The plan shall address minimally the following:
   a. Statement of Contractor safety and health policy.
   b. Statement by each subcontractor attesting that they have reviewed and shall follow the project safety and health plan submitted by the general contractor.
   c. Employee rights and responsibilities.
   d. Identity of safety officer and other Contractor personnel to be assigned safety and health duties on the worksite, their qualifications, and their respective duties. The plan shall also identify any other individual(s) the Contractor proposes to authorize to act during periods of safety officer absence.
   e. A list of all anticipated project phases, as well as annotation of those project phases for which the contract documents require that protective measures be designed, inspected, implemented or approved by a Professional Engineer or other qualified person.
   f. Proposed format and methodology for performing hazard analyses.

g. Plans for worksite safety and health orientation and continued safety training.
h. Disciplinary policy for safety and health related infractions.
i. Alcohol and drug abuse policy.
j. SNL safety and health policies or procedures applicable to the project (e.g., facility work permits, hot work permits, fire system impairments).
k. Procedures for interfacing with other site contractors on safety and health issues.
l. Project hazard communications program (refer to 29 CFR 1926.59).
m. General construction hazards and the applicable policies and procedures for addressing these hazards.
n. Use and maintenance of personal protective equipment generally required on the project worksite (e.g., hard hats, eyewear, protective footwear).
o. First aid and medical facilities.
p. Fire prevention and control.
q. Emergency response procedures to include local warning and evacuation systems.
r. Procedures for reporting or correcting unsafe conditions or practices.
s. Procedures for reporting and investigating accidents and incidents.
t. Project safety and health recordkeeping procedures.
u. Maintenance of and employee access to exposure monitoring data and medical records.

2. The approved project safety and health plan shall be maintained on the worksite and shall be made available upon request to all personnel working on the project site, the SDR, and other SNL personnel with assigned oversight responsibilities.

C. Safety Officer Responsibilities, Qualifications, and Training

1. Responsibilities:
   a. The safety officer is responsible for implementation of the project safety and health plan. The superintendent or another duly designated Contractor representative must be present on the worksite during the performance of any project work activities.
   b. In no case shall the requirement for or the presence of dedicated project safety and health personnel relieve the safety officer of full and complete responsibility for compliance with all project safety and health requirements.
   c. The safety officer is responsible for ensuring that all project subcontractors comply with project safety and health requirements. The safety officer is further responsible for coordinating with project subcontractors and other site contractors those safety and health plan elements addressing worksite hazards to which employees of other contractors may be exposed.
2. The minimum qualifications for a safety officer are knowledge of:
   a. Principles and practices of industry and construction site safety.
   b. Safety and occupational health laws and procedures.

c. Methods of assessing safety hazards and controls.
d. Hazardous material storage and transfer procedures.
e. Emergency preparedness activities.

3. The minimum training requirements for a safety officer shall include:
   a. A two year degree with course work in occupational health and safety, industrial hygiene, environmental engineering, or related field. Documented experience in safety inspection and coordination may be substituted on a year for year basis in lieu of formal coursework.
   b. Two years documented experience in safety inspection and coordination.

D. Hazard Analysis

1. Prior to commencement of work on any project phase, the Contractor shall prepare and have approved by the SDR a detailed analysis of all hazards associated with that phase (see sample format below). The number of phases for which a hazard analysis is required is not limited to those identified in the project safety and health plan as the actual number of phases may differ from the anticipated number due to variations in subcontractors, construction operations, or job sequence. For each project phase, the hazard analysis shall:
   a. Identify the specific hazards and the use or presence of any hazardous chemicals, associated with each activity to be performed as well as the actual corrective measures planned to control these hazards. Guidance for the performance of such hazard analyses is provided in an OSHA pamphlet entitled "Job Hazard Analysis" available online at: http://www.osha-slc.gov/Publications/Osha3071.pdf. In planning controls to address identified hazards, due consideration shall be given to the hierarchy of controls (i.e., engineering controls, administrative controls and personal protective equipment).
   b. Include drawings and / or other documentation for all protective measures for which the contract documents or applicable safety and health standards prescribe preparation by a Professional Engineer or other qualified person.
   c. List all equipment to be used for which applicable standards require periodic or preoperational inspections.
   d. Identify specific inspections as required by the contract documents or applicable safety and health standards and provide the qualifications of the competent person(s) who will conduct these inspections.
   e. Identify any prerequisite employee training or certifications needed to accomplish the activities listed for each project phase.
   f. In order to assist the Contractor in preparing the Hazard Analysis, SNL will provide Preliminary Hazard Assessment (PHA) data. This data will include: The PHA Check List (see below). This check list identifies the hazards that SNL has initially identified to be associated with this project. It should be noted that no attempt has been made to address every hazard that could be encountered during execution of this work. A list of pre-existing hazards known to exist in or around

the designated work area is also provided. These hazards are identified in Document 00230 Existing Conditions.

HAZARD ANALYSIS

Job Location: _____

Project Phase: _____

Analyzed By / Date: _____

Approved By / Date: _____

Activity:

Identify each principal activity for the project phase in sequence.

Potential Safety/Health Hazard:

List the hazards associated with each principal activity.

Planned Controls:

List specific controls for each potential hazard such as engineering controls, administrative controls, or personal protective equipment.

Equipment Inspection:

List [illegible] requiring [illegible] or periodic inspections.

Jobsite Inspection Requirements:

List specific jobsite inspection requirements to include identity and qualifications of competent person(s) or other qualified personnel performing inspections.

Training Requirements:

List worker-training requirements, including hazard communication.

Sample Form

PRELIMINARY HAZARD ASSESSMENT

Project Number		Date Issued	
Project Leader		Expiration Date	
Contract Number		Issued To (Initials)	
Job Supervisor		Issued By (Initials)	

This Project has been evaluated for environmental, safety, and health concerns or conditions which pre-exist on the jobsite, and which may impact the Contractor or subcontractor methods and procedures in the performance of Work. This evaluation does not list every potential hazard possible or is intended to be all-inclusive. It is the responsibility of the Contractor to identify all hazards in the work place prior to performance of Work. This assessment does not include those hazards that may be introduced by the Contractor or his subcontractors during the execution of the Work necessary to meet the Contract "Statement of Work." Hazards introduced by the Contractor in the performance of Work are required to be evaluated and mitigated by the Contractor in accordance with 29 CFR 1926, 29 CFR 1910, and the Contract Specifications Section 01860 Safety Provisions.

The following pre-existing conditions have been identified on the Project site.

Hazard	Not Evaluated **	**Yes ***	**No**	**Hazard**	Not Evaluated **	**Yes ***	**No**
1. Flammable liqu	☐	☐	☐	1 Confined Space	☐	☐	☐
2. Lead paint				1 H tage E			
3. Chemicals	☐			1 P d Gas			
4. Radiation				1 F Impairm ts			
5. Buried Utilities				1 R Materia			
6. Explosives				1 Env mental C ditions			
7. Asbestos Containing Materials - permit / work release attached?	☐	☐	☐	16. Facilities Work Permit Requirements	☐	☐	☐
8. Traffic restrictions / lane closures required?	☐	☐	☐	17. Activity Hazard Assessment forms attached.	☐	☐	☐
9. Safety	☐	☐	☐	**Building/Location**			

Sample Form

* If checked **yes**, please see the following corresponding restrictions or conditions for each hazard identified. DO NOT PROCEED without full knowledge and understanding of these conditions. If a hazard has been checked, and no corresponding description or identified paperwork/permit is attached, please contact the Sandia Delegated Representative (SDR) immediately.

** This item was not identified as a concern at the time of the hazard evaluation. If this or any other hazard is encountered during the performance of Work, contact the Construction Safety Program Representative (CSPR) or the SDR for specific requirements prior to performing any work that may impact the condition or concern.

The Contractor is responsible for ensuring that the identified hazards have been acknowledged in the Contractors' Jobsite Specific Safety Plan, which includes a method for working within and around the identified hazards.

PRELIMINARY HAZARD ASSESSMENT

Description of conditions or restrictions for each pre-existing hazard found at the jobsite:

Hazard Number	Description

Sample Form

E. Employee Training

1. The Contractor shall ensure that each employee entering the worksite has, through experience, training and, where required, certification, the skills and knowledge necessary to safely perform his or her assigned tasks. This training shall include an initial worksite safety and health orientation, phase specific training addressing foreseen hazards and control measures

associated with each phase of work upon which the employee is active, and continued safety and health "tool box" training. All training shall be conducted by qualified personnel and shall be communicated in a language understood by all employees.

F. Worksite Safety and Health Orientation
   1. Each employee shall receive an initial safety and health orientation prior to performing any work on the project worksite. The orientation shall include a detailed review of the contents of the approved project safety and health plan, including provisions for subsequent employee access to the plan.
   2. Contractors with a continual onsite presence or with multiple projects utilizing the same work force may provide the orientation prior to commencing work on the employee's first onsite project and on a periodic basis, as determined locally, thereafter. Orientation on items that vary from project to project shall be provided for each project.

G. Phase Specific Training
   1. Prior to commencing any phase of work, the Contractor shall review the approved hazard analysis for that phase with all employees on the affected work crew and provide training to ensure that all employees understand the potential hazards and the required protective measures. A copy of each phase's hazard analysis shall be annotated with the name, signature, and date of attendance of all workers who have attended this training. The Contractor shall provide advance notice to the SDR for all phase specific training sessions. Further phase specific training sessions shall be conducted for new employees on the work crew, under changing site conditions, or at the discretion of the SDR to reinforce project safety and health requirements.

H. Toolbox Safety and Health Training
   1. The Contractor shall conduct informal tool box safety and health training sessions at least weekly for all employees on the worksite. Depending on the size and nature of the project, this may be accomplished in single or multiple sessions and may address different topics for different work crews. The Contractor shall notify the SDR of the time and location of all scheduled tool box training sessions. Minutes of all tool box training sessions shall be prepared by the Contractor and annotated with the date, time, and names of all employees in attendance.

I. Training Records
   1. The Contractor shall ensure that records of all required training are maintained on site and made available, upon request, to the SDR, and other personnel with assigned oversight responsibilities.

J. Inspections and Hazard Abatement
   1. During periods of active construction, the Contractor shall ensure that competent persons conduct frequent and regular inspections of their respective areas of the worksite to identify and correct hazards and instances of noncompliance with project safety and health requirements and approved hazard analyses. The superintendent and other project

supervisory staff shall also include safety as part of their routine review of project operations.

2. The Contractor shall take immediate corrective action to eliminate or control all identified hazards. Newly identified hazards shall be appropriately addressed in revised hazard analyses. In cases where immediate corrective action is not possible or responsibility for abatement falls outside the scope of the project, the Contractor shall:
   a. Immediately ensure all affected employees are aware of the hazard and its location and removed from harm's way. This may require partial or complete suspension of construction operations and installation of control measures to prevent unauthorized access.
   b. Immediately post appropriate warning signs at the location of the hazard describing the nature of the hazard.
   c. Verbally notify the SDR immediately of the location and description of the hazard. This notification shall be followed up in writing.
   d. Implement further interim control measures, as needed, to protect employees from the identified hazards and secure SDR approval for continued use of the employed measures.
3. All identified hazards and their respective corrective actions shall be documented in project inspection reports. The responsibility and timetable for abating hazards that were not immediately corrected shall also be similarly documented. Follow-up inspections to ensure subsequent abatement of such hazards should be likewise documented.

K. Reporting, Recordkeeping, and Accident Investigation

1. In order to facilitate the accurate tracking of SNL/CA Days Away Cases, the following information shall be submitted to the SDR by the Contractor on a monthly basis. A Days Away Case is defined as a recordable incident by a Sandia employee or contractor that results in at least one (1) full workday away from work. A log by calendar day shall be submitted stating the total number of workers on site per day. It is not necessary to differentiate partial from full days or provide detail by employer, trade, etc.
2. The Safety Officer shall notify the SDR and shall obtain and submit a completed Report of Occupational Injury / Illness form (see sample form below), on all accidents which result in an injury or work related illness to any person. The notification shall describe in writing the circumstances of the accident and the corrective action taken. The notification and submittal shall be within twenty four (24) hours of any such injury.

SF 2050P (7-96)
Supersedes (7-95) issue

Date/Time Run 10/26/95 11:03:26

Sandia National Laboratories

REPORT OF OCCUPATIONAL INJURY/ILLNESS

(Based on the OSHA definitions and reqirements which may or may not be consistent with various state compensation laws)

NOTICE OF ACCIDENT

(Pursant to Chapter 52, NMSA 1978 section 52-1-29)

FOR MEDICAL USE ONLY

Date received in Medical _____ **Case No.** _____ **Date received in Safety** _____

Name(Last, First, MI)	Org.	Mail Stop	Sex	Date of Birth	Age	Social Security Number

Date of Incident	Incident Day of Week	Time of Day	Location of Incident (Bldg/Room)	Incident was:	Service Date

Job Category (Secretary, electrician, painter, scientist, mechanical tech, etc)	Job experience [(yr(s)mo(s)]	Witness(es)

Briefly describe the activity you were performing and how the incident occured ____

Employee Signature _____ Work Phone _____ Date _____

CONTRACTOR INFORMATION - PLEASE COMPLETE THE FOLLOWI[illegible] FOR[illegible]N

Company Name (Contract Use Only)	Phone	Name of SNL Supervis[illegible]	[illegible]tor	Or[illegible]	P[illegible]

Workdays Lost	Workdays Restricted	[illegible]

INVESTIGATION - MANAGER (Foreman, Inspector, etc.)

A. Was place of Incident or exposure on Sandia's premises Yes ☐ No ☐

B. Was employee sent home due to incident? Yes ☐ No ☐

C. What was the employee doing when incident occured? Be Specific
(Was employee using tools, equipment, handling material?, Name them., What was employee doing with them?)
____

D. How did the incident occur? What was the cause? Describe the event in full detail.
Name any objects or substances involved and tell how they were involved.
____

E. What has been done to correct conditions causing the incident?
____

F. What remains to be done to correct such conditions? By what date?

Manager's Name (print or type) _____

Manager's Signature _____ **Org** _____ **M.S.** _____

Date _____ **Phone** _____

MEDICAL INFORMATION

Diagnosis	Treatment	Disposition
☐ Deferred	☐ First Aid Only	☐ Outside Referral
☐ Fracture	☐ Debridement	☐ Physical Therapy
☐ Loss of Consciousness	☐ Sutures	☐ Sent Home
☐ FB Removal (Medical)	☐ Prescription Medication	☐ Accommodations
☐ FB Rem[illegible]t Aid)	☐ OTC Medication	☐ None of the Above
	☐ Steri-strip/Butterfly	
	[illegible]Support)	
	[illegible]lin[illegible]mmobilize)	

Examined by [illegible]rsician[illegible]/PA[illegible]es [illegible] No ☐ Attending medical professional name: _____

SAFETY INFORMATION

DOE Case Recordable Yes ☐ No ☐ Were corrective actions discussed with Manager Yes ☐ No ☐

Investigative Comments/Corrective Action See Attachement ☐ Not Work Related ☐

Safety and Health Representative _____ Org _____ M.S. _____ Phone _____ Date _____

Sample Form

1.03 SAFETY ASSURANCE

A. Signage

1. The Contractor shall have the following signage posted at the job site at all times:
   a. Contractor supplied poster with contractor personnel and telephone numbers.
   b. Contractor supplied Equal Employment Opportunity (EEO) poster.
   c. Posted location of Material Safety Data Sheets (MSDS).
   d. SNL supplied poster with project personnel and telephone numbers.
   e. SNL supplied poster with emergency telephone numbers.
   f. SNL supplied DOE complaint form DOE F5480.4.
   g. SNL supplied copy of Report of Occupational Occurrences (Injury/Illness).
   h. SNL supplied 911 poster.
   i. Other job specific postings as required.

B. Emergencies

1. For all life-threatening injuries or illnesses or to summon the fire department, the Contractor shall immediately call for assistance by dialing 911 on a SNL telephone or 925-294-2222 from an outside line or cellular phone.
2. During performance of this contract any time an emergency situation arises which involves fire protection, security, and the like in and around the construction worksite, all activity shall cease immediately. The Safety Officer shall ensure that the following actions are promptly taken: stop all work, evacuate the area, account for all persons on site, and remain at the area of assembly (i.e. don't leave) until directed otherwise. Activities shall not recommence until authorized to do so by SNL personnel.

C. Permits

1. Upon receipt of forty-eight (48) hour written notice from the Contractor, the SDR or his assigned delegate will contact the Safety Officer to review specific aspects and details of the proposed permit required work activity. Once compliance with appropriate codes, programs, and standards has been ascertained, the SDR's assigned delegate will issue a Sandia California Facility Work Permit (see sample below) authorizing the work to occur. This permit will be issued just prior to the start of the activity and be valid through the expiration date specified on the permit. This permit shall be clearly posted at the work site and made readily available for review by SNL personnel.
2. Any permit required activity which occurs without proper issuance of a facility work permit will be stopped immediately and non-compliance documentation issued in the name of the Safety Officer. Work will not recommence until resolution has been reached to the satisfaction of the SDR. All costs and liabilities incurred as a result of this work stoppage shall be borne solely by the Contractor. The following activities require issuance of a facility work permit:
   a. Confined Space Entry: Issuance of a permit applies to all confined or enclosed spaces including but not necessarily limited to storage tanks,

process vessels, bins, boilers, ventilation or exhaust ducts, sewers, underground utility vaults, manholes, handholes, tunnels, pipelines, and open top spaces more than 4 feet in depth, such as pits, tubs, vaults and vessels, and in some instances excavations and trenches. The following requirements shall be met prior to issuance of a permit:

(1) The location of the confined space and the work to be performed during entry shall be clearly described.

b. Powder Actuated Tool Use: Only powder actuated piston driven tools are authorized for use at SNL. The following requirements shall be met prior to issuance of a permit:
   (1) Sandia security shall be informed.
   (2) The location in which the tool will be used shall be clearly described.

c. Hidden Hazard Penetration: Any penetration greater than 2 inches into the earth or concrete wall or floor shall require issuance of a permit. The following requirements shall be met prior to issuance of a permit:
   (1) All drawings and documentation shall be reviewed for the possible existence of concealed utilities near the work area.
   (2) An electronic survey shall be performed to more accurately locate documented utilities as well as attempt to determine if there are any undocumented utilities near the work area.
   (3) The location of the penetration and the work to be performed shall be clearly described.

d. Excavation: A "competent person" is required as per 29 CFR 1926.650 for all excavation and trenching operations. The following requirements shall be met prior to issuance of a permit:
   (1) The location of the excavation and the work to be performed shall be clearly described.
   (2) The requirements set forth under the heading Hidden Hazard Penetration shall be fully met.

e. Mobile Crane Use: Issuance of a permit applies to all mechanized lifting equipment including but not necessarily limited to cranes, personnel hoists, and forklifts. The following requirements shall be met prior to issuance of a permit:
   (1) An annual inspection certificate shall be presented, if applicable.
   (2) The operator's daily log shall be presented, if applicable.
   (3) The location where the equipment will be used shall be clearly described.

f. Elevated Work: Any elevated work which requires fall protection shall require issuance of a permit. The following requirements shall be met prior to issuance of a permit:
   (1) Authorization for roof access shall be obtained for those areas requiring special approval.
   (2) The location of the elevated work and the work to be performed shall be clearly described.

g. Utility System Interruption: Any work on the site electrical, water, sanitary sewer, storm sewer, or gas systems shall require issuance of a permit. All such system interruptions shall be made in accordance with requirements found elsewhere in Division 1 for scheduling and execution of the work. The following requirements shall be met prior to issuance of a permit:
   (1) All affected facilities and systems shall be identified.
   (2) The location and type of utility system to be interrupted shall be clearly described.

h. Hot Work: Any cutting, welding, soldering, grinding, open flame, spark producing appliance, kettles, and roofing solvents shall be considered hot work and require issuance of a hot work permit. The following requirements shall be met prior to issuance of a permit:
   (1) Remove transient combustibles from the work area, cover in-situ combustibles with resistive blankets, or relocate work to a safe location.
   (2) Certain operations, such as work on a combustible roof, in areas of combustible vegetation, shall require a dedicated fire watch during and thirty (30) minutes after performing the hot work. The fire watch shall have evidence of formal training on the use of portable fire extinguishers at least annually.
   (3) Hot work is not allowed concurrent with suppression system impairments in occupied buildings.
   (4) A minimum of a 2A-10B-C fire extinguisher shall be provided and immediately available within the work area.
   (5) The location, type of spark producing appliance, and work to be performed shall be clearly described.

i. Fire System Impairment: Any work on the fire sprinkler, underground fire water, fire alarm, fire detection, or automatic fire suppression systems shall constitute impairment to the system and require issuance of an impairment permit. Impairments on fire sprinkler systems in non-occupied buildings shall be completed during non-working hours or limited to the duration of a normal working day. Impairments to the fire sprinkler system in occupied buildings shall be completed during non-working hours or limited to four (4) hours duration. The following requirements shall be met prior to issuance of a permit:
   (1) Work shall be planned and materials staged so that suppression or detection system downtime is minimized.
   (2) Following completion of the work and reactivation of the system, a re-acceptance test shall be performed by the SDR or his assigned delegate.
   (3) The location, type of system to be impaired, and work to be performed shall be clearly described.

SANDIA CALIFORNIA FACILITY WORK PERMIT

Project Number: _____ **Date Issued:** _____
Project Leader: _____ **Expiration Date:** _____
Contract Number: _____ **Issued To (Initial):** _____
Job Supervisor: _____ **Issued By (Initial):** _____

Activity	Requirements
Confined Space Entry	☐ Approved Confined Space Program ☐ Approved task specific Hazard Analysis ☐ Location and work to be performed:_____ ☐ IH Approval (In-house work only)
[illegible]der Actuated Tool Use	☐ Evidenc[illegible]f training reviewe[illegible] ☐ Security [illegible]formed ☐ Locatio[illegible]f use:_____
[illegible]idden H[illegible] Per[illegible]	☐ [illegible]ving [illegible]evi[illegible] for conc[illegible]ed utiliti[illegible] ☐ [illegible]or[illegible] su[illegible]rformed ☐ [illegible]a[illegible]p[illegible]fic [illegible]aza[illegible] Analys[illegible]ple[illegible] ☐ Lo[illegible]o[illegible]nd [illegible]pe[illegible] penetra[illegible]
[illegible]	☐ Ap[illegible]v[illegible]ta[illegible]c Haza[illegible] Analy[illegible] ☐ [illegible]o[illegible]nd [illegible]pe of excava[illegible]:_____
El[illegible] Vo[illegible]	☐ [illegible]ov[illegible] Fa[illegible]tion Pr[illegible]am ☐ [illegible]ov[illegible] task[illegible]fic Haza[illegible] Analysi[illegible] ☐ Roof access authorized ☐ Location and work to be performed:_____
Utility System Interruption	☐ Approved Lockout / Tagout Program ☐ Approved task specific Hazard Analysis ☐ Affected facilities and users informed ☐ Location and work to be performed:_____
Mechanized Equipment Use	Issued upon initial entry to site
Hot Work	Contact Fire Protection at x1557 or x2934
Fire System Impairment	Contact Fire Protection at x1557 or x2934
Additional Notes	_____ _____ _____ _____ _____ _____ _____ _____ _____ _____ _____

Sample Form

PART 2 PRODUCTS – Not Used

PART 3 EXECUTION – Not Used

END OF SECTION

SECTION 02051

SITE DEMOLITION

PART 1 - GENERAL

1.1 RELATED DOCUMENTS

A. Drawings and general provisions of Contract, including General and Supplementary Conditions and Division-1 Specification sections, apply to work of this section.

1.2 DESCRIPTION

A. This section covers work required for demolition of existing structures and other improvements not to be used for the development of the project.

1.3 PROTECTION

A. Protection of Existing Improvements

1. Protection shall be provided to prevent damage to existing improvements indicated to remain in place on Sandia property.

2. Damaged improvements shall be restored to their original condition, as acceptable to the Sandia Delegated Representative.

3. Land areas outside the limits of demolition performed under this contract shall be preserved in their present condition. The Contractor shall confine his demolition activities to areas defined for work on the drawings.

4. Existing trees to remain shall be protected as indicated on the drawings.

B. Protection of Existing Utilities

1. The Contractor shall verify all existing utility locations either shown or not shown on the drawings.

2. The Contractor shall immediately notify the Sandia Delegated Representative of any damages to existing utilities.

3. Repairs to damaged utilities shall be made in accordance with the requirements of the Sandia Delegated Representative at no extra cost to Sandia.

4. The Contractor shall coordinate with the Sandia Delegated Representative for shutoff of or connection to active utilities. Existing utility services shall not be interrupted except as authorized in writing by the Sandia Delegated Representative.

C. Protection of Work Site: Barricades or other type protectors shall be provided to prevent unauthorized personnel from entering work sites.

1.4 JOB CONDITIONS

A. Traffic:

1. Demolition operations and the removal of debris shall be conducted in a manner that will ensure minimum interference with roads, driveways, walks and other adjacent occupied or used facilities.

2. Roads, driveways, walks and other adjacent occupied or used facilities shall not be closed or obstructed without written permission from the Sandia Delegated Representative.

B. The use of explosives shall not be permitted.

PART 2 - PRODUCTS

Not Applicable.

PART 3 - EXECUTION

3.1 PAVEMENT DEMOLITION

A. Pavement demolition shall include removal of portland cement concrete surfacing, asphaltic concrete surfacing, curbs, gutters, sidewalks, and base courses.

B. The extent of pavement demolition is shown on the drawings.

C. The joint between pavement that will remain and pavement that is being removed shall be sawed. Sawing shall be true-to-line. The depth of sawing shall be such that when removing the pavement, underbreakage or shattering of the adjacent area will not occur.

D. Pavement being removed shall be broken into pieces weighing not more than 150 pounds.

3.2 FENCE AND POLE REMOVAL

A. Fences and utility poles to be removed are indicated on the drawings.

B. Fence Removal:

1. Care shall be taken in removal of material to prevent damage to posts, cable, fence or fittings.

2. Cable or fence shall be coiled and tied tightly before storing. Fittings shall be tied together in bundles or boxed.

C. Utility Pole Removal:

1. Poles shall be removed with as little damage as possible.

2. Poles shall be removed wholly. Anchor bolts, protruding conduit and similar appurtenances may be cut flush with the ground.

3.3 UNDERGROUND UTILITY DEMOLITION

A. Underground utility demolition shall include removal of water lines, sanitary sewers, septic leach fields, storm drains, and appurtenances.

B. Underground utilities to be demolished are shown on the drawings.

C. Underground utilities to be demolished shall not be removed from service until necessary new utilities have been installed and tested. This requirement shall be waived under the following conditions, subject to the approval of the Sandia Delegated Representative:

1. Temporary interruptions required for connection of new utilities to existing lines shall be of short duration and be at a time when occupied buildings or facilities are not affected by the interruption.

2. Where temporary service or temporary utility lines have been provided by Sandia or the Contractor, the existing utility may be demolished.

3. Where adequate storm water drainage has been provided by temporary ditches or pipes, the existing storm drain may be demolished.

D. Excavations for removal of underground utilities shall be backfilled in accordance with the following:

1. Excavations under areas to receive pavements, driveways, curbs, gutters, steps, equipment slabs, building slabs-on-grade, and similar construction shall

be backfilled with aggregate subbase backfill in accordance with Paragraphs 3.3.B. and 3.4.A of Section 02221: Trench Excavation and Backfill.

2. Excavation under grassed or landscaped areas shall be backfilled with select soil backfill in accordance with Paragraphs 3.3.B. and 3.4.A. of Section 02221: Trench Excavation and Backfill.

E. Bertonite Concrete well seals shall be cut off 3' below grade or 3' below deepest excavation and filled with concrete.

3.4 ADJUSTING EXISTING MANHOLES AND STRUCTURES

A. Existing manholes and structures that do not conform to the new finished grade in either surfaced or unsurfaced areas shall be adjusted to the new finished grade unless shown otherwise on the drawings.

B. Manholes, structures, frames, covers and other appurtenances shall be of a type suitable for the intended use.

3.5 DISPOSAL OF DEMOLISHED MATERIALS

A. Demolished material shall become the property of the Contractor and shall be disposed of by the Contractor off Sandia National Laboratories property at a legally approved dump site.

3.6 CLEANUP

A. On completion of demolition and after removal of all debris, site shall be left in clean condition satisfactory to the Sandia Delegated Representative.

B. Cleanup shall include off-site disposal of all items and materials not required to be salvaged as well as all debris and rubbish resulting from demolition operations.

END OF SECTION

SECTION 02082

ASBESTOS ABATEMENT

PART 1 GENERAL

1.01 DESCRIPTION OF WORK

A. Furnish all labor, materials, services, and equipment required to complete abatement of asbestos-containing materials (ACM) in accordance with the approved work plan. The work specified shall consist of performing all operations, including repairing, removing, encapsulating, or enclosing any materials, structures, or systems necessary to complete the scope of work.

1.02 REFERENCES

A. Title 29, Code of Federal Regulations, Sections 1910, 1915, 1917, 1918, 1926 and 1928, of the Occupational Safety and Health Administration (OSHA), U.S. Department of Labor. Pay particular attention to specific Sections 1910.1001, 1910.134, and 1926.1101.

B. Title 40, Code of Federal Regulations, Part 61, Subparts A and M, National Emission Standards for Hazardous Air Pollutants (NESHAP), U.S. Environmental Protection Agency (EPA).

C. Title 40, Code of Federal Regulations, Parts 763, Asbestos Hazard Emergency Response Act (AHERA).

D. Title 49, Code of Federal Regulations, Parts 171-177, Department of Transportation (DOT), regarding the transport of hazardous materials.

E. Title 30, Code of Federal Regulations, Part II Respirators, National Institute for Occupational Safety and Health (NIOSH).

F. All applicable State and Local regulations and codes, including but not limited to, Title 8 California Code of Regulations Sections 340.1, 341.6 -15, 1529, 1531, 5208; Regulation 11, Rule 2 (Bay Area Air Quality Management District); California Labor Code Division 5, Sections 6501-6511, 9000 et. seq.; California Business and Professions Code, Section 7058 et. seq.; and California Health and Safety Code, Section 25000 et. seq.

G. American Society for Testing and Materials (ASTM) E84 Test Method for Surface Burning Characteristics of Building Materials. E136B Standard Practices for Visual Inspection of Asbestos Abatement Projects.

H. NIOSH Method 7400, "Fibers".

I. Facilities Asbestos Management Program, Manual of Practice.

J. National Fire Protection Association (NFPA) 30 Flammable and Combustible Liquids Code 701 Standard Methods of Fire Tests for Flame-Resistant Textiles and Films.

K. Military Standard Number 282.

L. Army Instruction Manual 136-300-175A.

M. American National Standards Institute (ANSI) Z41 Safety Toe Footwear Z9.2 Fundamentals Governing the Design and Operation of Local Exhaust Systems

N. Underwriters Laboratories (UL) 586 High-Efficiency Particulate Air Filter Units 790Standard Rain Test.

1.03 DEFINITIONS

A. Abatement: Procedures to control fiber release from asbestos-containing building materials. Includes securing the work area, removing the material, cleaning the area, and disposing of the material.

B. Access Doorway: A device to allow ingress and egress from one room to another while permitting minimal air movement between the rooms, typically constructed by placing two or three overlapping sheets of plastic over an existing or temporarily framed doorway, securing each along the top of the doorway, securing the vertical edge of one sheet along one vertical side of the doorway, and securing the vertical edge of the other sheet along the opposite vertical side of the doorway; or by using a rigid gasketed door and HEPA filter vents.

C. Aggressive Sampling: A process which is designed to dislodge and re-suspend any settled fibers and to keep them airborne during the sampling period.

D. Air Filtration Equipment: A portable local filtration system equipped with HEPA filtration and capable of maintaining a constant, low velocity flow to filter and trap contamination out of the air within the work area and then circulate or exhaust the filtered air to uncontaminated areas. This equipment is also used to establish a reduced pressure within the work area.

E. Air Monitoring: The process of measuring the fiber or asbestos structure content of a specific volume of air in a stated period of time.

F. Air Lock: A system for permitting ingress and egress with minimum air movement between a contaminated area and an uncontaminated area, consisting of dual or triple curtained doorways or rigid gasketed doors separated by a dead air space of 900 mm (3 feet).

G. Amended Water: Water to which a surfactant has been added in accordance with manufacturer's instructions.

H. Authorized Person or Visitor: SDR, or their authorized representative, or any representative of a regulatory or other agency having jurisdiction over the project.

I. Clean Room: An uncontaminated area or room which is a part of the worker decontamination facility with provisions for storage of worker's street clothes and protective equipment.

J. Critical Barrier: A barrier comprised of one or more layers of plastic sealed over all openings into a work area or any other similarly placed physical barrier sufficient to prevent airborne asbestos in a work area from migrating to an adjacent area. A critical barrier shall be comprised of at least two layers of 0.15 mm (6 mil) fire retardant plastic sheeting.

K. Curtained Doorway: A device to allow ingress and egress from one room to another while permitting minimal air movement between the rooms, typically constructed by placing overlapping sheets of plastic over an existing or temporarily framed doorway, securing each along the top of the doorway, securing the vertical edge of one sheet along one vertical side of the doorway, and securing the vertical edge of the other sheet along the opposite vertical side of the doorway.

L. Decontamination Facility: A series of connected rooms, with access doorways between any two adjacent rooms, for the decontamination of workers and of materials and equipment. A decontamination facility always contains at least one airlock.

M. Equipment Decontamination Facility: A system of rooms designed for controlled transfer of materials and equipment, typically consisting of a washroom and a holding area.

N. Equipment Room: A contaminated area or room which is part of the worker decontamination facility with provisions for storage of contaminated clothing and equipment.

O. Fixed Object: An unit of equipment or furniture in the work area which cannot be removed from the work area.

P. Glovebag Technique: A method with limited applications for removing small amounts of friable ACM from HVAC ducts, short piping runs, valves, joints, elbows, and other surfaces typically in a non-contained work area. The glovebag assembly is a manufactured or fabricated device consisting of a glovebag (constructed of 0.15 mm (6 mil) minimum transparent plastic which shall be seamless on the bottom) two inward projecting long sleeve rubber gloves, one inward projecting water wand sleeve, an internal tool pouch, and an attached, labeled receptacle for asbestos waste. The glovebag is constructed and installed in

such a manner that it surrounds the object or area to be decontaminated and contains all asbestos fibers released during the removal process. All workers who are permitted to use the glovebag technique must be highly trained, experienced, and skilled in this method.

Q. HEPA Filter: A high efficiency particulate air (HEPA) filter capable of trapping and retaining 99.97 percent of particles (asbestos fibers) 0.3 µm (1.18 E-5 inches) mass median aerodynamic equivalent diameter.

R. HEPA Vacuum Equipment: Vacuuming equipment with a HEPA filter system.

S. Holding Area: A chamber in the equipment decontamination facility located between the washroom and an uncontaminated area. The holding area comprises an air lock.

T. Independent Analytical Testing Laboratory: Registered corporation, partnership, or other form of business with no financial ties to the Contractor and retained by project specific contract to perform air analytical services. This testing laboratory is furnished by the Contractor.

U. Industrial Hygienist: Person with the authority to conduct and oversee air sampling activities and assure compliance with regulations.

V. Log Book: A notebook or other book containing essential project data and daily project information and a daily project diary. This book is kept on the project site at all times.

W. Mini-Enclosure: A method with limited applications for removing small amounts of asbestos containing material.

X. Movable Object: An unit of equipment or furniture in the work area which can be removed from the work area.

Y. Regulated Area: Area established by employer to demarcate areas where asbestos work is conducted, any adjoining area where debris and waste from such work may accumulate, and a work area within which airborne concentrations of asbestos exceed or there is a reasonable possibility they may exceed the permissible exposure limit. The regulated area must meet, as a minimum, the requirements of 1926.1101 (e) (6).

Z. Shower Room: A room between the clean room and the equipment room in the worker decontamination unit with hot and cold or warm running water and suitably arranged for complete showering during decontamination. The shower room comprises an air lock between contaminated and clean areas.

AA.BB Surfactant: A chemical wetting agent added to water to improve penetration. The additive shall be mixed in accordance with manufacturer's directions.

BB. Visual Inspection: Walk-through inspection of work area to detect incomplete work, damage, or inadequate clean up of a work area.

CC. Washroom: A room between the work area and the holding area in the equipment decontamination area. The washroom comprises an air lock.

DD. Wet Cleaning: The process of eliminating asbestos-contamination from building surfaces and objects by using cloths, mops, or other cleaning tools which have been dampened with water, and by afterwards disposing of these cleaning tools as asbestos-contaminated waste.

EE. Work Area: Designated rooms, spaces, or areas of the project in which asbestos abatement actions are to be undertaken or which may become contaminated as a result of such abatement actions. A contained work area is a work area or mini-enclosure which has been sealed, plasticized, and equipped with a decontamination enclosure system. A non-contained work area is an isolated or controlled-access work area which has not been plasticized nor equipped with a decontamination enclosure system.

FF. Work Plan: The Contractor's written representation of the means and methods of ACM abatement.

GG. Worker Decontamination Facility: That portion of a decontamination facility designed for controlled passage of workers, and other personnel and authorized visitors, typically consisting of a clean room, a shower room, and an equipment room.

1.04 SUBMITTALS

A. All submittals shall be in accordance with Section 01300 Descriptive Submittals.

B. Submit the following prior to the start of work:

1. The work plan shall include the following information:

a. Calculations to determine number of HEPA filtered fan units required to achieve the number of air changes specified. Incorporate allowances for dirty filters, supply and exhaust ductwork, and other conditions that may reduce capacity. Submit manufacturer's product data for each type of HEPA filtered fan unit.

b. Description of testing methods for correct air flow and pressure differentials.

c. Methods used to supply adequate electrical power to HEPA filtered fan units. Include methods to be used in case of power failure.

d. Description of work practices to minimize airborne fibers.

e. Description of work practices to provide a safe work environment for personnel, including potential hazard recognition, lockout tagout procedures, and compliance with applicable sections of 29 CFR 1910 and 1926.

f. Abatement techniques to be utilized. Describe methods anticipated for each material type including specific removal techniques.

g. Sketch(es) detailing locations of emergency exit doors, construction barriers, number and location of HEPA filtered air units, abatement phases, routing of exhaust duct for HEPA filtered air units, and locations of decontamination unit and waste load out. Include locations of smoke detectors and fire extinguishers.

h. Sketch(es) detailing decontamination unit construction. Include construction, floor plan, dimensions, materials, sizes, thicknesses, plumbing, and electrical outlets.

i. Fire sprinkler protection plan. Indicate water flow control measures and spillage clean-up measures to be followed.

j. Staffing plan, including worker qualifications and certifications.

k. Emergency evacuation plan. Include locations of emergency exit doors, evacuation route(s) and location of predetermined fire or emergency gathering site.

l. Approved notifications to required federal, state, regional, and local enforcement agencies.

m. Provide name, address, telephone number, fax number, and business hours of the independent analytical testing laboratory to be used by the Contractor.

2. A copy of all current, applicable State of California required registrations and certifications in regards to the performance of asbestos related work.

3. Names and social security numbers for all abatement workers. Include a copy of certificates indicating that each abatement worker has received and passed the AHERA "Asbestos Abatement Worker" training.

4. Name(s) and social security number(s) for each person who will supervise work under this section. Include a copy of certificates indicating that each person has received and passed the AHERA "Asbestos Contractor / Supervisor" training. Verification that each person has been trained in the provisions of NESHAP and are OSHA competent persons. Submit a local telephone number at which these person(s) can be contacted on a twenty-four hour basis during this work.

5. Medical examination report, conducted within the past twelve months, as part of compliance with OSHA medical surveillance requirements for each worker who will enter the work area. The report shall include, at a minimum:

    a. Physician's statement identifying whether the worker has any detected medical conditions placing the worker at an increased risk from exposure to asbestos. Include any recommended limitations placed on the worker. Include a statement signed by the person assuring that the worker has been informed by the physician of the results of the medical examination and of any medical conditions that may result from asbestos exposure.

    b. Statement that the employee is able to wear and use the type of respiratory protection proposed for the project and that the employee is able to work safely in an environment capable of producing heat stress.

6. Copy of Contractor's Respiratory Protection Program in accordance with 29 CFR 1910.134 and 29 CFR 1926.1101. Include fit test records for each individual proposed for this work in accordance with 29 CFR 1910.134 and 29 CFR 1926.1101.

7. Worker decontamination procedures.

8. Equipment decontamination and maintenance procedures.

9. Manufacturer's data sheets and serial numbers for all HEPA filtered air units and for all HEPA vacuums to be used.

10. Description of all personal protective equipment and respiratory equipment to be used. Include a copy of the NIOSH / MSHA labels for each respirator and cartridge used.

11. The emergency plan shall include:

    a. Elevated airborne fiber control.

b. Breach of containment.

c. Loss of electric power.

d. Loss of minimum differential air pressure.

e. First aid and procedures to follow in the event of personal injury, including precautions to prevent heat stress.

f. Fire evacuation procedures.

g. Salvage operations for fire or sprinkler activation.

12. Air monitoring program shall include the name(s) and social security number(s) of the industrial hygienist(s). Include a copy of certificate for NIOSH 582 "Sampling and Evaluation Airborne Asbestos Dust" training course and State of California OSHA Asbestos Certification. Include a copy of certificates of training for the AHERA "Asbestos Contractor / Supervisor" course. (If the foreman conducts the compliance air monitoring, he or she shall be trained in proper pump calibration and sample collection in accordance to NIOSH and OSHA. Submit compliance air monitoring pump calibration and sample collection written procedures.)

a. Submit air monitoring results daily.

b. Submit the job site log book at project close-out.

1.05 QUALITY ASSURANCE

A. Worker Qualifications and Certifications:

1. Foremen and workers shall be experienced with asbestos removal and related work, safety procedures, and equipment.

2. All personnel shall have received EPA or state approved training and certifications to satisfy all federal, state, and local requirements. Contractor and individual personnel certifications and training shall be current.

a. Foreman shall have received the AHERA Asbestos Abatement Contractor and Supervisor training course and satisfactorily passed an examination following the training program. Only EPA or state approved training courses shall be accepted. Foreman shall be trained in the provisions of NESHAP and OSHA.

b. Workers include apprentice and laborer job categories. Workers shall have received no less than the AHERA Asbestos Abatement Worker

training course conducted by an approved EPA or state training provider and satisfactorily passed an examination following the training program.

B. Provide mandatory daily personnel air monitoring in accordance with applicable OSHA regulations, codes and standards.

1. Provide an Independent Analytical Testing Laboratory. The Laboratory shall be enrolled and demonstrate proficiency in the last two rounds of the American Industrial Hygiene Association (AIHA) Proficiency Analytical Testing (PAT) program.

2. Provide an independent industrial hygienist (IH) to conduct personal compliance monitoring required by OSHA. The IH shall have technical knowledge to perform and sampling in asbestos abatement environment. If a foreman conducts the compliance air monitoring, he or she shall be trained in proper pump calibration and sample collection.

3. The independent analytical testing laboratory shall immediately analyze all air samples collected for the Contractor on or off site, but in no case longer than 24 hours after commencement of sample collection.

4. Mandatory daily personnel air monitoring may be waived upon approval of the SDR in the event that Type "C" respiratory protection is used.

5. Mandatory daily personnel air monitoring may be waived upon approval of the SDR in the event that historical air monitoring data has been collected on similar projects conducted at SNL, or a negative exposure assessment has been provided to and approved by the SDR.

C. Use this table to determine air sampling limits in work area. This table identifies maximum allowable fiber concentrations permitted during abatement work. If these levels are exceeded, stop work until the source of the elevated fiber level is identified and corrected.

Allowable Fiber Concentrations

Type of Sample	Maximum Allowable Fiber Concentrations
* STEL	1.0 f/cc
* Personal - 8 hr. TWA	0.10 f/cc
* Personal - 8 hr. TWA Glovebag Worker (outside containment)	0.01 f/cc
Inside Work Area	0.10 f/cc
Inside Glovebag Work Area (or other work outside a containment)	0.01 f/cc
Outside Work Area	0.01 f/cc

Clean Room	0.01 f/cc
Dirty Room	0.01 f/cc
HEPA Filter Exhaust	0.01 f/cc

* Contractor's Responsibility

1.06 RECORD KEEPING

A. Maintain records throughout the construction period and make them available to the SDR upon request.

B. Job site records shall include the following:

1. Daily logs, including construction site log-in, containment log-in, foreman's daily inspection report, and description of daily work activities, including a marked floor plan indicating area where work was performed.

2. Air sample reports and chain of custody forms, including maps showing air sample locations.

3. Accident report summary.

4. Pressure differential records.

5. Emergency plans.

6. Copies of worker, superintendent, foreman, industrial hygienist, and technician certifications and notarized worker release forms.

7. Fit test and medical records for personnel on site.

8. Loss of reduced air pressure reports.

9. If applicable, equipment operation and maintenance logs, material logs, laboratory and testing results for compressed air, and Grade "D" air quality tests.

10. Waste inventory records.

11. Personal air sample reports, laboratory results, and backup data.

12. Respiratory protection program.

13. Authorized personnel list.

14. Worker decontamination procedures and equipment.

15. NESHAP documentation.

PART 2 PRODUCTS

2.01 MATERIALS

A. Provide air and watertight containers resistant to damage and rupture. Leak-tight containers shall be suitable to receive and retain any asbestos containing or contaminated materials until disposal. Disposal bags shall be a minimum of 0.15 mm (6 mil) thickness polyethylene. All containers shall have warning labels in accordance with OSHA, NESHAP, and DOT regulations.

B. Provide fire retardant polyethylene sheet plastic 0.10 mm (4 mil) or 0.15 mm (6 mil) thickness. Polyethylene shall be frosted or clear, sized to minimize the number of joints, and shall comply to both small and large scale tests of NFPA 701.

C. Provide translucent sheets, nylon reinforced or woven polyethylene, laminated, noncombustible, polyethylene film that conforms to requirements set forth by NFPA 701. Provide for the largest size possible to minimize seams.

D. Treat encapsulated (lock down) materials as permanent building materials. Materials shall have a flame spread of no more than 25 and smoke development not greater than 50. Materials used for encapsulation are subject to review and acceptance by the SDR prior to use.

E. Provide surfactant consisting of 50% polyoxyethylene ether and 50% polyoxyethylene ester, or equivalent. Mix with water to provide a concentration of 0.03 liters (1 ounce) surfactant to 19 liters (5 gallons) water, or in accordance with manufacturer's instructions.

F. Provide tape capable of sealing joints of adjacent plastic sheets or for attachment of polyethylene to finished or unfinished surfaces of dissimilar materials and capable of adhering under both dry and wet conditions. Tape shall have no less than a minimum width of 50 mm (2 inches) with cloth backing.

G. Warning labels and signs shall comply with 29 CFR 1926.1101.

H. Provide other materials such as nails and hardware, which may be required to construct and dismantle decontamination area and barriers that isolate the work area.

I. Contractor must store chemicals by DOT compatibility and in secondary containment. Secondary containment must be equivalent to 100% of the largest container or 10% of the total volume of containers (per hazard class) whichever is greater.

2.02 HEPA FILTERED FAN UNITS

A. Provide HEPA filtered fan units of durable materials able to withstand damage from rough handling and transportation. Provide cabinetry to fit through standard size doorways. Provide units whose cabinets are factory sealed to prevent asbestos containing dust from being released during use, transport or maintenance. Seal all openings to HEPA filtered fan units when not in containment. Arrange unit cabinet to provide access to and replacement of all air filters. Mount units on casters or wheels.

1. Fans shall be centrifugal type and sized to draw a desired air flow through filters in the unit with a maximum pressure drop of 25 mm (1 inch) of water gauge resistance.

2. Provide units with continuous rubber gasket located between the filter and filter housing to form tight seal. Gasket material shall be no less than 6 mm (1/4 inch) thick and 18 mm (3/4 inch) wide.

B. Provide HEPA filters with filter media folded into closely pleated panels and completely sealed on all edges with a structurally rigid frame.

1. Provide individually tested HEPA filters certified by the manufacturer to have an efficiency of not less than 99.97% when challenged with 0.03 mm dioctylphthalate (DOP) particles when tested in accordance with Military Standard Number 282 and Army Instruction Manual 136-300-175A. Provide filters bearing a UL586 label indicating ability to perform under specified conditions.

2. Mark filters with name of manufacturer, serial number, air flow rating, efficiency and resistance, and direction of test air flow.

C. SDR shall witness HEPA filter changes conducted on site. HEPA filters shall be numbered and dated when installed into machines.

2.03 RESPIRATOR PROTECTION

A. All respirators, including powered air purifying respirators and negative pressure air purifying respirators, shall be approved by the Mine Safety and Health Administration (MSHA) and NIOSH for use in atmospheres containing asbestos fibers. Provide personal and respirator protection during all phases of asbestos abatement, including the bagging of waste, wrapping of ACM, waste load out, and the loading and unloading of waste.

B. Provide a full facepiece supplied air respirator operated in the pressure demand mode equipped with an auxiliary positive pressure self contained breathing appartus for all employees within the regulated area where work is being performed for which a negative exposure assessment has not been produced.

C. Unless otherwise specified, provide full face powered air purifying respirators with disposable HEPA filter cartridges. This is the minimum respirator protection permitted for all phases of abatement activities. Unless visible or damaged asbestos is present or work will potentially impact asbestos, half mask respirators may be used during preparation of work site, precleaning of site, and during tear down.

D. Provide appropriate combination HEPA filters to all workers on site when any solvents are being used. Protect workers from unsafe work environment with regards to organic vapors, gases or other compounds in accordance with 29 CFR 1910.134.

2.04 TYPE "C" SYSTEMS

A. If specified, Type "C" respirator protection system shall be used and shall meet no less than the following requirements:

1. System shall provide a minimum instantaneous flow of 4.72 liters/second (10 CFM) per man peak load for the maximum crew size.

2. Operate Type "C" respirator in the pressure demand mode.

3. Equip Type "C" respirator with nose cup and emergency back-up HEPA filter or emergency egress bottle with a minimum of 5 minute air capacity. Back-up HEPA filter is intended for emergency egress only and does not replace the need for a reserve air system.

4. Provide NIOSH approved hoses.

B. Compressor:

1. Compressor shall consist of drive system, compressor, all gauges, tubing, piping, valving, intercoolers, and aftercoolers, water separation, water holding, and water blowdown or water removal systems, constant speed type automatic unloader, and adsorption filtration purification system. Compressor shall start and run at temperatures as low as -6.66°C (20°F).

2. Compressor intake shall be a combination of flexible and rigid piping which will allow compressor intake to be remotely positioned, at least 4500 mm (15 feet) horizontally and 4500 mm (15 feet) vertically from the compressor. Locate dust filter at remote intake point.

3. Do not use gasoline or diesel drive units unless approved by SDR. If approved, provide additional exhaust plumbing to locate exhaust point at least 4500 mm (15 feet) horizontally and 4500 mm (15 feet) vertically from compressor. Direct exhaust at a minimum 30 degree angle upward

and away from the compressor. Minimum horizontal separation of intake and exhaust shall be 7500 mm (25 feet). Both intake and exhaust plumbing shall be easily assembled and disassembled for reuse at successive locations. Do not place exhaust within 7500 mm (25 feet) of any building air intake or intake within 7500 mm (25 feet) of any building exhaust.

4. Fit output of each stage of compression with air cooled intercooler coil capable of removing at least 98% of the heat of compression on a day which ambient air temperature is 35°C (95°F), with 75% relative humidity at ambient absolute air pressure at sea level standard atmospheric pressure. Use ambient air, and 35°C (95°F), 75% R.H., as heat removal medium.

5. Fit each stage of compression with a water accumulator removal system with drains. The drain may be automatic or manual valve.

6. Fit each stage with a automatic resetting pressure relief device. All pressure components protected by pressure relief devices, including cooling coils, water accumulator drain bottles, and all interconnected pressure containing tubing, piping, and gauges, shall be designed to withstand at least 3 times the relief pressure setting without failure. Relief pressure setting shall not be less than 1.3 times normal working pressure of the stage being protected.

7. Receiver volume shall be no less than 6500 cc (400 cubic inches) water volume. Fit receiver with a dual pressure relief device consisting of one resettable relief device plus one burst disc type relief device. Set relief pressure setting on resettable relief device not less than 1.5 times pressure setting of burst disc type relief device. Fit receiver with a gravity located drain to drain 100% of liquid water from receiver tank.

8. Compressor manufacturer or rebuilder shall certify that all relief pressure settings and relief device flow requirements have been verified by actual flow and pressure tests before installation in compressor.

9. Hose live length from compressor to each respirator shall be less than 90 m (300 feet).

10. Compressor controls shall be packaged with compressor and include stop/start switch, automatic low oil pressure shutdown switch, and manual hold low oil pressure bypass switch.

    a. The controls shall include manual drain valves and pressure gauges on each stage. Manual drain valve shall be installed on the final compressor receiver tank. All drain valving shall be plumbed to a common instrument panel and located in logical sequence. Gauges

and drain valving shall be identified and labeled with the number of the stage being controlled.

b. Controls shall be constant speed type. When machine unloader functions, drain tanks of all stages shall be automatically drained. Water drain action shall stop automatically before or at load or reset pressure. The automatic unloader water drain is in addition to, and does not replace manual drain valves for each stage.

C. Compressed Air Purification System:

1. Provide adsorption type compressor air purification system consisting of a minimum of four chambers.

2. The system shall be capable of producing Grade "D" air as specified by the Compressed Gas Association (CGA) Commodity Specification G-71 - 1966. Contaminants not listed in Grade "D" air specification shall not exceed one tenth of Threshold Limit Values (TLVs) for chemical substances in work environment.

3. Include filter change indicators with the compressor. Indicators may be either color change or time of use type. If time of-use type is chosen, include compressor run-time meter. Provide prepackaged adsorption filter replacement canisters as required.

4. Install high pressure particle filter immediately following final adsorption canister filter installation. Particle filter shall be capable of four times maximum normal flow of compressor output and shall not pass particles more than 10 microns in size. The particle filter element shall be certified by the compressor manufacturer to withstand the full system pressure of 300 kg/cm2 (4000 psi) in case of complete filter blockage. Provide particle filter replacement elements as required.

D. Reserve System:

1. Provide fail-safe reserve system. System shall have high pressure reserve with minimum of 2 hours reserve for maximum crew, shall not depend on stand-by components to operate in event of compressor shutdown, and shall not depend on electrical power to operate.

2. High pressure air tanks providing required storage shall be commercially available steel tanks, hydrostatically tested and certified by DOT, ASME (Unfired Pressure Vessels), National Board, or Hartford Steam Boiler specification and testing systems. Steel tanks shall be appropriately stamped and date-stamped as required by testing and certification agency. Do not use aluminum tanks.

3. Secure and protect tanks to prevent breakage of high pressure components.

4. No component, fitting, threaded, or flare pressure joint shall leak under bubble testing.

5. Do not include internal high pressure components which can be used either to isolate or inadvertently isolate any single tank from other reserve tanks in assembly.

E. Air System Operational Capacity Test:

1. Fully install system with compressor, reserve system, and sufficient outlets for maximum crew size.

2. Start compressor and allow it to bring system up to full pressure.

3. Connect maximum number of workers that will simultaneously use the system during the project to system and start test timing.

4. Sample air quality for oxygen, carbon dioxide, carbon monoxide, condensed hydrocarbons, odor, and condensed water every four hours while machine is operating. Requirements for Grade "D" air shall be met.

5. System shall support full complement of workers for a continuous uninterrupted work period of 24 hours.

F. Verification Test for 2-hour Reserve Time:

1. Start compressor and allow it to bring system up to operating capacity.

2. Connect maximum number of workers that will simultaneously use the system during the project to system.

3. Stop compressor and start reserve timing simultaneously.

4. Allow a minimum of 2 hours to elapse prior to cessation of flow of Grade "D" air.

5. Do not restart compressor during the test.

2.05 PERSONNEL PROTECTIVE CLOTHING AND EQUIPMENT

A. Provide protective clothing suitable for abatement activity. Changes of clothing shall be made available daily for authorized visitors.

B. Provide the following protective clothing and equipment:

1. Disposable full body coveralls with elastic wrists, ankle and face closure, and integral hood and foot coverings.

2. Disposable undergarments.

PART 3 EXECUTION

3.01 CRITICAL BARRIERS

A. Protect fixed objects remaining within proposed abatement work area during all phases of construction and abatement.

B. Protect exposed pipes, ventilation ducts, conduits, cabinets and enclosures, switches and receptacles, electrical power bus ducts, panels and such similar items from exposure to asbestos fibers.

C. Protect areas immediately adjacent to removal areas such as corridors or hallways which are not within the proposed area scheduled for asbestos abatement, but are necessary routes to and from work areas, with plastic on floor, walls and ceiling. At Contractor's option, plastic enclosed framed-in tunnels may be used in lieu of installation of polyethylene on walls and ceilings.

D. Seal airtight and contain abatement work area. Seal openings including doorways, windows, tunnels, ducts, grilles, diffusers, skylights, or openings through which pipe conduit passes, or any other openings with noncombustible 0.15 mm (6 mil) polyethylene. Clean fixed objects within the proposed work area using HEPA vacuum equipment or wet-cleaning methods or both as appropriate. Enclose with securely fastened polyethylene sheeting.

3.02 DECONTAMINATION UNIT

A. Construct decontamination unit in such a manner as not to compromise containment.

1. Build suitable wood, metal stud, or PVC frame for decontamination unit. Existing room or enclosure may be used upon approval by SDR. Portable, prefabricated units may, at Contractor's option, be used if approved during submittal process. Approval of decontamination unit shall be based upon, but not limited to, construction, floor plan, dimensions, materials, sizes, thicknesses, plumbing, and electrical outlets.

2. Connect decontamination unit to work area with framed-in tunnels.

3. In non-emergency cases, provide access between contaminated and uncontaminated rooms or areas through a decontamination enclosure system. Unless otherwise noted, provide access between any two rooms within decontamination unit through an air lock with two curtained doorways.

4. Construct worker and visitor decontamination unit adjoining work area consisting of a minimum of three main rooms.

   a. Connect clean room to shower room by one air lock complete with a curtained doorway. Decontamination unit shall be large enough to provide storage for the worker's street clothes and towels.

   b. Connect shower room to equipment room and clean room by an air lock. The shower room shall contain:

      (1) Hot and cold water to shower. If necessary, provide a portable water heater to supply hot water.

      (2) A minimum of one shower for every ten employees.

      (3) Removable shower grate.

      (4) Sufficient soap, shampoo, and disposable towels.

      (5) Opaque curtains at each air lock.

   c. Connect equipment (dirty) room to work area with an air lock leading to shower room. In addition, equipment room shall contain a marked container for discarded contaminated clothing.

B. Construct a separate equipment decontamination enclosure consisting of two totally enclosed chambers, a washroom and a holding area. Connect washroom, consisting of an air lock, to the holding area by a curtained doorway. Connect holding area to any uncontaminated area by a curtained doorway. Use these spaces for cleaning and decontamination of bagged waste. In addition, this is the ingress/egress point for equipment. Thoroughly decontaminate equipment or seal with 0.15 mm (6 mil) poly before removal to an uncontaminated area. Visually inspect the waste load-out daily for damage and make necessary repairs as needed.

C. Workers shall wear double full body disposable suits when performing small scale, short duration abatement work. Workers shall decontaminate by using a HEPA vacuum to remove visible debris. Provide a contiguous or remote wet decontamination facility, as required, for use upon exit from the work area.

3.03 REGULATED AREA PREPARATION

A. Using 0.15 mm (6 mil) minimum fire-retardant polyethylene for floor and 0.1 mm (4 mil) minimum fire-retardant polyethylene for walls and ceilings, install first layer of plastic sheeting. Turn polyethylene on floor and ceilings so that plastic extends at least 300 mm (12 inches) on walls. Affix wall sheeting to the floor and ceiling layer, overlapping the floor and ceiling polyethylene a minimum of 300

mm (12 inches). Securely seal seams on floor and wall using tape. Use water gelling chemical at all seams for both layers of floor polyethylene.

B. Follow the same installation procedures for the second layer of floor and wall polyethylene that were followed for first layer.

C. If floor coverings are to be removed, do not install floor polyethylene until after floor coverings are removed.

D. Ensure barriers and plastic linings are effectively sealed and taped. Repair damaged barriers and defects immediately.

E. Visually inspect the enclosures at beginning and end of each work day.

F. Use chemical smoke generator or smoke bomb as test methods to verify effectiveness of barriers.

3.04 GLOVEBAG REMOVAL TECHNIQUES

A. Asbestos removal using glovebag techniques shall only be employed for removing ACM where full area preparation is impractical. Glovebag removal shall not be used if the use if the glovebag will cause fiber release from sections of the work area that are not enclosed. Glovebags are single use items, unless they have been designed and certified for multiple use.

B. Work Area Preparation:

1. Cover floor with plastic sheeting sealed to the floor with tape. Use a minimum of two layers of 0.15 mm (6 mil) plastic on floors.

2. Maintain emergency and fire exits from the work area.

C. Glovebag Removal Procedures:

1. Verify that the pipe, valve, etc. is not too hot to work on.

2. Determine the size of glovebag needed to fit around ACM to be removed.

3. Place all tools in tool pouch and attach glovebag to work. Ensure that glovebag is secured to the work so that it is able to support itself and all materials in it. Seal the glovebag to make an airtight seal.

4. Thoroughly wet the ACM inside bag with amended water. Apply differential pressure to the glovebag using a HEPA vacuum.

5. Remove ACM while wetting with amended water. Inspect work area and clean visible accumulations of ACM with brush and wet-wipe. Apply encapsulant and seal exposed ends.

6. Place tools in glove and pull glove inside out. Seal glove from bag and cut off glove.

7. Wash down inside bag with amended water, ensuring that all debris is in bottom of bag. Remove air from bag using HEPA filter equipped vacuum. Twist and seal bag with tape or tie above the debris. Remove glovebag and immediately place in a 0.15 mm (6 mil) disposal bag.

8. Twist and seal disposal bag at top, gooseneck bag, and seal again.

3.05 MINI-ENCLOSURE REMOVAL TECHNIQUES

A. Cover sides of framing with a double layer of plastic sheeting sealed with tape. Edges of sheeting and partition shall be airtight. Cover floor so that plastic extends a minimum of 30 mm (12 inches) up on walls of the frame. Cover ceiling so that plastic extends a minimum of 30 mm (12 inches) down on walls of the frame. Cover walls with plastic sheeting to the floor level and overlap the floor and ceiling material a minimum of 30 mm (12 inches) Remove a section of plastic as required to allow work to be performed. In the event that an entire side of the enclosure needs to be removed to perform work, the enclosure may be built accordingly.

B. Seal any penetrations airtight with tape.

C. Construct a 2-stage decontamination facility of 0.15 mm (6 mil) thick plastic sheeting and suitable framing. The facility shall be contiguous to the mini-enclosure and is necessary to allow workers to HEPA vacuum off their protective suits and don a second suit over the first before leaving the facility and proceeding to the decontamination area.

D. Commercially available mini-enclosures may be used.

3.06 DIFFERENTIAL AIR PRESSURE

A. Ambient air pressure in contaminated areas shall be less than that of uncontaminated areas. Differential air pressure shall be required continuously (24 hours a day) from the start of work in the area to the time that final air clearance samples have been collected and results received. Exhaust sufficient amount of air to create a differential pressure of no less than --0.5 mm (-0.02 inches). of water within work area with respect to areas outside work area. Target a differential pressure measurement of -1 mm (-0.04 inches). of water within work area with respect to outside work area. Filter all air exhausted from the

contaminated area with HEPA filtered fan units before exhausting it from the building. Monitor pressure differential at worker and equipment decontamination units with a differential pressure meter equipped with continuous recorder. Meter shall be equipped with warning buzzer which shall sound if pressure differential drops below set level of differential pressure. Differential air pressure system testing shall take place before any work will be allowed to proceed. SDR shall perform the test. Notify SDR 24 hours prior to requesting testing.

B. Use a magnehelic gauge or manometer to measure pressure drop across HEPA filters and to indicate when filters have become loaded and need to be changed. Affix a table indicating usable air-handling capacity for various static pressure readings on magnehelic gauge near gauge for reference. Reference the magnehelic reading indicating at what point filters should be changed next to unit. Locate an elapsed time meter to show total accumulated hours of operation within sight of unit. After containment has been constructed, start each negative air filtration machine one at a time. SDR shall observe barriers and polyethylene sheeting and determine whether DECON curtains move slightly toward work area. SDR shall use either aspirator bulb or ventilation smoke tube to visually check performance and direction of air flow through openings in barrier. SDR shall verify static pressure differential across barrier by use of a magnehelic gauge. Provide no less than a 1800 mm (6 feet) piece of Tygon tubing at HEPA filter machine exhaust location(s), leaving 1200 mm (4 feet) of slack outside work area. Tape each penetration to prevent air leaks. In addition, provide measuring points at DECON and waste load-out. Other monitoring points may be required and will be at the discretion of SDR.

C. After sealing work area, and constructing barriers and decontamination units, air pressure in work area shall be less than the uncontaminated area outside the barrier.

1. Place HEPA filtration units in accordance with the Contractor's approved work plan.

2. Run HEPA filtration units continuously to maintain a constant negative pressure until decontamination of work area is complete. Do not turn off units at end of work shift or when removal operations temporarily stop.

3. Maintain a minimum of one additional HEPA filtration unit on site in case of equipment failure.

4. Utilize a minimum of one additional HEPA filtration unit in immediate asbestos abatement work area as an air scrubber to reduce airborne fibers.

5. Maintain copies of all filter changes for HEPA filtered air units.

D. Replace filter when the pressure drop across filters as determined by magnehelic gauge or manometer exceeds manufacturer's recommendations. Replace prefilter

with the unit running. If pressure drop is still not sufficient, replace the intermediate filter. Replace HEPA filter last.

E. Exhaust differential pressure units outside of building and a minimum of 7500 mm (25 feet) away from any building air intakes. Where this is not feasible, connect HEPA filtration units in series and exhaust within the construction area, only after review and approval by SDR. If necessary, remove exterior glazing and reinstall in order to exhaust air filtration units to outside air. If solvents or other potential contaminants are used, provide exhaust to the outside.

F. Do not conduct removal activities without proper differential air pressure.

G. Equip HEPA filtration unit with filtration equipment in accordance with ANSI Z9.2.

3.07 AIR MONITORING

A. Industrial hygiene technicians shall determine the appropriate air sample volume for each sample. Volume shall be based on achieving the detection limit to meet maximum allowable fiber count and work site conditions with a 95% confidence level according to NIOSH 7400 method of air sampling.

1. Provide continuous OSHA compliance air monitoring throughout all phases of abatement which include: pre-abatement activities, abatement, and post-abatement. Conduct air monitoring whenever workers are required to wear respirators. Personal air sampling shall be required at waste storage and disposal sites.

2. Determine which workers in each work area are likely to experience the most severe exposure. Collect 8 hour time weighted average (TWA) and 30 minute excursion samples on these workers. Selected workers shall wear a personal sampling pump and the air sample(s) shall be drawn from the breathing zone. Collect representative samples on at least 25% of the work force for each job classification on each shift.

3.08 WORKER PROTECTION

A. Provide and post decontamination and work procedures to be followed by workers and authorized visitors in the equipment room and clean room.

B. Clean dust and asbestos fibers off equipment using HEPA vacuum and wet-wipe techniques prior to entering and leaving work area.

C. Use the following for personnel to follow upon entering the job-site and work area:

1. Workers shall be fully protected with specified respirators and protective clothing from the time of first potential disturbance of asbestos-containing or contaminated materials prior to commencing actual asbestos abatement until final cleanup completion.

2. Workers shall not eat, drink, smoke, or chew gum or tobacco while in a regulated area. No smoking shall be allowed within any facility.

3. All breaks and rest periods shall be held outside the work area.

4. Decontamination procedures shall be followed prior to exiting work area except in extreme emergencies.

5. In case of work area evacuation, work activities shall stop and personnel shall proceed to the predetermined location. Take precautions to minimize spread of asbestos-containing particles in uncontaminated space wherever possible.

D. Maintain first-aid items adjacent to work area. Do not permit workers to reach through plastic or air lock door to get water or first-aid supplies during break periods. In event of minor injury, administer first aid to injured personnel after decontamination. Remove seriously injured personnel from work area without delay for decontamination.

E. Provide each worker with adequate protection from the environment during cold weather.

F. Take precautions to prevent heat stress.

G. Either the project superintendent or foreman shall be inside the work area at all times while work is in progress when full enclosure containment is used. If the work plan does not require full enclosure, the foreman or superintendent shall be within sight of the work area at all times.

3.09 REMOVAL OF ASBESTOS-CONTAINING MATERIALS

A. General Requirements:

1. Utilize only approved wet removal techniques. Any variances to these requirements shall first have written approval from the EPA office having jurisdiction and be reviewed and accepted by SDR prior to use. SDR shall hold the Contractor responsible for any charges of noncompliance which occur because of deviations from these conditions. Work shall be performed by persons trained, experienced, and accredited to remove, treat, clean, handle, and dispose of asbestos-containing or contaminated materials.

2. Do not permit deviations from the work plan unless reviewed and approved by the SDR.

3. Conduct asbestos abatement activities under negative air pressure established within a regulated area or in a non-enclosed regulated area based on the work plan.

4. During each day's work, double bag bulk asbestos materials in 0.15 mm (6 mil) thick bags before it dries prior to exit from containment. Do not allow asbestos material to lay on the floor overnight. Place material in leak-tight containers. Remove air from bags with HEPA filter vacuum prior to sealing. Seal, gooseneck, and seal bag again. Place caution labels in accordance to 29 CFR 1926.1101 and 49 CFR 171-177. Place SNL provided inventory labels on each container.

5. Unless defined as an emergency, do not proceed with asbestos abatement until all notifications to federal, state, regional and local enforcement agencies have been acknowledged, received, and approved.

6. Do not drop asbestos material from a height greater than 4500 mm (15 feet).

7. Fiber Limits Exceeded:

    a. SDR reserves the right to halt asbestos abatement work within the regulated area when analysis of air samples indicate a fiber count in excess of allowable limits. Air sample personnel shall immediately notify the project superintendent and SDR verbally of conditions at work site.

    b. Immediately following discovery of fiber counts exceeding specified maximum allowable level(s), proceed as follows:

        (1) Immediately stop abatement work. Do not begin new abatement work.

        (2) Contact SDR and give specifics of the work area conditions causing work stoppage. Air sampling personnel shall follow any notifications of work stoppage with documentation to SDR stating time of work stoppage, conditions of work site, names of personnel within work area, foreman or superintendent in work area, what equipment was in use, and what material was being removed at that time.

        (3) Project superintendent and SDR shall re-check work procedures, barriers, equipment, to determine possible causes of high fiber counts or breaches of containment.

        (4) Make immediate repairs to containment or equipment determined to cause high fiber release as directed by SDR.

(5) Wet-clean and HEPA vacuum general locations inside and outside work area as directed by SDR.

(6) Change work practices to bring fiber concentrations under acceptable level.

(7) SDR may mandate change in work practices after visual inspection. This may include mandatory inside and outside area air samples be collected by Contractor until fiber concentration counts are below maximum allowable limit. SDR reserves the right to have other samples collected and reserves the right to have Contractor's samples analyzed by others at SNL's expense.

(8) Contractor may resume work after receiving written authorization from SDR.

c. Unless otherwise specified, Type "C" supplied air systems shall be utilized during abatement when:

(1) Asbestos fiber count is determined to exceed 0.1 f/cc for type of abatement activity taking place.

(2) During gross removal of surfacing materials or when materials containing amosite are hand scraped.

(3) Grade "D" air is necessary to provide worker protection against the environment within the regulated area.

(4) Designed abatement activity requires Type "C" respiratory protection.

(5) In the event that a dry removal technique is approved by the EPA or local agency.

B. Sprayed-on Ceiling Texture or Fireproofing Removal:

1. Spray ACM with amended water using equipment capable of providing a "mist" application reducing fiber release. Saturate materials sufficiently so that amended water penetrates to substrate without causing excess dripping. Spray ACM and mist air repeatedly during work process to maintain a wet condition and minimize fiber release. Do not oversaturate materials.

2. Use removal techniques, methods, and equipment which will notpermit fiber count to exceed 0.1 fibers/cc of air during removal operations.

3. Do not permit material to fall more than 2400 mm (8 feet) without intermediate catching devices, such as platforms or inclined chutes.

4. Remove material in manageable sections.

5. If surfaces are to be scraped, wet brush or sponge surface clean in order to remove any remaining fibers after stripping the surface of ACM. Remove all visible material.

C. Pipe Insulation, Flex Couplings or Hard Fittings on Fiberglass Glovebag Removal:

1. Utilize all normal engineering controls during the removal process, including use of amended water.

2. Maintain continuous negative pressure inside glovebags. Demonstrate the integrity of the negative pressure system by smoke test. Seal leaks immediately and test glovebag until no leaks are detected. Unless otherwise directed, perform glovebag removal within negative-pressure enclosure.

3. Identify work area as a regulated area with barrier tape and appropriate warning sign(s) a minimum of 4500 mm (15 feet) from the ACM. Notify employees within the immediate vicinity of work of the abatement project. Provide respirators and protective clothing to abatement workers.

4. Insert all necessary tools and equipment into bag prior to sealing. Attach glovebag to pipe using approved methods. If size of pipe warrants, insert a small, rigid plastic collar into bag to ensure that bag does not collapse when negative pressure is created.

5. Removal process shall be thorough and include encapsulant being sprayed onto the open ends of the pipe. Seal and encapsulate exposed ends of remaining pipe insulation.

6. Prior to removing glovebag from pipe, collapse glovebag using HEPA vacuum. Twist and tape glovebag to keep removed ACM in bottom of bag. Slip a 0.15 mm (6 mil) disposal bag over glovebag, then remove glovebag from pipe and fold down into 0.15 mm (6 mil) disposal bag. Dispose of all material as asbestos waste.

7. When removal of ACM has been completed, workers shall undergo complete decontamination.

D. Asbestos Siding Removal (exterior):

1. Identify area to be worked on as a regulated area with barrier tape and appropriate warning sign(s) a minimum of 4500 mm (15 feet) from the ACM.

2. Prepare work area by placing a single layer of 0.15 mm (6 mil) polyethylene drop cloth immediately in front of the area to be abated. Extend drop cloth to completely catch falling debris generated by the removal process.

3. Encapsulate damaged, unpainted panel surfaces with airless spray equipment.

4. Use equipment capable of producing a mist application to reduce release of fibers. Spray materials to be removed repeatedly during work process maintaining a wet condition and minimizing fiber release. Do not oversaturate materials.

5. Use adequate engineered control methods to maintain the specified air fiber count.

6. Remove materials in manageable sections. Do not drop or break siding. Do not allow the material to dry. Do not allow material to fall.

7. Place waste in double 0.15 mm (6 mil) polyethylene asbestos disposal bags or wrap in two layers of 0.15 mm (6 mil) polyethylene if required due to size.

8. Remove fasteners used to hold siding in place with a minimum of disturbance to the siding.

E. Ceiling Tile and Mastic Removal:

1. Spray ceiling tiles with amended water using equipment capable of providing mist to reduce fiber release.

2. Wet-clean and HEPA vacuum surface mounted lighting fixtures prior to removal. Remove and wrap fixtures in polyethylene. Wet-wipe fluorescent tubes.

3. Wet-clean and HEPA vacuum diffusers and return air grilles. Remove, wrap in polyethylene.

4. Spray ceiling tiles with amended water while removing ceiling tiles. If ceiling tiles are friable, spray a bridging encapsulant or penetrating encapsulant on ceiling tiles to control fiber release prior to removal. Spray ceiling tiles continuously during removal and bagging.

5. Remove contaminated mastic by slicing remaining mastic from substrate.

6. Wet-wipe or HEPA vacuum remaining substrate.

7. Encapsulate edges or corners of asbestos-containing ceiling tiles in area that is to remain unless otherwise specified.

F. Floor Coverings and Mastic Removal:

1. Cover walls and ceiling surfaces of work area with minimum of two layers of 0.1 mm (4 mil) polyethylene. Apply wall layers first, making sure plastic is turned along ceiling at least 300 mm (12 inches) and securely fastened. Apply ceiling layers overlapping wall layers at least 300 mm (12 inches). Support ceiling layers as required. Glue, tape, or staple joints and seams securely to minimize damage to existing walls or floor, and to prevent water or air movement through covered area.

2. Spray asbestos material with amended water using equipment capable of providing mist application reducing fiber release. Spray ACM repeatedly during work process to maintain a wet condition and to minimize fiber release. Do not oversaturate materials.

3. Use removal techniques, methods, and equipment which will not permit the fiber count during removal operations to exceed specified limits. Do not use mechanical equipment for sanding and grinding.

4. Removal techniques utilizing solvents shall conform to the following conditions:

   a. Flash point (open or closed cup) > 93.34°C (>200°F).

   b. Auto ignition temperature > 315.56°C (>600°F).

   c. No odor.

   d. pH neutral.

   e. Aromatic vapors < 100 ppm.

   f. Will not react violently with water.

5. Obtain approval from SDR for alternative mastic removal methods.

6. Use combination HEPA filters approved for both use with solvent used and asbestos fibers.

7. Remove tile and mastic down to bare concrete to include any leveling compounds.

G. Ceiling Panel Removal:

1. De-energize light fixtures prior to beginning work.

2. Double the air exchange rate of the air filtration equipment to provide air flow from the area above the ceiling. Include the total volume of air above the suspended ceiling in the calculations.

3. Remove selected ceiling panels around outer core walls. Spray ceiling panels with amended water using equipment capable of providing mist application to reduce fiber release.

4. Extend critical barriers above ceiling to deck to prohibit fiber release into uncontaminated areas bordering abatement area.

5. Remove all ceiling panels while continuously applying amended water. If ceiling panels are highly friable, Contractor may choose to spray an encapsulant on both top and bottom surfaces of ceiling panels which should be allowed to dry before removing panels. Do not oversaturate materials. Dispose of as ACM.

6. Utilize removal techniques to maintain a fiber count within the specified limits.

7. Wet-wipe exposed HVAC diffusers and returns and other mechanical system components.

8. Wet-wipe and HEPA vacuum light fixtures and other electrical devices within area to be abated. Remove fixtures if ceiling grid is being removed.

9. Wet-wipe and HEPA vacuum ceiling grid and ceiling grid tie wires.

H. Wall Panel Removal (including mastic removal):

1. Ensure that air handling systems are shut off and isolated.

2. Enclose work area with plastic sheeting. Use minimum of one layer of 0.15 mm (6 mil) plastic on floor and one layer of 0.1 mm (4 mil) plastic on walls and ceilings that are to remain. Glue, tape, or staple all joints and seams to minimize damage to existing walls or floors and to prevent water or air movement through covered area.

3. Use removal techniques, methods and equipment which will not permit the fiber count during wall panel operations to exceed the specified limits.

4. Spray asbestos material with amended water using equipment capable of providing a mist application. Saturate materials until adequately wet. Spray asbestos material repeatedly during work process to maintain a wet condition and minimize fiber release. Do not oversaturate materials.

5. Do not use saws to remove panels.

6. After ACM is removed, double wrap panels and pieces in 0.15 mm (6 mil) plastic sheets and label according to procedures stated within these specifications.

I. Debris, Contaminated Soil, and Exterior Application Removal:

1. Prepare work area in accordance with work plan by misting ACM and surrounding area with amended water.

2. Remove visible debris and place material, along with four inches of soil below material, in double 0.15 mm (6 mil) plastic bags using shovel.

3. Maintain constant mist of water around ACM as it is removed. Allow no visible dust.

4. Workers shall wear one additional (double) disposable coveralls along with other protective clothing specified.

5. Apply penetrating encapsulant to the remaining soil. Apply sufficient encapsulant to provide soil penetration a minimum of 20 mm (3/4 inch) deep.

6. During worker decontamination, HEPA vacuum outer layer of disposable coveralls and respiratory protective equipment at work area. Remove and dispose of both layers of disposable coveralls as contaminated waste.

J. Thermal System Insulation Removal (under gross removal conditions):

1. Spray ACM with amended water using equipment capable of providing mist application. Spray asbestos material repeatedly during work process to maintain wet condition and minimize fiber release. Do not oversaturate materials.

2. Utilize wet removal techniques and equipment that will maintain a fiber count within the specified limits.

3. Do not permit materials to fall more than 2400 mm (8 feet) without an intermediate catching devices such as platforms or inclined chutes.

4. Remove materials in manageable sections. Do not allow material to dry out. Begin cleanup of debris immediately.

5. If scraping is to be the removal method, wet brush or sponge substrate clean in order to remove any remaining fibers after stripping surface of ACM.

6. Collect removed materials and either wrap or place in disposal bags.

K. Transite Pipe Removal:

1. Isolate system.

2. Establish regulated area and fabricate air lock over system area to be worked on.

3. Utilize wet removal techniques and equipment to maintain air fiber count within the specified limits.

4. Encapsulate unpainted pipe surface or area with localized damage. Use airless spray equipment and allow to dry.

5. Spray ACM with amended water using equipment capable of providing mist. Spray ACM continuously to reduce fiber release during cutting activities.

6. Do not saw transite pipe unless no other means of cutting pipe is available. If pipe size permits and sawing is required, perform all work within a glovebag.

3.10 ASBESTOS ENCAPSULATION

A. General Requirements:

1. Extent of encapsulation includes lock-down of abated surfaces. Work includes sealing surfaces from which ACM has been removed and scratch coat plaster from which asbestos-containing finish has been removed.

a. Provide penetrating or bridging type encapsulant specifically designed for application to ACM.

b. Use only appropriate encapsulants having a flame spread index of less than 25, when dry, which have been tested in accordance with ASTM E-84.

c. Select appropriate encapsulants from those rated as "acceptable" when tested under procedures of "Battelle Columbus Laboratories" tests for evaluation of encapsulants for friable ACM.

d. Prior to encapsulating material, ensure surfaces are clean and any remaining ACM has been completely removed.

e. Review MSDS and provide workers with required protective equipment and assure that protective equipment is worn during application of encapsulant.

B. Spray-on Fireproofing and Spray-On Acoustical Texture Surfaces:

1. Surfaces to be encapsulated shall not be water-damaged or have loose or hanging ACM. Prepare surfaces for encapsulation as recommended by encapsulant manufacturer.

2. Fill damaged and missing areas of existing substrate to obtain suitable base for sealing and to restore continuity of existing material. Use specified asbestos-free replacement material in accordance with manufacturer's recommendations.

3. Comply with manufacturer's instructions for particular conditions of installation. Consult with manufacturer's technical representative for conditions not covered.

4. Encapsulate surfaces according to manufacturer's procedures for application.

C. Scratch-Coat Plaster and Other Surfaces:

1. Apply two coats of encapsulant to surfaces after ACM has been removed. Apply in accordance with the manufacturer's instructions for use of encapsulant for coating asbestos materials.

2. Apply encapsulant with airless spray gun, with air pressure and nozzle orifice recommended by encapsulant manufacturer.

3. Apply first coat of encapsulant while surfaces are still damp from asbestos removal procedures. If surface has been permitted to dry, vacuum surface with HEPA filtered vacuum cleaner prior to spraying surface with encapsulant.

4. Apply second coat over first coat in conformance to manufacturer's instructions.

5. Change color of second coat encapsulant so that visual confirmation of complete and uniform coverage of each coat is possible. Adhere to manufacturer's instructions for coloring.

6. Use heat resistant encapsulant products on high temperature piping and thermal fittings and equipment.

3.11 ASBESTOS ENCLOSURE

A. Asbestos-containing surfaces to be enclosed shall be in sound condition prior to enclosure.

B. Remove all loose and hanging material.

C. Encapsulate surface to be enclosed.

D. Secure hangers or other support devices.

E. After installation of hangers or other supporting devices and proper surface preparation, erect, install and seal the enclosure.

1. Provide enclosure.

2. Post OSHA required asbestos hazard warning signs on enclosure exterior and additional warning signs with the following information: "Asbestos is within this enclosure. Post signs at location designated by work plan. Provide signs with white background and 15 mm (1/2 inch) red block lettering on either aluminum, fiberglass or plastic material.

3.12 WASTE DISPOSAL

A. Do not allow debris to accumulate or remain on scaffolding, equipment, work area floor or other surfaces. Collect, properly package and remove ACM to either a holding area or waste rolloff by the end of each work shift.

1. Ensure ACM debris has been thoroughly treated with water and during the removal process, it is kept adequately wet using a low pressure mist.

2. Collect debris (asbestos-contaminated materials and ACM) and place it into 0.15 mm (6 mil) plastic bags, or wrap with two layers of 0.15 mm (6 mil) polyethylene, or place in rigid leak-tight containers.

a. Use double bag method for materials placed in plastic bags. After filling, wet-wipe outer surface of inner bag of any surface debris, collapse under HEPA filtered negative air, tape, gooseneck, and tape again. Place bag within another 0.15 mm (6 mil) disposal bag, tape, gooseneck, and tape again.

b. Use appropriate DOT and OSHA asbestos warning labels on 0.15 mm (6 mil) disposal bags.

3. Wrap all materials too large to be packaged into an 0.15 mm (6 mil) disposal bag with clear 0.15 mm (6 mil) polyethylene, providing a leak-tight seal. First wrap, wet-wipe, and then place a second leak-tight layer of 0.15 mm (6 mil) polyethylene over first layer. Prevent corners or sharp edges of wrapped material from penetrating first and second layers of polyethylene.

4. Using SNL provided labels, label each individually bagged or wrapped item with a unique and sequential number and project number, beginning with #1 and continuing until all disposable items are numbered.

a. Label all wrapped and bagged items daily. Maintain waste inventory at waste load-out. Inventory shall indicate whether numbered item is a wrapped , containered, or bagged.

b. Record each wrapped item's dimensions and corresponding sequential item number on the inventory.

c. Use impermeable black marker to write on each label. Labeling method shall also apply to any canister, drum, or rigid container used to ship and dispose of ACM. Place labels on each disposal item where clearly visible.

5. Provide a fully enclosed plastic tunnel or cart when loading material from waste load-out into enclosed rolloff.

6. Place bags of ACM removed from the work area through the equipment decontamination enclosure in a mechanically fastened drum or a second clean bag.

7. Clean drums or bags in the equipment decontamination enclosure and place in the enclosed rolloff.

B. Collect, filter, and properly dispose of wastewater. Wastewater filtration system shall be capable of filtering to at least 5 microns.

3.13 FINAL CLEANING

A. Gross cleanup shall take place immediately upon removal of ACM.

B. Workers wearing proper respiratory protection and clothing shall remove ACM while materials are still wet. Collect materials from floors using squeegees, plastic dust pans, or other appropriate tools and place in 0.15 mm (6 mil) bags or wrap, then transport to waste load-out. Do not use metal shovels or brooms to remove debris from polyethylene floors.

1. Remove visible ACM from substrate and from surfaces of polyethylene.

2. Remove any remaining fibers from substrate surfaces by brushing, and either wet-wiping or HEPA vacuuming or both.

C. Visually inspect for any residual asbestos in work area. If residual found, bag and remove.

D. Lightly mist contaminated layer of polyethylene with encapsulant to minimize release of airborne fibers.

E. Remove gross contamination from equipment in work area. Remove gross contamination from exteriors of negative air filtration units, scaffolding, ladders,

extension cords, hoses, and other equipment inside work area using HEPA vacuum and wet wiping methods. Change filters for HEPA filtration units that require replacement.

1. SNL will perform initial clearance tests with the limits of 0.01 fibers per cubic centimeter (f/cc) according to the methods described in NIOSH 7400 once the work area is clean of visible accumulations of asbestos. SNL shall be given one week written notice by the Contractor prior to the desired test date. Unless otherwise noted by the SDR, a minimum of 5 samples shall be collected per area. Each of the 5 samples must test less than or equal to 0.01 f/cc. Continue the wet-cleaning process until the designated fiber level is achieved. Additional testing due to fiber counts greater than 0.01 f/cc shall be at the Contractor's expense.

2. After successful completion of initial air test and before last layer of plastic sheeting is removed, apply one coat of asbestos encapsulant sealer following manufacturer's specifications for application. Encapsulant sealer shall be compatible with material to be reapplied to surface.

F. Remove inner layer of polyethylene. Maintain use all HEPA units, including "scrubber", during removal of innermost layer of polyethylene. Detach or cut first inside layer of polyethylene from bottom of wall. Use ladder to reach top of wall sheet. Gently detach inner sheet of work area enclosure from top of wall and fold inward to form a compact bundle which can be packaged in properly labeled 0.15 mm (6 mil) polyethylene bag for disposal. Remove visible debris, which may have leaked behind inner layer of polyethylene onto outer (final) layer of polyethylene, using HEPA vacuum and wet-wiping methods.

1. Begin cleaning walls and substrates located farthest away from HEPA filtration units using amended water along with wet-wiping and HEPA vacuuming. Use cotton rags or lint free paper towels to wipe surfaces. Dispose of used rags and towels as asbestos waste.

G. After receiving notice from the SDR, remove final layer of floor polyethylene by carefully folding polyethylene inward forming compact bundles easily bagged for disposal. Visually inspect for visible debris which might have leaked through polyethylene. Remove debris using HEPA vacuum and wet wiping methods. Leave seals on doors, vents, windows, and equipment in place. For carpet under final layer of floor polyethylene:

1. If carpet is specified for removal, lightly mist entire carpet with amended water before detaching it from floor. Roll carpet into bundle and wrap or bag with 0.15 mm (6 mil) polyethylene, seal with duct tape, and properly label for disposal.

2. If carpet is to remain, HEPA vacuum and steam clean carpet to remove stains caused by construction work activities.

H. Allow 24 hour settling period. Obtain written approval for deviations to settling period from SDR.

I. Wet-wipe and HEPA vacuum remaining surfaces within work area. Visually inspect area for remaining visible dust or debris to ensure that work area is free of contamination. Contact the SDR for a visual inspection. Do not proceed until the SDR has stated that Contractor has passed the visual inspection. The SDR shall utilize visual inspection methods stated in ASTM Standard E1368. The Contractor shall be responsible for any additional cleaning of the work area due to a failed inspection. Final air samples shall be taken only after the SDR has determined that surfaces in work area are dry and free of contamination.

J. Sandia shall conduct final air clearance using TEM or PCM air sample analysis, according to the size of the work area. If PCM is used, final air clearance shall follow NIOSH 7400 procedures, collecting a minimum of 5 samples per area unless otherwise noted, each with maximum fiber limit of 0.005 f/cc. SNL shall be given one week written notice by the Contractor prior to the desired test date. Additional air sampling costs due to failure to meet clearance limits shall be at the Contractor's expense.

K. Sampling, analysis and interpretation of TEM results shall be performed in accordance with EPA 40 CFR 763, subpart E, Appendix A, "Interim Transmission Electron Microscopy Analytical Methods - Mandatory and Non-mandatory - and Mandatory Section to Determine Completion of Response Actions". Non-mandatory provisions may be waived at the discretion of the SDR.

1. Minimum sample volume collected shall be 1,800 liters for 25 mm (1 inch) filters. A minimum of 8 samples shall be collected for each testing site consisting of the following:

   a. A minimum of five samples within the work area.

   b. A minimum of two field blanks shall be taken by removing the cap of the filter cassette for not more than 30 seconds immediately prior to sampling at the following locations:

      (1) Near entrance to work area.

      (2) At one of the ambient sites outside work area.

2. A sealed blank, which has not been opened in the field, shall be submitted with each set of samples.

3. Five samples shall be collected from the work area and analyzed. If asbestos structure concentrations per square millimeter for each sample is less than or

equal to 70 structures per square millimeter (s/mm2), the asbestos removal and cleanup activities within the work area shall be deemed to have been completed. If any sample exceed 70 s/mm2, the three blank filters shall be analyzed.

4. If the arithmetic mean concentration of structure per square millimeter on the blank filters is greater than 70 s/mm2, the analysis shall be terminated. The SDR shall identify and correct the source of blank contamination and collect a new set of samples.

5. If any structure concentrations of the five work area samples exceeds 70 s/mm2 and the arithmetic mean of structure concentrations of blank samples are less than 70 s/mm2, Contractor shall reclean work area and repeat the sampling process.

6. SDR shall determine when Contractor shall discontinue use of HEPA filtration units.

L. Supply one electric 750 W (1 hp) leaf blower and one electric 500 mm (20 inch) box fan for each 300 m3 (10000 cubic feet) of air volume in work area for use by SNL during aggressive air sampling. Provide electrical power to this equipment. Provide final cleaning of all equipment used by SNL during the inspection process.

M. Continue to clean work area until acceptable fiber level is achieved.

N. Continue personnel air monitoring during all phases of abatement, including final cleanup. Maintain results of personnel air monitoring in the job site log book and communicate daily to the SDR.

O. Allow three (3) days for TEM turnaround.

P. After final clearance has been achieved, obtain written approval by SDR for tear down. Remove critical barriers and decontamination unit.

1. Remove first innermost layer of polyethylene within decontamination unit following removal of first layer of polyethylene within work area, using same cleaning procedures.

2. After cleanup within work area is completed, decontaminate polyethylene on the walls of decontamination unit by lightly misted with amended water while removing polyethylene and folding plastic inward for bagging and disposal. Follow the same procedures (wet-wiping, HEPA vacuuming, and visual inspection for debris) during tear down of decontamination unit.

Q. After removal of decontamination unit, remove all traces of soil, waste materials, and other foreign matter from the project area.

3.14 RESTORATION

A. Restore work area as indicated

B. Notify SDR of any damage to the structure or facilities incurred as a result of this work.

3.15 DISPOSAL OF ASBESTOS CONTAMINATED OR CONTAINING WASTE

A. Coordinate disposal of asbestos contaminated and containing waste with the SDR.

B. SNL will provide enclosed 30 m3 (40-yard) rolloffs for temporary storage of bagged waste generated during removal. Contractor shall give 48 hours written notice to the SDR when additional rolloffs are required or when a rolloff is full and ready for disposal.

3.16 ASBESTOS WASTEWATER

A. Filter asbestos wastewater through a 5-micron filter prior to final disposal in a sanitary sewer. In absence of a sanitary sewer system at job site, filter wastewater through a 5-micron filter, pump into metal drums, and transport to sanitary sewer system for disposal. Double bag and dispose of wastewater filter as ACM.

END OF SECTION

SECTION 02110

CLEARING AND GRUBBING

PART 1 - GENERAL

1.01 RELATED DOCUMENTS

A. Drawings and general provisions of Contract, including General and Supplementary Conditions and Division-1 Specification sections, apply to work of this section.

1.02 DESCRIPTION

A. This section covers the work required to clear the site in preparation for grading operations.

1.03 SUBMITTALS

A. A preconstruction condition survey shall be made prior to the start of any on-site construction activities.

1. The Sandia Delegated Representative and the Contractor shall make a joint condition survey after which the Contractor shall prepare a brief report indicating on a layout plan the condition of trees, shrubs, grassed areas, pavement, sidewalks and other improvements immediately adjacent to the site of the work and adjacent to his assigned staging areas, storage areas and access routes as applicable.

2. The report shall be signed by both the Sandia Delegated Representative and the Contractor upon mutual agreement as to its accuracy and completeness.

1.04 JOB CONDITIONS

A. Protection shall be provided to prevent damage to existing improvements and trees indicated to remain in place on Sandia property and adjoining properties.

B. Damaged improvements shall be restored to their original condition, as acceptable to parties having jurisdiction.

C. Environmental Controls: Use water sprinkling, temporary enclosures, and other suitable methods to limit dust and dirt rising and scattering in air to lowest practical level. Comply with governing regulations pertaining to environmental protection.

PART 2 - PRODUCTS

Not applicable.

PART 3 - EXECUTION

3.01 CLEARING

A. Limits of clearing shall be all areas within contract limit lines.

B. Trees, saplings, shrubs, bushes, vines and other organic matter designated on the drawings to be retained shall not be defaced, injured, destroyed, or cut.

3.02 GRUBBING

A. Limits of grubbing shall coincide with the limits of clearing.

B. Stumps, roots over 4 inches in diameter, and matted roots within the limits of grubbing shall be removed to the following depth below finished subgrade.

1. Footings - 18 inches

2. Walks - 12 inches

3. Roads - 18 inches

4. Parking areas - 12 inches

5. Lawn areas - 12 inches

6. In the case of footings, roads, walks or other construction on fills, roots and stumps shall be removed to a depth of 18 inches below the original ground line.

3.03 DISPOSAL

A. Burning of materials on the site shall not be permitted.

B. Removal

1. Material to be removed shall be taken from the site as it accumulates.

2. Should the Contractor elect to continue to work beyond normal working hours, material to be removed shall not be allowed to accumulate for more than 48 hours.

END OF SECTION

SECTION 02210

SITE GRADING

PART 1 - GENERAL

1.01 RELATED DOCUMENTS

A. Drawings and general provisions of Contract, including General and Supplementary Conditions and Division-1 Specification sections, apply to work of this section.

1.02 DESCRIPTION

A. This section covers the work required to grade the site to the elevations and configuration shown on the Drawings.

1.03 QUALITY ASSURANCE

A. Compaction shall be in accordance with Specification Section 02250: Compaction Control and Testing.

B. The Sandia Delegated Representative shall be the sole and final judge of suitability of all materials.

C. Materials in question, pending test results, shall not be used in the work. The Contractor shall remove all materials that fail to meet the requirements of the specifications, whether in stockpiles or in place.

D. Fills, embankments, backfills or subgrades which do not meet the specification requirements shall be removed or recompacted until the requirements are satisfied.

1.04 PROTECTION

A. Protection of Existing Improvements

1. Protection shall be provided to prevent damage to existing improvements indicated to remain in place on Sandia property and adjoining properties.

2. Damaged improvements shall be restored to their original condition, as acceptable to the Sandia Delegated Representative.

3. Land areas outside the limits of permanent work performed under this contract shall be preserved in their present condition. The Contractor shall confine his construction activities to areas defined for work on the Drawings.

4. Dust Control: Water sprinkling, temporary enclosures, and other suitable methods shall be used to limit dust and dirt rising and scattering in the air to the lowest practical level.

5. Environmental Controls: Comply with governing regulations pertqining to environmental protection.

B. Protection of Existing Utilities

1. The Contractor shall verify all existing utility locations either shown or not shown on the Drawings.

2. The Contractor shall immediately notify the Sandia Delegated Representative of any damages to existing utilities.

3. Repairs to damaged utilities shall be made in accordance with the requirements of the Sandia Delegated Representative at no extra cost to Sandia.

4. The Contractor shall coordinate with the Sandia Delegated Representative for shutoff of or connection to active utilities. Existing utility services shall not be interrupted except as authorized in writing by the Sandia Delegated Representative.

C. Protection of Work Site: Fencing or other type protectors shall be provided to prevent unauthorized personnel from entering work sites.

1.05 JOB CONDITIONS

A. Classification of Excavation

1. No classification shall be made to differentiate the various surface and subsurface conditions the Contractor may encounter during his performance under this contract.

2. It is the Contractor's sole responsibility to verify the site surface and subsurface conditions.

B. Dewatering

1. Excavation and embankment shall be performed in such manner that the area of the site and the area immediately surrounding the site will be continually and effectively drained by gravity or temporary pumps.

2. Water shall not be permitted to accumulate in excavations or other areas of the site.

3. The excavation shall be drained by methods which prevent the softening of subgrades and embankments.

C. Blasting shall not be allowed.

D. Copies of the Geotechnical Report may be obtained from Sandia for interpretation of the site surface and subsurface conditions.

PART 2 - PRODUCTS

2.01 SUITABLE MATERIALS

A. Suitable materials for fill and backfill include materials that are free of debris, roots, organic or frozen materials, and stones having a maximum dimension of four (4) inches in the upper six (6) inches of fill or six (6) inches in the remainder of fill. Topsoil as defined in Section 02261: Topsoil, shall be used in the top 4 inches for all areas indicated for turfing or planting beds.

B. Otherwise suitable material which is unsuitable due to excess moisture content will not be classified as unsuitable material unless it cannot be dried by manipulation, aeration or blending with other materials to the satisfaction of the Sandia Delegated Representative.

C. Unsuitable materials shall include those materials that are determined by the Sandia Delegated Representative to be inadequate for providing a stable slope, fill, subgrade or foundation for structures.

D. Expansive clay soils shall be classified as unsuitable unless treated or mixed in a manner approved by the Sandia Delegated Representative.

E. If there are inadequate supplies of excavated materials on site to allow the grading of the site as indicated on the Drawings, the Contractor shall obtain suitable materials from off site. Before obtaining materials from off site, the Contractor shall submit a soil analysis of the materials to the Sandia Delegated Representative for approval.

2.02 SPOT SUBGRADE REINFORCEMENT MATERIAL

A. Spot subgrade reinforcement material shall consist of sound, tough, durable crushed stone or gravel with a filler of broken stone chips or sand.

B. Material shall meet the following gradation requirements:

Sieve	Mass Percent Passing
1 in.	100
3/4 in.	90-100
No. 4	0-10

PART 3 - EXECUTION

3.01 EXCAVATION

A. Excavation, regardless of material encountered, shall be performed to the lines and grades indicated on the Drawings, allowing for surfacing, base courses and topsoil.

B. Suitable excavated material shall be transported to and placed in fill areas within the limits of the work. Unsuitable material encountered within the limits of the work shall be excavated below the grade shown and replaced with suitable material as directed by the Sandia Delegated Representative.

C. Waste Material

1. No excavated material shall be wasted without the authorization of the Sandia Delegated Representative.

2. Surplus excavated material and unsuitable material shall be disposed of by the Contractor at his own expense.

3. Material authorized to be wasted shall be disposed of in such manner as not to obstruct the flow characteristics of any stream or to impair the efficiency or appearance of any structure.

D. No excavated material shall be deposited in a manner that may endanger a partly finished structure by direct pressure or by overloading banks contiguous to the operations or that may otherwise be detrimental to the completed work.

E. Blasting shall not be allowed.

3.02 EXCAVATION OF DITCHES

A. Ditches shall be cut accurately to the cross sections and grades indicated. Roots, stumps, rock and foreign matter in the sides and bottom of ditches shall be cut to conform to the slope, grade and shape of the section shown.

B. Care shall be taken not to excavate ditches below the grades indicated. Excessive ditch excavation shall be backfilled to grade with suitable, thoroughly compacted material.

C. Ditches shall be maintained by the Contractor until final acceptance of the work.

D. Excavated material shall not be deposited closer than three (3) feet from the edges of the ditches.

3.03 BACKFILL ADJACENT TO STRUCTURES

A. Backfill adjacent to structures shall be placed and compacted uniformly in such manner as to prevent wedging action or eccentric loading upon or against the structures.

B. Slopes bounding or within areas to be backfilled shall be stepped or serrated to prevent sliding of the fill.

C. During backfilling operations and in formation of embankments, equipment that will overload the structure in passing over and compacting these fills shall not be used.

3.04 PREPARATION OF GROUND SURFACE FOR FILL

A. Areas upon which fills are to be placed shall be cleared before the fill is started.

B. Sloped ground surfaces steeper than one (1) vertical to four (4) horizontal on which fill is to be placed shall be plowed, stepped or benched, or broken up as directed by the Sandia Delegated Representative, in such a manner that the fill material will bond with the existing surface.

C. When surfaces on which fills are to be placed do not meet the specified density requirements, the ground surface shall be broken up, pulverized, and compacted to the specified density.

D. When surfaces on which fills are to be placed do not meet the specified moisture content requirements, the ground shall be wetted, aerated or dried to the specified moisture content.

E. When the subgrade is part fill and part excavation, the excavated portion shall be scarified to a depth of 12 inches and compacted as specified for the adjacent fill.

3.05 FILL

A. Fills and embankments shall be constructed at the locations and to the lines and grades indicated on the Drawings, allowing for surfacing, base courses and topsoil. Topsoil shall be used for the construction of berms.

B. The material shall be placed in successive horizontal layers of 6 inches in loose depth for the full width of the cross section, and compacted.

3.06 COMPACTION

A. For overall and pavement subgrade compaction densities and moisture contents, see Section 02250: Compaction Control and Testing.

B. Compaction shall be accomplished by sheep's-foot rollers, pneumatic-tired rollers, steel-wheeled rollers, or power-driven hand tampers well suited to the soil being compacted. Material shall be aerated or moistened to maintain the required moisture content.

3.07 PAVEMENT SUBGRADE PREPARATION

A. Subgrade Preparation

1. After the subgrade has been shaped to line, grade and cross section it shall be rolled with a power roller until compacted as specified in Section 02250: Compaction Control and Testing. This operation shall include any reshaping, aeration, wetting or drying required to obtain the specified moisture content.

2. All soft or otherwise unsuitable material shall be removed and replaced with suitable material or, if directed by the Sandia Delegated Representative, with spot subgrade reinforcement material. (See Paragraph 3.07.B.)

3. All boulders encountered in the excavation shall be removed to a depth of not less than six (6) inches below the subgrade. The resulting area and all other low sections, holes or depressions shall be brought to the required grade with suitable material or, if directed by the Sandia Delegated Representative, with spot subgrade reinforcement material.

4. Subgrade compaction shall be extended to include the shoulders.

B. Spot Subgrade Reinforcement

1. The use of spot subgrade reinforcement material shall be at the direction of and subject to the approval of the Sandia Delegated Representative.

2. Unsuitable subgrade materials shall be removed, the bottom of the resulting excavation shaped uniformly and compacted firmly to the density specified for subgrade, and required provisions for adequate drainage made.

3. The subgrade reinforcement material shall then be placed in the prepared excavation, in layers of not more than 5 inches, which shall be spread and rammed until level with the surrounding subgrade surface.

4. The voids shall then be filled with necessary finer selected material and the area rolled, or tamped if inaccessible to the roller. The filling and rolling or tamping shall be continued until the entire mass is thoroughly compacted to not less than the density of the surrounding or adjacent areas.

5. The surface shall be finished to conform accurately to the grade and cross section shown on the drawings.

3.08 PLACEMENT OF TOPSOIL

A. Topsoil shall be placed in accordance with Section 02261: Topsoil.

3.09 FINISH GRADING

A. Excavated and filled sections, and adjacent transition areas, shall be uniformly smooth graded. The finished surface shall be reasonably smooth, compacted, and free from irregular surface changes.

B. The degree of finish shall be that ordinarily obtainable from blade-grader operations, except as otherwise specified.

C. The surface of embankments or excavated areas for road construction or other areas to be paved shall not vary more than 0.05 foot from the established grade and cross section.

D. Other finished surfaces shall not vary more than 0.15 foot from the established grade and cross section and shall be free of depressed areas where water would pond.

END OF SECTION

SECTION 02220

STRUCTURAL EXCAVATION AND BACKFILL

PART 1 - GENERAL

1.01 RELATED DOCUMENTS

A. Drawings and general provisions of Contract, including General and Supplementary Conditions and Division-1 Specification sections, apply to work of this section.

1.02 DESCRIPTION

A. This section covers the requirements and procedures for excavation and backfill for structures.

1.03 STANDARD SPECIFICATIONS

A. The following is a list of standard specifications with the accompanying abbreviations used in this specification section:

1. American Association of State Highway and Transportation Officials Standard Specifications - AASHTO.

1.04 QUALITY ASSURANCE

A. Compaction shall be in accordance with Section 02250: Compaction Control and Testing.

B. The Sandia Delegated Representative shall be the sole and final judge of suitability of all materials.

C. Materials in question, pending test results, shall not be used in the work. The Contractor shall remove all materials that fail to meet the requirements of the specifications, whether in stockpiles or in place.

D. Fills, embankments, backfills or subgrades which do not meet the specification requirements shall be removed or recompacted until the requirements are satisfied.

1.05 PROTECTION

A. Protection of Existing Improvements

1. Protection shall be provided to prevent damage to existing improvements indicated to remain in place on Sandia property and adjoining properties.

2. Damaged improvements shall be restored to their original condition, as acceptable to the Sandia Delegated Representative.

3. Land areas outside the limits of permanent work performed under this contract shall be preserved in their present condition. The Contractor shall confine his construction activities to areas defined for work on the Drawings.

B. Protection of Existing Utilities

1. The Contractor shall verify all existing utility locations either shown or not shown on the drawings.

2. The Contractor shall immediately notify the Sandia Delegated Representative of any damages to existing utilities.

3. Repairs to damaged utilities shall be made in accordance with the requirements of the Sandia Delegated Representative at no extra cost to Sandia.

4. The Contractor shall coordinate with the Sandia Delegated Representative for shutoff of or connection to active utilities. Existing utility services shall not be interrupted except as authorized in writing by the Sandia Delegated Representative.

C. Protection of Work Site: Fences or other type protectors shall be provided to prevent unauthorized personnel from entering work sites.

1.06 JOB CONDITIONS

A. Classification of Excavation

1. No classification shall be made to differentiate the various surface and subsurface conditions the Contractor may encounter during his performance under this contract.

2. It is the Contractor's sole responsibility to verify the site surface and subsurface conditions.

B. Dewatering

1. Excavation and embankment shall be performed in such manner that the area of the site and the area immediately surrounding the site will be continually and effectively drained by gravity or temporary pumps.

2. Water shall not be permitted to accumulate in excavations or other areas of the site.

3. The excavation shall be drained by methods which prevent the softening of subgrades and embankments.

C. Blasting shall not be allowed.

D. Shoring

1. Shoring, including sheet piling, shall be furnished and installed as necessary to protect workmen, banks, adjacent paving, structures, and utilities.

2. Shoring, bracing, and sheeting shall be removed as excavations are backfilled, in a manner to prevent caving.

E. Copies of the Geotechnical Report may be obtained from Sandia for interpretation of the site surface and subsurface conditions.

PART 2 - PRODUCTS

2.01 SUITABLE MATERIALS

A. Suitable materials for fill and backfill include materials that are free of debris, roots, organic or frozen materials, stones having a maximum dimension of four (4) inches in the upper six (6) inches of fill or six (6) inches in the remainder of fill.

B. Otherwise suitable material which is unsuitable due to excess moisture content will not be classified as unsuitable material unless it cannot be dried by manipulation, aeration or blending with other materials to the satisfaction of the Sandia Delegated Representative.

C. Unsuitable materials shall include those materials that are determined by the Sandia Delegated Representative to be inadequate for providing a stable slope, fill, subgrade or foundation for structure.

D. Expansive clay soils shall be classified as unsuitable unless treated or mixed in a manner approved by the Sandia Delegated Representative.

2.02 GRANULAR FILL MATERIAL

A. Granular Fill Material shall consist of gravel, crushed gravel or crushed stone and shall conform to the following requirements:

Sieve	Mass-Percent Passing
1 in. (25 mm)	100
3/4 in. (13 mm)	90-100
No. 4	0-10

2.03 SELECTION OF BORROW MATERIAL

A. Borrow material, if required, shall be selected to meet requirements and conditions of the particular fill for which it is to be used.

B. For borrow material obtained outside the limits of the project site, the Contractor shall obtain the right to procure material and shall pay all royalties and other charges involved.

PART 3 - EXECUTION

3.01 EXCAVATION

A. Excavation, regardless of material encountered, shall conform to the dimensions and elevations indicated on the Drawings for each building and structure, and shall include trenching for utility and foundation drainage systems to a point five (5) feet beyond the building line of each building and structure.

B. Excavation shall extend a sufficient distance from walls and footings to allow for placing and removal of forms, installation of services, and for inspection, except where the concrete for walls and footings is authorized by the Sandia Delegated Representative to be deposited directly against excavated surfaces.

C. Suitable excavated material shall be transported to and placed to fill areas within the limits of the work.

D. Unsuitable materials encountered within the limits of the work shall be excavated below grade and replaced with suitable materials as directed by the Sandia Delegated Representative, except that concrete footings shall be increased in thickness to the bottom of the over-depth excavations and over-break in rock excavation.

E. Waste Material

1. No excavated material shall be wasted without the authorization of the Sandia Delegated Representative.

2. Surplus excavated material and unsuitable material shall be disposed of by the Contractor at his own expense and responsibility.

3. Material authorized to be wasted shall be disposed of in such manner as not to obstruct the flow characteristics of any stream or to impair the efficiency or appearance of any structure.

F. No excavated material shall be deposited in a manner that may endanger a partly finished structure by direct pressure or by overloading banks contiguous to the operations or that may otherwise be detrimental to the completed work.

G. Blasting shall not be allowed.

3.02 PREPARATION OF GROUND SURFACE FOR FILL

A. Areas upon which fills are to be placed shall be cleared and grubbed before the fill is started.

B. Sloped ground surfaces steeper than one (1) vertical to four (4) horizontal on which fill is to be placed shall be plowed, stepped or benched, or broken up as directed by the Sandia Delegated Representative, in such a manner that the fill material will bond with the existing surface.

C. When surfaces on which fills are to be placed do not meet the specified density requirements, the ground surface shall be broken up, pulverized, and compacted to the specified density.

D. When surfaces on which fills are to be placed do not meet the specified moisture content requirements, the ground shall be wetted, aerated or dried to the specified moisture content.

E. When the subgrade is part fill and part excavation, the excavated portion shall be scarified to a depth of 12 inches and compacted as specified for the adjacent fill.

3.03 FILL AND BACKFILL

A. Fills and backfills shall conform to the dimensions and elevations indicated on the Drawings for each building and structure.

B. Placing Fill and Backfill

1. Suitable material shall be placed in successive horizontal uniformly spread layers of loose material not more than six (6) inches thick, except that in areas

not accessible or permitted for the use of self-propelled rollers or vibrators, the loose layer shall be four (4) inches thick.

2. Fills and backfills shall not be placed in wet or frozen areas.

C. Backfill

1. Backfill shall not begin until construction below finish grade has been completed, underground utility systems have been inspected and tested, form removed, and the excavation cleaned of trash and debris.

2. Fine aggregate backfill shall be placed to the dimensions and elevations indicated on the Drawings.

3. Heavy equipment for spreading and compacting backfill shall not be operated closer to foundation or retaining walls than a distance equal to the height of backfill above the top of footing; the area remaining shall be compacted by power-driven hand tampers suitable for the material being compacted.

4. Backfill shall be placed carefully around pipes to avoid damage to coatings.

5. Backfill shall not be placed against foundation walls prior to 7 days after placement of the walls.

6. As far as practical, backfill shall be brought up evenly on each side of the wall and sloped to drain away from the wall.

7. Where fill or backfill is to be placed and compacted against structure walls, the walls shall be supported laterally as necessary to prevent damaging or displacing the walls. Any wall so damaged as a result of the Contractor's operation shall be completely and promptly replaced.

3.04 COMPACTION

A. For fill and backfill compaction densities and moisture contents, see Section 02250; Compaction Control and Testing.

B. Compaction shall be accomplished by sheep's-foot rollers, pneumatic-tired rollers, steel-wheeled rollers, or power-driven hand tampers well suited to the soil being compacted. Material shall be aerated or moistened to maintain the required moisture content.

C. Fine aggregate backfill shall be compacted with a minimum of two (2) passes of a power-driven hand tamper.

3.05 GRANULAR FILL

A. Coarse aggregate (granular fill material) shall be installed under slabs-on-grade as indicated on the Drawings.

B. The granular fill material shall be placed directly on the subgrade after the subgrade has been compacted to the required density and placed to the elevation indicated on the Drawings.

C. The fill shall be constructed to the thickness shown in layers not exceeding six (6) inches in compacted thickness.

D. Each layer shall be compacted to the required density with a minimum of two passes of a plate-type vibratory compactor.

3.06 FINISH GRADING

A. Excavated and filled sections, and adjacent transition areas, shall be uniformly smoothly graded. The finished surface shall be reasonably smooth, compacted, and free from irregular surface changes.

B. The degree of finish shall be that ordinarily obtainable from blade-grader operations, except as otherwise specified.

C. The surface of fills or excavated areas for slabs-on-grade shall not vary more than 0.05 foot from the established grade.

D. Other finished surfaces shall not vary more than 0.15 foot from the established grade and cross section and shall be free of depressed areas where water would pond.

END OF SECTION

SECTION 02221

TRENCH EXCAVATION AND BACKFILL

PART 1 - GENERAL

1.01 RELATED DOCUMENTS

A. Drawings and general provisions of Contract, including General and Supplementary Conditions and Division-1 Specification sections, apply to work of this section.

1.02 DESCRIPTION

A. This section covers the requirements and procedures for excavation and backfill relating to underground conduits.

1.03 QUALITY ASSURANCE

A. Compaction shall be in accordance with Specification Section 02250: Compaction Control and Testing.

B. The Sandia Delegated Representative (SDR) shall be the sole and final judge of suitability of all materials.

C. Materials in question, pending test results, shall not be used in the work. The Contractor shall remove all materials that fail to meet the requirements of the specifications, whether in stockpiles or in place.

D. Pipe bedding or trench backfill which does not meet the specification requirements shall be removed or recompacted until the requirements are satisfied.

1.04 PROTECTION

A. Protection of Existing Improvements:

1. Protection shall be provided to prevent damage to existing improvements indicated to remain in place on Sandia property and adjoining properties.

2. Damaged improvements shall be restored to their original condition, as acceptable to parties having jurisdiction.

3. Land areas outside the limits of permanent work performed under this contract shall be preserved in their present condition. The Contractor shall confine his construction activities to areas defined for work on the Drawings.

B. Protection of Existing Utilities:

1. The Contractor shall verify all existing utility locations either shown or not shown on the Drawings.

2. The Contractor shall immediately notify the SDR of any damages to existing utilities.

3. Repairs to damaged utilities shall be made in accordance with the requirements of the SDR at no extra cost to Sandia.

4. The Contractor shall coordinate with the SDR and the applicable utility company for shutoff of or connection to active utilities. Existing utility services shall not be interrupted except as authorized in writing by the SDR.

C. Protection of Work Site: Barricades or other type protectors shall be provided to prevent unauthorized personnel from entering work sites.

1.05 JOB CONDITIONS

A. Classification of Excavation:

1. No classification shall be made to differentiate the various surface and subsurface conditions the Contractor may encounter during his performance under this contract.

2. It is the Contractor's sole responsibility to verify the site surface and subsurface conditions.

B. Dewatering:

1. Trenching shall be performed in such manner that the trench and the area immediately surrounding the trench will be continually and effectively drained by gravity or temporary pumps.

2. Water shall not be permitted to accumulate in trenches.

3. Trenches shall be drained by methods which prevent the softening of the pipe bedding.

C. Shoring:

1. Shoring, including sheet piling, shall be furnished and installed as necessary to protect workers, banks, adjacent paving, structures, and utilities.

2. Shoring, bracing, and sheeting shall be removed as trenches are backfilled, in a manner to prevent caving.

D. Blasting shall not be permitted.

E. Copies of Geotechnical Report may be obtained from Sandia for Contractor's interpretation of site surface and subsurface conditions.

PART 2 - PRODUCTS

2.01 BEDDING MATERIAL

A. Fine Aggregate Bedding:

1. Fine aggregate bedding shall meet the quality and grading requirements of AASHTO M29, Grading No. 1.

2. In general, fine aggregate bedding shall consist of natural sand having hard, strong, durable particles free from deleterious substances and meeting the following gradation requirements:

Sieve Designation	Mass Percent Passing
3/8 in.	100
No. 4	95-100
No. 8	70-100
No. 16	40-80
No. 30	20-65
No. 50	7-40
No. 100	2-20
No. 200	0-10

B. Coarse Aggregate Bedding:

1. In general, coarse aggregate bedding shall consist of a well-graded crushed stone, crushed gravel, or gravel having hard, strong, durable particles free from deleterious substances and meeting the following gradation requirements:

Sieve Designation	Mass Percent Passing
1 in.	100
3/4 in	90-100

3/8 in	25-55
No. 4	0-10
No. 8	0-5

2. Coarse aggregate bedding used for fiberglass pipe shall meet the above requirements, except that 100% of the material shall pass the 3/4 in. sieve.

2.02 BACKFILL MATERIAL

A. Select Soil Backfill

1. Select soil backfill shall be soil or soil aggregate free of debris, roots, organic material, and frozen materials.

   a. Initial backfill (to 12 in. above the top of pipe) shall be free of stones not capable of passing a 1 in. sieve.

   b. The remainder of the backfill shall be free of stones having a maximum dimension of 3 in. or more.

   c. Initial backfill for fiberglass pipe shall be free of stones not passing a 3/4 in. sieve.

2. Otherwise suitable material which is unsuitable due to excess moisture content will not be classified as unsuitable material unless it cannot be dried by manipulation, aeration, or blending with other materials to the satisfaction of the SDR.

3. Unsuitable materials shall include those materials that are determined by the SDR to be inadequate for providing a stable backfill.

4. Expansive clay soils shall be classified as unsuitable unless treated or mixed in a manner approved by the SDR.

2.03 SELECTION OF BORROW MATERIAL

A. Borrow material, if required, shall be selected to meet requirements and conditions of the particular backfill for which it is to be used.

B. For borrow material obtained outside the limits of the project site, the Contractor shall obtain the right to procure material and shall pay all royalties and other charges involved.

2.04 PLASTIC MARKING TAPE

A. Plastic marking tape shall be acid and alkali-resistant polyethylene film, 6 inches wide with minimum thickness of 0.004 inch. Tape shall have a minimum strength of 1750 psi lengthwise and 1500 psi crosswise. The tape shall be manufactured with integral wires, foil backing or other means to enable detection by a metal detector when the tape is buried up to 3 feet deep. The tape shall be of a type specifically manufactured for marking and locating underground utilities. The metallic core of the tape shall be encased in a protective jacket or provided with other means to protect it from corrosion. Tape color shall be as specified below and shall bear a continuous printed inscription describing the specific utility.

Tape Color	Utility
Red:	Electric
Yellow:	Gas, Oil, Dangerous Materials
Orange:	Telephone, Telegraph, Television, Police, and Fire Communications
Blue:	Water Systems
Green:	Sewer Systems

PART 3 - EXECUTION

3.01 TRENCH EXCAVATION

A. Trench excavation, regardless of material encountered, shall be performed to the depths indicated or as otherwise specified.

B. During excavation, material suitable for backfilling shall be piled in an orderly manner a sufficient distance from the banks of the trench to avoid overloading and to prevent slides or cave-ins.

C. Excavated materials not required or suitable for backfill shall be removed and wasted as specified in Section 02210: Site Grading.

D. Excavation shall be made by open cut, with as little trench opened at one time as possible.

E. Trench walls shall be vertical from the bottom of the trench to at least one foot above the top of the pipe. The remainder of the trench shall be excavated such that the walls are at a slope flat enough to prevent collapse of the trench. Shoring shall be used as necessary to protect workers, banks, adjacent paving, structures, and utilities.

F. Trench Width:

1. Trenches shall be wide enough to allow for the proper laying of pipes and conduits. Unless otherwise indicated on the Drawings, the bottom of the trench shall conform to the following (Use horizontal span for arch pipe, elliptical pipe, or other odd-shaped conduits):

Size of Conduit (ID) Internal Diameter or Horizontal Span	Width of Trench (Maximum) Without Sheeting and Shoring	With Sheeting and Shoring
12 in. and Smaller	24 in.	36 in.
15-21 in. Inclusive	ID + 12 in.	ID + 24 in.
24-30 in. Inclusive	ID + 18 in.	ID + 30 in.

2. Where only a small amount of sheeting and shoring is required, which will not interfere with the work, the maximum trench widths shall be the same as where no sheeting and shoring are required.

G. Excavation for manholes, valves, and other appurtenances shall be sufficient to allow a minimum 12 inch clearance around the appurtenance.

H. Wet or otherwise unstable materials encountered in the bottom of the trench shall be overexcavated to allow for construction of a stable pipe bedding. The overexcavation shall be backfilled with coarse aggregate bedding.

I. Blasting shall not be allowed.

3.02 DEPTH OF BURY

A. Unless otherwise indicated on the Drawings, trenches shall be excavated to a depth that will provide not less than the following cover over the top of the pipe or conduit from finished grade:

1. Water Lines - 4 feet
2. Roof Drains and Storm Drains - 2 feet
3. Sanitary Sewers - 3 feet
4. Gas Lines (Low Pressure) - 3 feet
5. Electrical Duct Banks - 3 feet
6. Direct Buried Electrical - 3 feet

B. In addition to the above requirements, trenches shall be excavated to a depth that will avoid interference with other utilities.

3.03 PIPE BEDDING AND TRENCH BACKFILL

A. Bedding

1. Bedding used for pipes and conduits under pavements, driveways, curbs, gutters, steps, equipment slabs, building slabs on grade, and similar use areas shall be defined as first-class situations.

2. Bedding used for pipes and conduits where first-class bedding is not required shall be defined as ordinary situations.

3. Circular Pipes

    a. Bedding: Coarse aggregate bedding shall be placed on the bottom of the trench prior to the installation of the pipe. Fine aggregate bedding shall be used for steel pipe with exterior coating. First class situations shall have a minimum thickness of one-fourth the outside pipe diameter or six (6) inches, whichever is greater. Ordinary situations shall have a minimum thickness of one-eighth the outside pipe diameter or four (4) inches, whichever is greater. Hand or mechanical tamping shall be used to compact the bedding. The surface of the bedding shall be brought to a uniform grade during compaction. Bell holes shall be excavated prior to pipe installation to allow for unobstructed assembly of the joint and to assure that the pipe is fully bedded for its entire length.

    b. Haunching: After the pipe has been installed, coarse aggregate bedding shall be placed to extend up the sides of the pipe to the horizontal centerline. Fine aggregate bedding shall be used for steel pipe with exterior coating. Each lift shall not exceed six (6) inches and shall be compacted by hand. Mechanical tamping may be used except when installing plastic or fiberglass pipe or when use of mechanical tampers is not recommended by the pipe manufacturer. Sufficient material shall be worked under the haunch of the pipe to provide adequate support. Precautions to prevent movement of the pipe during placing of the material under the pipe haunch shall be taken.

B Backfill

1. Initial Backfill

    a. Where first class situations occur, aggregate subbase backfill shall be placed from the top of the coarse aggregate bedding to twelve (12) inches above the top of the pipe or conduit. Where ordinary situations occur, select soil backfill shall be placed from the top of the haunching to six (6) inches above the top of the pipe or conduit. Fine aggregate bedding material shall be used for initial backfill of steel pipe with exterior coating.

    b. Each lift shall not exceed six (6) inches and shall be compacted by hand. Mechanical tamping may be used except when installing plastic or

fiberglass pipe or when use of mechanical tampers is not recommended by the pipe manufacturer.

c. Initial backfill shall be placed simultaneously on both sides of the pipe to prevent displacement.

2. Final Backfill

a. Trenches shall not be backfilled until required pressure tests are performed.

b. Trenches having first-class situations shall be backfilled with aggregate subbase backfill and brought to the subgrade elevation required for surface or base course construction. Trenches having ordinary situations shall be backfilled with select soil backfill and brought to the subgrade elevation required for surface construction or topsoiling.

c. Backfill shall be placed in successive horizontal layers of 8 inches to 12 inches in loose depth for the full width of the trench and compacted.

d. Rolling equipment shall not be used until a minimum of two feet of backfill material has been placed over the top of the pipe. If a hydro hammer is used to compact the backfill, a minimum of three feet of cover is required.

3. Plastic Marking Tape: Warning tapes shall be installed directly above the pipe, at a depth of 18 inches below finished grade unless otherwise shown.

C. Backfill Around Structures and Appurtenances

1. Backfill around manholes, inlets and similar structures shall conform to Section 02220: Structure Excavation and Backfill except that structures located in pavements, driveways, curbs, gutters, steps, equipment slabs, building slabs on grade, and similar use areas shall be backfilled with aggregate subbase backfill.

2. Backfill around fire hydrants, valves, cleanouts, and similar appurtenances shall conform to trench backfill requirements, except as modified on the Drawings.

3.04 COMPACTION

A. For backfill compaction densities and moisture contents, see Section 02250: Compaction Control and Testing.

END OF SECTION

SECTION 02244

CHAIN LINK FENCE AND GATES

PART 1 - GENERAL

1.01 RELATED DOCUMENTS

A. Drawings and general provisions of Contract, including General and Supplementary Conditions and Division-1 Specification sections, apply to work of this section.

1.02 DESCRIPTION

A. This section covers the requirements for chain link fence and gates.

1.03 SUBMITTALS

A. Manufacturer's technical data for steel fence and gates shall be submitted for review and approval.

PART 2 - PRODUCTS

2.01 GENERAL

A. Pipe sizes indicated are commercial pipe sizes.

B. Finish for framework and appurtenances shall be as indicated below:

1. Galvanized finishes shall have not less than the minimum weight of zinc per sq. ft., as indicated.

a. Pipe: ASTM A 120 (1.8 oz. zinc per square foot)

b. Hardware and Accessories: ASTM A 153 (zinc weight in accordance with Table I therein).

2.02 FABRIC

A. Chain link fabric shall be as follows:

1. One-piece fabric widths, for fence heights up to 12'

2. No. 11 ga. (0.148") wires

3. 2" mesh

B. Selvages:

1. Top and bottom selvages twisted and barbed; barbing to be done on a bias, thus creating sharp points.

C. Finish:

1. Galvanized finish with not less than 1.2 oz. zinc per sq. ft., complying with ASTM A 392, Class 1.

2.03 POSTS, RAILS AND BRACES

A. End, corner, and pull posts shall be of the minimum sizes and weights as follows:

1. 3.0" OD pipe weighing 5.79 lbs. per lin. ft.

B. Line posts shall be of the minimum sizes and weights as follows. Posts shall be spaced at 10' o.c. maximum, unless otherwise indicated.

1. 2.5" OD pipe weighing 3.65 lbs. per lin. ft.

C. Gate posts for supporting single gate leaf, or one leaf of a double gate installation shall be as follows:

1. Single to 6' or double to 12' inclusive:

a. 3.0" OD pipe weighing 5.79 lbs. per lin. ft.

2. Single over 6' to 13' or double over 12' to 20' inclusive:

a. 4" OD pipe weighing 9.10 lbs. per lin. ft.

D. Top, bottom, and center rails shall be as follows, unless otherwise indicated:

1. 1.660" OD pipe weighing 2.27 lbs. per lin. ft.

2. Rails shall be in manufacturer's longest lengths, with expansion type couplings, a minimum of 7" long, set at maximum of 20' lengths. Rails shall be securely attached to each gate, corner, pull, and end post.

E. Post Brace Assembly: Bracing assemblies shall be installed at end and gate posts and at both sides of corner and pull posts with the horizontal brace located at mid-height of the fabric with 3/8" diameter rod and turnbuckle for diagonal truss.

F. Barbed wire supporting arms shall be pressed steel, wrought iron, or malleable iron, complete with provision for anchorage to posts and attaching 3 rows of barbed wire to each arm. Supporting arms may either be attached to posts or integral with post top weather cap. The barbed wire supports shall be as follows:

1. Single 45 degree arm, one for each post where indicated

G. Barbed wire shall be 2 strand, 12-1/2 ga. wire with 14 ga., 4-point barbs spaced at 5" o.c., coated as follows:

1. Galvanized, complying with ASTM A 121, Class 3

H. Post tops shall be pressed steel, wrought iron, or malleable iron, designed as a weathertight closure cap (for tubular posts). One cap shall be furnished for each post unless equal protection is afforded by combination post top cap and barbed wire supporting arm, where barbed wire is required. Caps shall have openings to permit passage of the top rail.

I. Stretcher bars shall be one-piece lengths equal to full height of the fabric, with a minimum cross-section of 1/4" x 3/4". Stretcher bars shall be used to attach fabric to corner, gate, and terminal posts. Stretcher bars shall be fastened to posts with five stretcher bar bands per bar. Bands shall be 7/8" wide by 1/8" thick.

2.04 GATES

A. Gate perimeter frames shall be fabricated of tubular members. Additional horizontal and vertical members shall be installed to ensure proper gate operation and to allow attachment of fabric, hardware and accessories. Frame members shall be spaced so they are not more than 8' apart. Gates shall be fabricated of the following:

1. 2.0" OD pipe weighing 2.72 lbs. per lin. ft.

B. Gate frames shall be welded or otherwise connected with special malleable or pressed steel fittings and rivets for rigid connections. The fabric used for the gate shall be the same as for the fence. Fabric shall be attached with stretcher bars at vertical edges. Bars may also be used at top and bottom edges. Stretchers shall be attached to gate frame at not more than 15" o.c. Hardware shall be attached with rivets or by other means that will provide security against removal or breakage.

C. Diagonal cross-bracing consisting of 3/8" diameter adjustable length truss rods shall be installed on gates where necessary to ensure frame rigidity without sag or twist.

1. Where barbed wire is indicated above gates, end members shall be extended to 1'-0" above the top member and prepared to receive 3 strands of wire. Barbed wire shall be attached to the extensions with suitable clips.

D. Gate hardware and accessories shall be as follows:

1. Hinges shall be malleable iron ball and socket type to suit gate size. They shall be the non-lift-off type and offset to permit 180 degrees gate opening. One and one half pair of hinges shall be furnished for each leaf over 6' nominal height.

2. Latch shall be the forked or plunger-bar type to permit operation from either side of the gate, with padlock eye as an integral part of the latch.

3. Gates shall have gate stops. Each stop shall be the mushroom type or flush plate with anchors set in concrete to engage the center drop rod or plunger bar. A locking device and padlock eyes shall be furnished as an integral part of the latch, allowing the use of one padlock for locking both gate leaves.

2.05 MISCELLANEOUS MATERIALS AND ACCESSORIES

A. Wire ties for tying fabric to line posts shall be 11-ga. steel wire spaced 14" o.c. For tying fabric to rails and braces, 11-ga. steel wire ties spaced 24" o.c. shall be used. Finish of ties shall match fabric finish.

B. Concrete shall consist of portland cement complying with ASTM C 150, aggregates complying with ASTM C 33, and clean water. Concrete shall have a minimum 28-day compressive strength of 2,500 psi. Mix shall contain at least 4 sacks of cement per cu. yd., and use a 1" maximum size aggregate. Concrete shall have a maximum 3" slump, and 2% to 4% entrained air.

PART 3 - EXECUTION

3.01 INSTALLATION

A. General: Fence installation and erection shall not begin before the final site grading is completed, with finish elevations established.

B. Excavation: Holes shall be of diameters and spacings shown. In firm, undisturbed or compacted soil, footings shall be 10" in diameter for line posts and 1'-4" for end posts, gate posts and brace posts.

C. Unless otherwise indicated, in firm undisturbed soil, hole depths shall be excavated to approximately 4" lower than the post bottom, with bottom of posts set not less than 36" below the surface. Excess soil from excavations shall be spread uniformly adjacent to the fence line or on adjacent areas of the site, as directed.

D. Setting Posts:

1. Loose and foreign materials shall be removed from sides and bottoms of holes. Soil shall be moistened prior to placing concrete.

2. Posts shall be centered and aligned in holes 4" above bottom of excavation.

3. Concrete shall be placed around posts in a continuous pour, and vibrated or tamped for consolidation. Each post shall be checked for vertical and top alignment, corrected to its proper position, and held in position during placement and finishing operations.

4. Trowel finish tops of footings, and slope or dome to direct water away from posts. Extend footings for gate posts to the underside of bottom hinge. Set keeps, stops, sleeves and other accessories into concrete as required.

5. Concrete surfaces shall be kept moist for at least 7 days after placement, or cured with membrane curing materials or other acceptable curing method.

6. Concrete Strength: Concrete shall attain at least 75% of its minimum 28-day compressive strength before rails, tension wires, barbed wire, or fabric is installed. Stretching and tensioning of fabric and wires, and hanging of gates shall not be done until the concrete has attained its full design strength.

E. Top rails shall run continuously through post caps or extension arms, bending to radius for curved runs.

F. Center rails shall be installed only where shown on the drawings. They shall be installed in one piece between posts and flush with post on fabric side, using special offset fittings where necessary.

G. Brace assemblies shall be installed so posts are plumb when diagonal rod is under proper tension.

H. Approximately 2" clear shall be left between finish grade and bottom rail. Fabric shall touch the ground. Fabric shall be pulled taut and tied to posts, rails, and tension wires. Fabric shall be installed on security side of fence, and anchored to framework so that fabric remains in tension after pulling force is released. Fabric shall be installed with the barbs up.

I. Damaged coatings shall be repaired in the shop or during field erection by recoating with manufacturer's recommended repair compound, and applied in accordance with manufacturer's instructions.

J. Stretcher bars shall be threaded through the fabric and secured to posts with metal bands spaced 15" o.c.

K. Gates shall be installed plumb, level, and secure for full opening without interference. Ground-set items shall be installed in concrete for anchorage, as recommended by the fence manufacturer. Hardware shall be adjusted for smooth operation and lubricated where necessary.

L. Steel tie wires shall be U-shaped, conforming to the diameter of the pipe to which attached and shall clasp pipe and fabric firmly with ends twisted at least 2 full turns.

M Fasteners: Hardware for tension bands shall be installed so the nuts are on the inside of the fence. Ends of bolts shall be peened or threads scored to prevent removal of nuts.

END OF SECTION

SECTION 02250

COMPACTION CONTROL AND TESTING

PART 1 - GENERAL

1.01 RELATED DOCUMENTS

A. Drawings and general provisions of Contract, including General and Supplementary Conditions and Division-1 Specification sections, apply to work of this section.

1.02 DESCRIPTION

A. This section covers the requirements and procedures for compaction control and testing of soils and base courses.

1.03 DEFINITIONS

A. Cohesionless Materials

1. Cohesionless materials shall be clean, free-draining, variously graded gravels and sands with little or no fines. The portion passing the No. 200 sieve shall be limited to 12% and shall have a plasticity index of 0.

2. Cohesionless materials shall be classified according to ASTM D 2487 as GW, GP, SW or SP.

B. Cohesive Materials

1. Cohesive materials shall be classified according to ASTM D 2487 as GM, GC, SM, SC, CL and CH.

2. Materials classified according to ASTM D 2487 as ML, OL, MH, OH and PT shall be unsatisfactory.

1.04 QUALITY ASSURANCE

A. Test Specifications

1. Laboratory Tests

a. Moisture - density relations of soils (compaction test) - AASHTO T 99, Method C or D

b. Liquid limit of soils - AASHTO T 89

c. Plastic limit and plasticity index of soils - AASHTO T 90

d. Particle size analysis of soils (gradation test) - AASHTO T 88

2. Field Tests

a. Density of soil in-place by the rubber-balloon method - AASHTO T 205

b. Determination of moisture in soils by means of a calcium carbide gas pressure moisture tester - AASHTO T 217

c. Density of soil and soil aggregate in-place by nuclear methods - AASHTO T 238, Method B (direct transmission)

B. Laboratory Tests Required

1. The following tests shall be performed for each principal type of material or combination of materials encountered or utilized.

a. Compaction test

b. Liquid limit test

c. Plastic limit test (and determination of plasticity index)

d. Gradation test

2. The tests listed above shall be performed on additional samples as directed by the Sandia Delegated Representative.

3. Results of these tests shall be the basis of control for compaction.

C. Field Tests Required

1. Structure Excavation, Filling and Backfilling

a. One (1) in-place density test and one (1) in-place moisture test per 600 square yards per lift, but no more than 10 tests per lift

b. One (1) in-place density test and one (1) in-place moisture test per 600 square yards per lift in subareas enclosed by interior grade beams or interior stem walls prior to placement of fill, but not less than one (1) per lift

c. In-place density and moisture tests within the structure (a) may be utilized as the in-place density and moisture tests indicated in (b) if they happen to coincide within the subarea.

2. Trench Excavation and Backfilling

a. One (1) in-place density test and one (1) in-place moisture test per 100 linear feet of trench per lift under structures and paved areas

b. One (1) in-place density test and one (1) in-place moisture test per 300 linear feet of trench per lift under grassed or nontraffic areas

3. Site Grading:

a. Excavation, filling and raw subgrade and base course preparation under paved areas: One (1) in-place density test and one (1) in-place moisture test per 2,000 square yards per lift.

b. Excavation, filling and raw subgrade preparation under grassed or nontraffic areas: One (1) in-place density test and one (1) in-place moisture test per 3,000 square yards per lift

c. Nuclear methods for determining in-place density may be used for only 80% of the required tests. The remaining tests shall be correlation check tests of the nuclear test results by use of the rubber-ballon method.

d. Additional in-place moisture-density tests and relative density tests shall be performed as directed by the Sandia Delegated Representative.

D. Samples for laboratory and field tests shall be taken at locations designated by the Sandia Delegated Representative.

PART 2 - PRODUCTS

Not applicable

PART 3 - EXECUTION

3.01 COMPACTION

A. Each lift shall be compacted to not less than the percentage of maximum density specified below as determined by ASTM D 1557.

Fill Location	Minimum compaction (percent)

Inside Building Area	90
Outside Building Area	90
Trench Backfill	90
Pavement Subgrade	95
Aggregate Base	95

B. Moisture Content

1. Each lift of fill, embankment, backfill and trench backfill under pavement, driveways, curbs, gutters, steps, sidewalks, grassed or landscaped areas, and similar use areas (including adjacent shoulder areas) shall be compacted at a moisture content at or above optimum moisture.

2. Each lift of fill, embankment, backfill and trench backfill under equipment slabs, building slabs-on-grade, and other structures shall be compacted at a moisture content at or above optimum moisture.

3. Subgrades shall be compacted at a moisture content at or above optimum moisture.

3.02 COMPACTION DEFICIENCIES

A. The Sandia Delegated Representative shall be the final judge of suitability of all compaction.

B. Apparent negligence or carelessness during any portion of the earthwork operations will require that additional tests be performed on that portion of the work.

C. Fills, embankments, backfills, trench backfills, subgrades or base courses that do not meet the specification requirements shall be removed or recompacted until the requirements are satisfied.

END OF SECTION

SECTION 02261

TOPSOIL

PART 1 - GENERAL

1.01 RELATED DOCUMENTS

A. Drawings and general provisions of Contract, including General and Supplementary Conditions and Divisions-1 Specifications, apply to work of this section.

1.02 DESCRIPTION

A. This section covers the requirements for topsoil selection and application.

1.03 QUALITY ASSURANCE

A. The Sandia Delegated Representative shall be the sole and final judge of suitability of topsoil.

1.04 PROTECTION

A. Protection shall be provided to prevent damage to improvements on the Sandia property and adjoining properties.

B. Damaged improvements shall be restored to their original condition.

1.05 SUBMITTALS

A. The contractor shall submit two standard soil analysis reports as specified in Section 2.01D below.

PART 2 - PRODUCTS

2.01 SUITABLE TOPSOIL

A. Fertile, friable, natural productive soil containing a normal amount of humus, capable of sustaining healthy plant life, free of subsoil, heavy or stiff clay, rocks, gravel, brush, roots, weeds, noxious seeds, sticks, trash, and other deleterious substances. Obtain soil from well-drained, arable land, and of an even texture and

not from areas on which are growing any noxious weeds such as Morning Glory, Sorrel, or Bermuda Grass.

B. Grading: Sandy loam per USDA 7th approximation classification method. All sandy loam must pass through a one-inch sieve with 85% sand fraction falling within the medium to fine sand range.

C. Topsoil Source: Stockpiled topsoil from the project site may be used, provided it meets all criteria described above. Any additional topsoil required may be imported from an approved source. Provide the site of the source of supply of imported topsoil available to the Sandia Delegated Representative for observation and approval prior to any hauling or placing of soil and within four weeks from the time of award of contract. Submit sample, analysis, source of supply and guarantee of quantity available.

D. Sample the soil and deliver it to two accredited soil laboratories for a standard soil analysis and report at no cost to Sandia. Report to include fertility, agricultural suitability, particle size distribution of the soil, silt and clay content, ph, boron, together with the recommendations of a soils analyst. Deliver the sample analysis to the Sandia Delegated Representative. Following approval of the sample, provide a one-half cubic yard sample and store at the site of work for comparison with subsequent loads of soil. Protect the comparison sample by a cover until the furnishing of all soil has been completed and accepted. Should the soil submittal lack certain requirements which can be added to the soil, the Sandia Delegated Representative will consider a request by the Contractor to amend the soil as recommended by the Soils Analyst at the Contractor's expense.

E. Transport topsoil directly from the source to final position unless approved by Sandia Delegated Representative to be placed in stockpiles. If amendments are required mix in an approved manner prior to placing on site. If stockpiling is approved, the locations and amount of the stockpiles will be designated by Sandia Delegated Representative.

PART 3 - EXECUTION

3.01 CONSERVATION OF TOPSOIL

A. Suitable topsoil shall be stripped from areas to be excavated and areas where fill will be placed immediately before grading operations in that area begin.

B. Topsoil shall be stockpiled as directed by the Sandia Delegated Representative for future placement in the work.

C. Sufficient topsoil shall be conserved to cover to a depth of four (4) inches all areas to be disturbed except areas to be paved or similarly surfaced.

3.02 TOPSOIL PLACING

A. Prior to placing topsoil, vegetation on the areas receiving the topsoil shall be removed and the ground surface cleared of all other materials that would hinder proper grading, tillage or subsequent maintenance operations.

B. Previously constructed grades shall be repaired if necessary so that the areas receiving the topsoil shall conform to the lines and grades indicated on the Drawings.

C. Areas receiving the topsoil shall be thoroughly scarified to a depth of at least three (3) inches, unless, by reason of drought, excessive moisture or other factors, satisfactory results are not likely to be obtained.

D. Topsoil shall be uniformly distributed and evenly spread to a minimum thickness of four (4) inches after settling. Spreading shall be performed in such a manner that planting can proceed with little additional soil preparation or tillage.

E. The finished surface shall not vary more than 0.10 foot from the established grade and cross section and shall be free of depressed areas where water would pond.

F. Topsoil shall not be placed when the subgrade is frozen, excessively wet, extremely dry, or in a condition otherwise detrimental to proper grading or the proposed planting.

END OF SECTION

SECTION 02350

DRILLED PIERS

PART 1 - GENERAL

1.01 RELATED DOCUMENTS

A. Drawings and general provisions of Contract, including General and Supplementary Conditions and Division-1 Specification sections, apply to work of this section.

1.02 DESCRIPTION

A. This section covers the requirements and procedures for the installation of drilled piers.

B Definitions:

1. Diameter: Diameter of drilling bucket or auger bit or inside diameter of casing without oversize of hole.

2. Length: Total length of drilled pier from bottom of wall, grade beam or pier cap to bottom of hole as drilled.

C. Reference Standards: Published specifications, standards, tests, or recommended methods of trade, industry or governmental organizations apply to work of this Section where cited by abbreviations noted below (latest editions apply).

1. American Society of Testing and Materials (ASTM).

2. American Concrete Institute's "Specifications for Structural Concrete for Buildings" (ACI 301).

1.02 QUALITY ASSURANCE

A. Codes: Drilled pier shall be in compliance with the applicable requirements of governing authorities having jurisdiction, including provisions for adequate protections to persons and property.

B. A California registered land surveyor or civil engineer shall be engaged to perform surveys, layouts, and measurements for drilled pier work, to conduct layout work for each pier to lines and levels required before excavation, to determine actual measurements of each drilled pier's horizontal axial location,

shaft diameter, bottom and top elevations, deviations from specified tolerances, and to determine other data as required.

C. Submittals:

1. Samples: Samples of Materials, Certificates of Compliance, Mix Designs: See Section 03200 - Reinforcing Steel, and Specification Section 03300 - Cast-in-Place Concrete for complete listing.

2. Reports:

a. At completion of work, written report for each pier drilled giving location, actual lengths, date of drilling and pouring concrete, and other pertinent data.

b. Daily worksheet containing same information as above.

PART 2 - PRODUCTS

2.01 EQUIPMENT

A. Equipment used in the performance of the work shall be of a type to satisfactorily perform the work required. Equipment shall be subject to the approval of the Sandia Delegated Representative and shall be maintained in a satisfactory working condition at all times.

2.02 CONCRETE AND RELATED MATERIALS

A. Concrete and related materials shall be as specified in Specification Section 03300: Cast-in-Place Concrete and meet the requirements as herein specified.

B. Rebar per Specification Specification Section 03200.

PART 3 - EXECUTION

3.01 DRILLED PIER EXCAVATION

A. General:

1. Schedule and coordinate work so that drilling, inspection, and placement of reinforcement and concrete shall be continuous operation on single shift basis.

2. Perform field engineering and layout work, including furnishing necessary centerlines, offsets, and grade stakes required for piers.

3. Locate existing underground utilities by careful hand excavation before starting drilled pier excavation operations. If utilities are to remain in place, provide protection from damage during drilled pier operations. Should uncharted or incorrectly charted piping or other utilities be encountered during excavation, consult the Sandia Delegated Representative before proceeding. Cooperate with Sandia National Laboratories, in keeping their services and facilities in operation. Repair damaged utilities to satisfaction of the Sandia Delegated Representatives.

4. Do not interrupt existing utilities serving facilities occupied and used by Sandia National Laboratories or others, except when permitted in writing by the Sandia Delegated Representative and then only after acceptable temporary utility services have been provided.

5. Excavate holes for drilled piers to the required bearing strata as shown on the drawings. Excavate holes for less than 12 feet spaced drilled piers, and those occurring in fragile or sand strata, only after adjacent holes are filled with concrete and allowed to set.

6. Shafts shall be drilled to the diameter and depth required by the drawings. Full length steel casings shall be installed in those portions of shafts which are drilled through unstable overburden material to prevent cave-ins and displacement of earth. At the option of the Contractor, in lieu of leaving steel casing in the holes, the casing may be withdrawn during placing of concrete provided the top of the concrete is kept constantly at a level above the bottom of the casing as the casing is being withdrawn. Casing shall be watertight and of sufficient thickness to withstand compressive, displacement and withdrawal stresses and to maintain the shaft wall. Contractor shall include the cost of casings in the basic bid.

B. Allowable Tolerances:

1. Locate the centerline of drilled piers to be on the centerline of bearing construction, unless otherwise shown on the drawings.

2. Do not exceed the following tolerances:

   a. Pier shaft excavation diameter shall be within a zero to plus 2-inch tolerance of that shown.

   b. Shaft Centerline Location 1-1/2" maximum variation.

   c. Shaft variation to true line of direction: 1" to 10' for full depth.

3. If above tolerances are exceeded, provide additional or corrective construction, acceptable to the Sandia Delegated Representative to

compensate for the excessive eccentricity. Submit the proposed corrective construction methods to the Sandia Delegated Representative for review before proceeding.

C. Dewatering:

1. Provide and maintain pumping equipment to keep the excavation free of water before placing concrete. If excessive water is encountered and drilling operations must be halted, notify and receive approval from the Sandia Delegated Representative before using alternate methods of construction.

2. Conduct water to general site run-off ditches and disposal areas with sufficient discharge lines. Provide additional ditching as required to connect water to site drainage facilities.

3.02 REINFORCING STEEL AND DOWELS

A. Obtain the Sandia Delegated Representative's approval prior to placing reinforcing.

B. Guide reinforcing cage to prevent contact with sidewall of pier hole.

C. Hang reinforcing cage from firm supports from top and maintain in centered position during concrete placement.

D. Use templates to set anchor bolts, leveling plates and other accessories furnished under work of other sections. Provide blocking and holding devices to maintain required position during concrete placement.

E. Protect exposed ends of dowels and anchor bolts from mechanical damage and exposure to the weather.

3.03 CONCRETE PLACEMENT

A. General:

1. Drilling shall be coordinated with placing of concrete so that no completed hole is left unplaced for longer than absolutely necessary and in no case overnight.

2. Fill drilled piers with concrete immediately after inspection and approval by the Sandia Delegated Representative and acceptance by the Sandia Delegated Representative. Use protection sheets (cut out to receive concrete) over excavation openings, extending at least 12" beyond edge in all directions.

3. Place concrete continuously without interruption and in a smooth flow without segregating the mixed materials. Provide mechanical vibration for consolidation of at least the top 25 ft. of each shaft.

4. Place concrete by means of a bottom discharge bucket, or flexible drop chute, elephant truck hopper, or tremie. Provide runways and other means for conveying concrete to placement locations. Use chutes or tremies for placing concrete where a drop of more than 6' is required, or pump concrete into place.

5. Water that flows into the excavation shall be continually pumped to prevent accumulation in the excavation and all water shall be removed prior to placing of the concrete.

6. Take care to maintain a sufficient head of concrete to prevent reduction in diameter of the drilled pier shaft by earth pressure and to prevent extraneous material from mixing with the fresh concrete.

7. Stop the concrete placement at the cut-off elevation shown, screed off true and level, and apply a scoured, rough finish, unless otherwise shown. Where cut-off elevation is above ground elevation, form the top section above grade and extend the shaft to the required elevation.

3.04 FIELD QUALITY CONTROL

A. The Geotechnical Engineer will inspect and control drilling of piers.

B. Concrete shall be sampled and tested for quality control as specified in Section 03300: Cast-in-Place Concrete.

C. The Sandia Delegated Representative will continuously observe placement of reinforcement and concrete.

D. Controls will consist of all tests and inspections deemed necessary to insure compliance with Specifications.

1. Any work done without inspection is subject to rejection.

E The test laboratory shall keep accurate records of pier depths and any unusual or unforeseen materials encountered while drilling and shall furnish the Sandia Delegated Representative with a copy of such records upon completion of drilling operations.

END OF SECTION

SECTION 02430

INLETS AND HEADWALLS

PART 1 - GENERAL

1.01 RELATED DOCUMENTS

A. Drawings and general provisions of Contract, including General and Supplementary Conditions and Division-1 Specification sections, apply to work of this section.

1.02 DESCRIPTION

A. This section covers the requirements for the installation of inlets and headwalls.

1.03 SUBMITTALS

A. The Contractor shall submit manufacturer's specifications, dimensions and other data for the following:

1. Cast iron curb inlet, frame and grate (galvanized).

2. Area inlet grate (galvanized).

3. Drop inlet grate (galvanized).

PART 2 - PRODUCTS

2.01 PORTLAND CEMENT CONCRETE

A. Portland cement concrete for cast-in-place concrete shall conform to Section 03300: Cast-in-Place Concrete.

2.02 REINFORCING STEEL

A. Deformed billet-steel bars for concrete reinforcement shall conform to AASHTO M 31, Grade 60.

2.03 CASTINGS

A. Gray iron castings shall conform to AASHTO M 105. Castings shall be equal to or better than Class 30B.

B. Castings shall be free from pouring faults, sponginess, cracks, blowholes, and other defects, shall be filleted at angles, and the arrises shall be sharp and true. Castings shall be free from warp and shall be true to the shape and dimension required. Grates fitting into frames shall fit properly, and seat uniformly and solidly.

2.04 STRUCTURAL STEEL

A. Structural steel for drainage grates shall conform to AASHTO M 183.

2.05 BOLTS

A. Bolts, nuts and washers shall conform to AASHTO M 164 and shall be galvanized.

PART 3 - EXECUTION

3.01 FORMS

A. Forms shall be built true to line and grade and braced in a substantial and unyielding manner as specified in Section 03100: Concrete Formwork.

B. Corners, except at tops of footings or bases, shall be chamfered.

3.02 PLACING CONCRETE AND REINFORCING STEEL

A. Concrete and reinforcing steel shall be placed as specified in Section 03200: Concrete Reinforcement and Section 03300: Cast-in-Place Concrete, except as described below.

B. Concrete shall be placed in horizontal layers no more than 12 inches thick. Back layer shall be placed and compacted before the preceding batch has taken initial set.

C. To avoid visible joints as far as possible upon exposed faces, the top surface of the concrete adjacent to the forms shall be smoothed with a trowel.

D. Where a "feather edge" might be produced at a construction joint, as in the sloped top surface of a wingwall, inset form work shall be used to produce a locked out

portion in the preceding layer which shall produce an edge thickness of not less than 6 inches in the succeeding layer.

E. Work shall not be discontinued within 18 inches of the top of any face.

F. Base slabs or footings shall be placed and allowed to set before the walls are constructed. Provisions shall be made for bonding the walls to the base slab or footing by means of raised longitudinal keys so constructed as to prevent the percolation of water through the construction joint.

3.03 CURING OF CONCRETE

A. Side forms may be left in place for at least 3 days to achieve proper curing.

B. Surfaces that side forms are removed from before the 3 days have elapsed and surfaces that are not formed shall be covered and cured in accordance with one of the methods below:

1. The surface shall be entirely covered with burlap mats, the mats weighted down, and the covering shall be maintained fully wetted and in position for 72 hours.

2. The surface shall be entirely covered with waterproof paper, the paper being sufficiently weighted down. The covering shall be maintained in place for 72 hours.

3. The surface shall be entirely covered with white opaque polyethylene film sufficiently weighted down. The sheeting shall be maintained in place for 72 hours.

3.04 CONCRETE FINISHING

A. Concrete surface shall be finished with a paint type spray finish to produce a uniformly textured and colored coat.

B. The spray finish shall be applied at a rate of 45 (+ 5) square feet per gallon with heavy duty spray equipment.

3.05 GALVANIZING

A. Grates for area inlets and drop inlets shall be galvanized prior to installation.

3.06 SETTING FRAMES AND GRATES

A. Frames and grates shall be accurately and carefully placed to the exact grade required.

B. Frames and grates shall have a full bearing and shall be level.

END OF SECTION

SECTION 02485

TURF

PART 1 - GENERAL

1.01 RELATED DOCUMENTS

A. Drawings and general provisions of Contract, including General and Supplementary Conditions and Divisions-1 Specifications, apply to work of this section.

1.02 DESCRIPTION OF WORK

A. Work shall include (but not be limited to) all labor, materials, equipment, and services required for the installation and establishment of solid sod and seeding in accordance with these specifications and applicable drawings.

1.03 QUALITY ASSURANCE

A. Sandia Delegated Representative reserves the right to examine sod and seed materials either at the place of growth, or at the site prior to planting, to assume compliance with specifications for name, variety, and quality. Such examination does not preclude the right to reject materials at the project site due to damage in transit.

1.04 SUBMITTALS

A. A seed vendor's certified statement shall be submitted for each seed mixture required, stating botanical and common name, percentages or purity, germination, and weed seed for each grass seed species. Sod shall also be certified.

1.05 DELIVERY, STORAGE AND HANDLING

A. Packaged materials shall be delivered in containers showing the weight, analysis and name of manufacturer. Materials shall be protected from deterioration during delivery, and while stored at the site.

B. Sod shall be protected from any drying, freezing or contamination by detrimental material.

C. Sod shall not be dropped or dumped from vehicles.

D. Materials shall be stored in areas designated or as approved by the Sandia Delegated Representative.

1.06 PROTECTION OF SEEDED AREAS

A. Seeded areas shall be protected from damage or disturbance after planting operations are complete.

B. Damage resulting from erosion, gulleys, washouts, or other causes shall be repaired by filling with topsoil, tamping, refertilizing, and reseeding by the Contractor at his expense, if such damage occurs prior to acceptance of the project.

1.07 PLANTING SEASON

A. Submit proposed planting schedule for Fescue/Bluegrass mixture for approval by Sandia Delegated Representative.

B. For native seed mixture in non-irrigated areas, planting is to be done between October 1 and January 31, or as otherwise approved by the Sandia Delegated Representative.

PART 2 - PRODUCTS

2.01 TURF MATERIALS

A. Seed shall be fresh, clean, new-crop seed complying with the tolerance for purity and germination established by the Official Seed Analysts of North America.

B. Labels shall be worded to show the percentage by weight of each ingredient in the mixture.

C. Turf seed for irrigated areas shall be at least 98% pure, weed-free mixture and a minimum of 85% germination, recleaned, Grade A "new crop" seed, delivered in the original containers, unopened, and bearing a guaranteed analysis and dealer's label. Mixture as follows:

1. 90% Olympia Tall Fescue

2. 10% Columbia Kentucky Blue Grass

D. Native seed mixture for non-irrigated areas:

1. 85% Blando Bromegrass

2. 15% Crimson Clover

E. Sod shall be sand base rooting material, 90% Olympia Tall Fescue, 10% Columbia Kentucky Blue Grass, Tru Turf, Watsonville, CA, phone 408/722-9986.

2.02 FERTILIZERS

A. Commercial fertilizer in pelleted or granular form, conforming to the requirements of Chapter 7, Article 2, of the Agricultural Code of the State of California for fertilizing materials as follows:

1. Type A: 6% nitrogen, 20% phosphoric acid, and 20% potash (6-20-20).

B. If commercial fertilizer having this analysis is not obtainable, other similar commercial fertilizer may be used providing it meets the approval of the Sandia Delegated Representative.

C. Submit all fertilizer delivery tags to the Sandia Delegated Representative for approval prior to incorporation.

2.03 SOIL AMENDMENTS

A. Lime - Lime shall be raw ground limestone containing not less than 90% total calcium carbonates, 98% passing a 20 mesh sieve and 50% passing a 100 mesh sieve.

2.04 TOPSOIL

A. Refer to Specification Section 02261 TOPSOIL for topsoil requirements.

PART 3 - EXECUTION

3.01 SOIL PREPARATION

A. Topsoil Placement: All disturbed areas not covered by paving or buildings are to have a 4 inch deep layer of topsoil. Refer to Specification Sections 02261 TOPSOIL and 02210-SITE GRADING.

B. Thoroughly wet down the turf areas and confirm sprinkler coverage and operation. Allow soil to dry so as to be workable.

C. Drag to a smooth, even surface. Rake all areas to remove rocks 1-1/2" or larger in size, sticks, and debris. Grade to form all swales, pitch to catch basins, streets, curbs, etc., to insure proper surface drainage.

D. Hold finish ground surface in sod areas 1-1/2 inches below adjacent pavement surfaces, tops of curbs, manholes, etc.

E. Spread Type A fertilizer evenly over all turf areas, after the initial ripping and breakdown of the large clods, at the following rates:

1. Fertilizer: Type A (6-20-20) at 2 lbs. per 100 SF.

F. Rototill above additives into soil 6" to 8" deep.

G. After the rototill work, float areas to a smooth, uniform grade as indicated on the drawings. Slope all turf areas to drain. Roll, scarify, rake, and level as necessary to obtain true, even planting surfaces. Secure approval of the grade by the Sandia Delegated Representative before any seeding or sodding.

H. Prior to seeding or laying sod, water all areas thoroughly to the point of saturation to produce weed growth. Apply "Roundup" herbicide to kill all growth, and proceed with seed or sod installation after period recommended by herbicide manufacturer.

I. Scarify all turf areas that become compacted prior to seeding or sodding.

3.02 PLANTING SEED

A. Light roll surface and reshape to level humps and hollows. Secure the Sandia Delegated Representative's approval before seeding.

B. Seed application: Use an approved seeder, sowing one-half of the amount in one direction and the remaining one-half in a direction 90° to the first during a windless period.

C. Seeding Rates:

1. Fescue/Bluegrass Mixture: 5 lbs./1,000 S.F.

2. Bromegrass/Clover Mixture: 2.5 lbs./1,000 S.F.

D. Rake lightly to cover seed.

E. Wet seeded areas slowly but thoroughly, and keep moist but not saturated at all times until the grass is up.

F. Protect turf areas by erecting fences, barriers, and signs necessary to prevent trespass. Barriers must be neat and well-maintained.

3.03 LAYING SOD

A. Smooth all surfaces to be sodded. Roll area level and smooth before laying sod. Water soil thoroughly and allow to dry partially for sodding.

B. Lay first strip of sod slabs along a straight line (use a string in irregular areas). Butt joints tightly, do not overlap edges. On second strip, stagger joints. Use a sharp knife to cut sod to fit curves, edges, sprinkler heads, etc.

C. Do not lay all sod before watering! When a conveniently large area has been sodded, water sufficiently to prevent drying. The warmer and dryer the weather, the greater the need for this fast initial watering. Continue to sod, and to water until installation is complete.

D. After laying all sod, roll lightly to eliminate irregularities and to form good contact between sod and soil. A very heavy roller or excessive initial watering may cause roller marks, and should be avoided.

3.04 WATERING

A. Immediately the seeded areas shall be given one watering.

B. Sufficient water shall be applied to penetrate the seedbed to a depth of two (2) inches.

C. Watering shall be done in a manner which will provide uniform coverage but which will not cause erosion or damage to the finished surface.

D. Thoroughly water the completed sod surface to at least 8 inches deep. Repeat sprinkling at regular intervals to keep sod moist at all times until rooted. The first 10 days after installation are critical. After sod is established, decrease frequency and increase amount of water per application to maintain optimum growth.

3.05 ESTABLISHMENT OF TURF AND MAINTENANCE

A. Days of planting establish maintenance required: 90 calendar days after planting installation approval for all irrigated sod and seeded areas (minimum).

B. Turf establish maintenance shall follow immediately, coincide with, and be continuous with the planting operation and after all planting is complete and accepted, or longer where necessary to establish acceptable stands of turf.

C. Protect all areas against damage, including erosion and trespass, and provide proper safeguards. Maintain and keep all temporary barriers erected to prevent trespass.

D. Keep all walks and paved areas clean. Keep the site clear of debris resulting from landscape work or maintenance.

E. Repair all damaged turf areas, and replace sod and reseed turf immediately upon discovery of damage or loss.

F. Check sprinkler systems at each water; adjust coverage and clean heads immediately. Adjust timing of sprinkler controller to prevent flooding.

G. Check all barriers and temporary fencing daily, and repair or replace immediately.

H. Establish an even, thick, vigorous stand of grass with no bare spots in seeded areas larger than 1 inch diameter.

I. Mow lawns when at a maximum of 3 inches to a height of 2 inches.

J. Reseed or resod all eroded areas and continue establishment until final acceptance.

K. Maintenance during establishment period shall also include edging and fertilizing.

3.06 FINAL ACCEPTANCE

A. Final review for acceptance shall be made at the conclusion of the planting establishment period. On such date, all project improvements and all corrective work shall have been completed. If all project improvements and corrective work are not completed, then the turf establishment shall continue, at no additional cost to Sandia, until all work has been completed. This condition will be waived by the Sandia Contracting Representative under such circumstances wherein the Sandia Contracting Representative has granted an extension of time to permit the completion of a particular portion of the work beyond the time of completion set forth in the agreement.

B. Written notice requesting review shall be submitted at least 10 days before the anticipated date.

C. Prior to being considered ready for review, the contractor shall have done a final weeding and lawn shall be neatly mowed and edged, and the job cleared of all debris and presented in a neat, orderly fashion.

3.07 GUARANTEE

A. Guarantee all turf to be in a healthy thriving condition until the end of the maintenance period. Contractor shall replace without cost to Sandia all lawn areas not acceptable.

END OF SECTION

SECTION 02490

TREES, SHRUBS, AND GROUNDCOVER

PART 1 - GENERAL

1.01 RELATED DOCUMENTS

A. Drawings and general provisions of Contract, including General and Supplementary Conditions and Divisions-1 Specifications, apply to work of this section.

1.02 SCOPE OF WORK

A. Work shall include (but not be limited to) all labor, materials, equipment, tools, transportation, and services required for complete installation of plant materials and related landscape items as indicated or reasonably implied on the drawings and/or specified herein.

1.03 QUALITY ASSURANCE:

A. Sandia Delegated Representative reserves the right to examine plant materials either at the place of growth, or at the site prior to planting, to assure compliance with specifications for name, variety, size, and quality. Such examination does not preclude right to reject materials at the project site due to damage in transit. The Sandia Delegated Representative shall have the option to select and tag any or all plants at the nursery prior to delivery to the job site.

1.04 APPLICABLE PUBLICATIONS:

A. The following publications of the issues listed below form a part of this specification to the extent referenced to:

1. American National Standards Institute (ANSI) Publications: Z60.1-1973 Nursery Stock

2. American Association of Nurserymen, Inc. American Standard for Nursery Stock

1.05 JOB CONDITIONS:

A. Proceed with and complete landscape installation as rapidly as portions of the site become available, working within seasonal limitations.

B. Contractor shall assume responsibility for locating all site utility systems, including existing irrigation, and perform work in a manner which will avoid damage. Hand excavate, as required.

C. When unforeseen conditions detrimental to plant growth are encountered, notify Sandia Delegated Representative before planting.

PART 2 - PRODUCTS

2.01 PLANT MATERIALS

A. Plant list: The contractor shall furnish and plant all plants shown on the drawings, as specified, and in quantities listed on the plant materials list. If discrepancies exist between the count of plant materials as shown on drawings, and as listed on the plant materials list, the actual count on drawings shall be considered correct.

B. All plants shall conform to the species, variety, condition, and sizes specified in the plant materials list. Substitutions shall be allowed only where alternate plant materials are specified on drawings, or as approved by the Sandia Delegated Representative.

C. Quality and Size:

1. Plants shall have a growth habit that is normal for the species and shall be sound, healthy, vigorous, well-branched and well-formed, with healthy root systems, and be free from disease, sunscald, windburn, abrasion, harmful insects or insect eggs.

2. Trees shall be symmetrically developed on all sides with reasonably straight trunks or stems (unless otherwise specified), and be free from objectionable disfigurements, bad crotches, or scars.

3. Plants shall be equal to or exceed the measurements specified in the plant list, which are minimum acceptable sizes. They shall be measured before pruning, with branches in normal position. Requirements for measurements, branching, and quality of plants in the plant list generally follow the code of standards currently recommended by the American Association of Nurserymen, Inc., in the American Standard for Nursery Stock. Plants of the same variety used in a group or in close proximity shall be of uniform size.

4. Plants larger than specified in the plant list may be used if approved by the Sandia Delegated Representative, but use of such plants shall not increase the contract price. If use of larger plants is approved, the root shall be increased in proportion to the size of the plant (in accordance with ANSI Z60.1).

5. Container grown plants shall have sufficient root growth to hold the soil intact when removed from containers, but shall not be root bound. They shall have been grown in containers for a period of not less than 6 months and for no more than two years with the exception of large container grown trees or specimen plants in 20 gallon or larger containers.

6. Provide groundcover plants in flats or removable containers.

7. Ground cover shall be established and well-rooted, and shall have sufficient roots to hold the soil intact after removal from the pot without being "pot-bound." Plants shall have runners meeting the minimum requirements for number and length as listed in ASNI Z60.1.

8. Plant materials shall conform to the requirements and recommendations of ANSI Z60.1. All plants shall have been grown or acclimatized under climatic conditions similar to those in the locality of the project.

9. Plants shall be dug and prepared for shipment in a manner that will not cause damage to future development after planting.

10. Rootballs of plant materials are to be free of weeds including but not limited to briars, bindweed, poison ivy, nutgrass and dallis grass.

11. Quality and Size of Plants: Conform to the State of California Grading Code of Nursery Stock, No. 1 grade.

12. Comply with federal and state laws requiring inspection for plant diseases and infestations. Inspection certificates required by law shall accompany each shipment of plants, and delivery certificates to the Sandia Delegated Representative. Before installing plants delivered from outside the county in which planted, obtain clearance from the County Agricultural Commissioner as required by law.

D. Storage:

1. Plants not installed on the day of arrival at the project site shall be stored and protected.

2. All plants stored on the project shall be protected from drying at all times by covering the balls or roots with moist sawdust, wood chips, shredded bark, peatmoss, or other similar materials. All plants shall be watered as necessary until planting.

E. Handling:

1. Care shall be taken to avoid damaging plants being moved to the project site. Plants shall not be lifted by the trunk or stem, and shall not be dropped.

During transportation to the site, plants shall be properly covered to prevent drying out. Damaged plants will be rejected and shall be removed from the site immediately.

2.02 MATERIALS (OTHER THAN PLANTS):

A. Topsoil: Additional topsoil required shall be furnished by the contractor. Import fertile, friable, natural, productive soil containing a normal amount of humus, capable of sustaining healthy plant life, free of subsoil, heavy or stiff clay, rocks, gravel, brush, roots, weeds, noxious seeds, sticks, trash, and other deleterious substances. Obtain soil from well-drained, arable land, and of an even texture and not from areas on which are growing any noxious weeds such as Morning Glory, Sorrel, or Bermuda Grass. Grading: Sandy loam per USDA 7th approximation classification method. All sandy loam must pass through a one-inch sieve with 85% sand fraction falling within the medium to fine sand range.

B. Soil Conditioners:

1. Peat moss shall be canadian 'sphagnum' peat moss having a pH range of 3.5 to 4.5, consisting of partially decomposed plant residues containing a negligible amount of woody or mineral material. Peat shall be evenly moist at the time of mixing and shall be delivered to the site in unopened original containers.

C. Fertilizer:

1. Commercial Fertilizer shall be organic, delivered to the site in unopened original containers, each bearing the manufacturer's guaranteed analysis.

a. Trees: Agriform 10-20-10 tablets (manufactured by Agriform International Chemicals, Inc.), or approved equal.

b. Shrubs and Groundcover: Granular fertilizer containing a minimum percentage by weight by 10 nitrogen (50% organic), 20 phosporic acid, and 10 potash.

D. Mulch:

1. Mulch shall be shredded fine bark mulch.

E. Tree Wrap:

1. Trees shall be wrapped as indicated with Kraft tree wrap (or approved equal), not less than 4" wide with 50% overlap. Trunks shall be wrapped to the lowest branches.

F. Guying and Staking Materials:

1. Stakes, Guys, and Chafing Guard:

    a. Provide as indicated on planting details.

G. Water: Water shall be suitable for irrigation and free from ingredients harmful to plant life. The Contractor will furnish required hoses and watering equipment; water for work will be provided at no cost to the contractor.

H. Edging:

1. Ryerson steel, 3/16", green.

2. Install according to manufacturer's directions.

PART 3 - EXECUTION

3.01 PLANTING SEASONS:

A. Planting may be done whenever the weather and soil conditions are favorable or as otherwise authorized by Sandia Delegated Representative.

3.02 LAYOUT:

A. Plant material locations shall be as shown on planting plan.

B. Prior to plant installation, lay out edges of planting beds and locate each major plant for review by the Sandia Delegated Representative.

3.03 EXCAVATION:

A. Prior to excavation of planting beds and pits, all areas shall conform to the grades and slopes as shown on plans, and the location of any underground utilities shall be verified by the Contractor. Damage to utilities shall be immediately repaired at Contractor's expense.

B. Rock and other debris shall be removed to a depth necessary to permit proper planting.

C. Plant pits shall be excavated with vertical sides and shall meet the minimum dimensions shown on planting details.

D. Excess soil and other excavated materials shall be removed from the project site, or as directed by Sandia Delegated Representative.

3.04 BED PREPARATION:

A. Eliminate all weeds, seeds, insects and disease organisms with Vapam fumigation, applied as per manufacturer's directions.

B. Bed areas shall be cultivated to a depth of 12", removing all grass, weeds, roots, rocks, and other debris.

C. Following cultivation, peat moss shall be tilled into the soil in an amount equal to a 3" deep layer.

3.05 SETTING PLANTS:

A. Trees:

1. Place Agriform tablets (or approved equal), in bottom of pit, according to manufacturer's instructions at the rate of one 21 gram tablet for each 1/2" of caliper.

2. Trees shall be set plumb and with the full side of the plant facing the front of the bed.

3. Soil shall be placed to secure the plant in position to approximately one half the depth of the ball. The backfill shall be tamped and watered to settle the soil and eliminate air pockets. Excess tying materials shall be removed or folded back. No wrapping materials shall protrude above soil level after planting is completed.

4. Trees shall be staked, guyed, wrapped, and mulched as indicated on planting details.

B. Shrubs and Groundcover:

1. Container grown stock shall be removed from containers in such a way as to prevent damage to plant or roots.

2. Shrubs shall be uniformly spaced as indicated, plumb, with the full side facing the front of the bed.

3. After establishment of finished grade around plants, all bed areas shall be topdressed with fertilizer at the rate of 2 lbs. per 100 sq. ft. Azaleas shall receive a special acid fertilizer. Contractor to submit type and rate for approval.

4. All bed areas shall have a mulch of shredded bark spread to a uniform thickness of 3".

C. Plants shall be set at the same depth at which they were grown, after settling.

3.06 WATERING:

A. All plant materials shall be watered until soil is saturated following planting.

3.07 PRUNING AND REPAIR:

A. Trees and shrubs shall be pruned and injuries repaired in the following manner:

1. The amount of pruning shall be limited to the minimum necessary to remove dead, diseased, damaged, or conflicting branches.

2. All cuts shall be flush with adjacent trunks or branches, leaving no stubs.

3. The typical growth habit of each plant shall be retained as much as possible.

4. All cuts larger than 3/4 inch diameter shall be trimmed back to healthy tissue, smoothed so as not to retain water and painted with tree wound dressing. Use waterproof, adhesive, and elastic paint; antiseptic, free from kerosene, coal tar, creosote, or any other material injurious to the tree. Do not bind plant with wire or rope which might damage the bark or break branches.

5. All pruned materials shall be removed from project site.

3.08 RESTORATION AND CLEAN-UP:

A. Excess and waste materials shall be removed daily. When planting has been completed in an area, all debris and containers shall be removed.

3.09 MAINTENANCE DURING INSTALLATION

A. Maintenance operations shall begin immediately after each plant is installed and shall continue as required until final acceptance. Plants shall be kept in a healthy, growing condition by watering, pruning, spraying, weeding, and any other necessary operations. Planting beds shall be kept free of weeds, grass, and other undesired vegetation. Keep all walks and paved areas clean. The site is to be kept clear of debris resulting from landscape work or maintenance.

B. Contractor shall be responsible for repair or replacement of any damaged structures, plants, etc. in which damage resulted from planting operations.

3.10 GUARANTEE PERIOD AND ACCEPTANCE

A. Inspection And Provisional Acceptance:

1. Sandia Delegated Representative shall inspect all work for Provisional Acceptance upon written request by the contractor seven days in advance.

2. Upon completion of all repairs or replacements requested at the time of inspection, Sandia Delegated Representative shall certify in writing the Provisional Acceptance.

3. Beginning on the date Provisional Acceptance is granted, Sandia will assume responsibility for all maintenance.

B. Guarantee Period:

1. All plant material shall be guaranteed for replacement for a period of one year, beginning on the date of the Provisional Acceptance.

2. Replacements:

a. Any plant required under this contract that is dead or not showing satisfactory growth, as determined by Sandia Delegated Representative shall be promptly removed from the site and replaced by the contractor. All replacements shall be of the same size and variety as originally specified, unless otherwise directed.

b. The contractor will not be responsible for theft or damage to plants by vehicles or vandalism following Provisional Acceptance.

C. Final Inspection And Final Acceptance:

1. At the end of the guarantee period, inspection of plants will be made by the Sandia Delegated Representative upon written request by Contractor with seven days notice. The contractor will be notified in writing of the Final Acceptance, or of work required.

2. Any plant, as required under this contract, that is dead, not true to name or size as specified, or not in satisfactory growth, as determined by Sandia Delegated Representative shall be removed from site and replaced as originally specified without cost to Sandia.

END OF SECTION

SECTION 02501

PORTLAND CEMENT CONCRETE SIDEWALK

PART 1 - GENERAL

1.01 RELATED DOCUMENTS

A. Drawings and general provisions of Contract, including General and Supplementary Conditions and Division-1 Specification Sections, apply to work of this section.

1.02 DESCRIPTION

A. This section covers the requirements for portland cement concrete sidewalks, handicap ramps, and exterior plazas.

1.03 WEATHER LIMITATIONS

A. Construct sidewalk when atmospheric temperature is above 40 degrees F., when the underlying base is dry and not frozen, and when weather is not rainy.

PART 2 - PRODUCTS

2.01 PORTLAND CEMENT CONCRETE

A. Portland cement concrete shall have a 28-day compressive strength of 3000 psi and shall conform with Specification Section 03300: Cast-in-Place Concrete.

2.02 CURING AGENTS

A. Burlap cloth shall conform to AASHTO M182, Class 2 or better.

B. Sheet materials shall conform to AASHTO M171.

C. Liquid membrane-forming compounds shall conform to AASHTO M148, Type 2, Class B.

2.03 PREFORMED EXPANSION JOINT FILLER

A. Preformed expansion joint filler shall conform to AASHTO M153 or M213.

2.04 POLYMER JOINT SEALER

A. Joint sealer shall be either a two-part polysulfide or two-part urethane cold-applied compound.

   1. Joint sealer shall be a self-leveling type conforming to Federal Specification TT-S-00227E, Type 1.

B. Color of joint sealer shall closely match the color of the concrete adjacent to the joint.

C. Bond breaker shall be a pressure-sensitive aluminum foil tape or a pressure-sensitive polyethylene tape conforming to Military Specification MIL-T-22085A, Type II.

2.05 FORMS

A. Forms shall be of metal or wood. They shall be suitable in cross section, depth, and strength to resist springing during depositing and consolidating the concrete.

B. Forms shall not vary from a straight line more than 1/8-inch in any ten-foot-long section in either a horizontal or vertical direction.

C. Flexible or curved forms shall be used for radius forming.

D. Wood forms shall be at least two (2) inches thick and shall also be free from warp, twist, loose knots, splits, or other defects.

E. Metal keyways shall be shaped from metal of a minimum 18-gauge thickness and shall be free from kinks.

2.06 REINFORCEMENT

A. Reinforcement steel shall be used.

B. Deformed bar steel reinforcement shall conform to applicable requirements designated in Section 03200: Concrete Reinforcement.

PART 3 - EXECUTION

3.01 PREPARATION OF GRADE

A. After grading and compacting, the grade shall be trimmed to correct elevation, extending the work at least one foot beyond each edge of the proposed surfacing.

B. Compaction:

1. Compaction shall be performed with hand or mechanical equipment well-suited to the material being compacted.

2. Material shall be moistened or aerated as necessary.

3. For compaction densities and moisture content requirements, see Section 02250: Compaction Control and Testing.

3.02 SETTING FORMS

A. Forms shall be firmly in contact with the grade for their whole length.

B. Forms shall be staked in place with not less than 3 pins for each 10-foot section.

C. Forms shall not deviate from true line by more than 1/4 inch at any point.

D. The alignment and grade elevations of the forms shall be checked and corrections made by the Contractor immediately before placing the concrete.

3.03 PLACING REINFORCEMENT

A. Reinforcement shall be free from dirt, oil, rust, scale, or other substances that prevent the bonding of the concrete to the reinforcement.

B. Reinforcement shall be accurately and securely fastened in place with suitable supports and ties.

C. Reinforcement shall be placed in the middle of the slab unless otherwise indicated on the drawings.

D. Steel shall not extend through contraction or expansion joints but shall be stopped clear of joint by not less than two (2) inches and not more than four (4) inches. The same clearances shall apply between the slab edges and extreme longitudinal reinforcement.

E. Laps, where necessary, shall be not less than the spacing of the wires, or 30 bar diameters.

3.04 MIXING CONCRETE

A. Ready-mixed concrete shall be mixed and delivered in accordance with the requirements of Section 03300: Cast-in-Place Concrete.

3.05 PLACING CONCRETE

A. Concrete shall be deposited on the grade without segregation of the materials.

B. Placing shall be continuous between transverse joints without the use of intermediate bulkheads.

C. Concrete shall be thoroughly consolidated against and along the faces of all forms and along the full length and on both sides of all joint assemblies by means of vibrators inserted in the concrete.

3.06 STRIKE OFF

A. Following the placing of the concrete, it shall be struck off to conform to the cross section shown on the Drawings.

3.07 JOINTS

A. Joints shall be constructed of the type and dimensions, and at the locations required by the Drawings. Expansion, contraction, and construction joints shall be protected from the intrusion of injurious foreign material until sealed.

B. Dummy grooves and contraction joints shall be cut to depth indicated on the drawings.

C. Expansion joint filler shall be continuous from form to form and shaped to the subgrade.

D. A keyed construction joint shall be installed whenever the placing of concrete is suspended for more than 30 minutes and at the end of each day's work. Transverse construction joints shall be placed only at dummy groove locations.

3.08 FINAL STRIKE OFF

A. The sequence of operations shall be the strike off and consolidation, floating and removal of laitance, straightedging, and final surface finish. In general, the addition of superficial water to the surface of the concrete to assist in finishing operations will not be permitted.

B. As soon as the concrete has been placed, it shall be struck off and screeded to planned line and grade.

C. After the concrete has been struck off and consolidated, it shall be further smoothed, trued, and consolidated by means of either a hand-operated longitudinal float longer than the sidewalk width and 6 inches in width, properly stiffened, or a mechanical float.

D. After the floating has been completed and the excess water removed, but while the concrete is still plastic, depressions shall be immediately filled with freshly mixed concrete, struck off, consolidated, and refinished. High areas shall be cut down and refinished.

E. The surface shall be textured with a fiber-bristle broom moistened with clear water. The corrugations produced shall be uniform in appearance and approximately 1/32-inch in depth. The corrugations shall be perpendicular to the length of the sidewalk.

F. The edges of the sidewalk along each side and expansion joint shall be finished with an edger having a radius of 1/8-inch and a horizontal surface face of four (4) inches.

3.09 SURFACE TEST

A. The finished surface shall be tested with a 10-foot straightedge.

B. Where the departure exceeds 3/16-inch in 10 feet, the sidewalk shall be removed between joints and replaced by and at the expense of the Contractor.

3.10 CURING

A. Immediately after the finishing operations have been completed and as soon as marring of the concrete will not occur, the entire surface of the newly placed concrete shall be covered and cured for at least seven (7) days.

B. Unhardened concrete shall be protected from rain and flowing water.

C. Equipment and materials needed for adequate curing and protection of the concrete shall be on hand before concrete placement begins.

D. Protection shall be provided as necessary to prevent cracking of the pavement due to temperature changes during the curing period.

E. If the selected method of curing does not afford the proper curing and protection against concrete cracking, the damaged pavement shall be removed and replaced and another method of curing shall be employed as directed by the Sandia Delegated Representative.

F. Curing Methods

1. Burlap Mat

a. A minimum of two layers of burlap cloth shall be kept saturated with water for the curing period.

b. Mats shall overlap each other at least six (6) inches.

2. Impervious Sheeting

a. The entire exposed concrete surface shall be wet with a fine spray of water and then covered with the sheeting material. Sheeting shall be securely anchored.

b. Sheets shall overlap each other at least twelve (12) inches.

3. Liquid Membrane Curing

a. Curing compound shall be applied in two coats at right angles to each other at a rate of one gallon per 200 square feet for both coats.

b. The concrete shall not be allowed to dry before the application of the membrane.

c. Joints to be sealed shall be cured by inserting moistened paper or fiber rope or covering with waterproof paper prior to application of the curing compound in a manner to prevent the curing compound from entering the joint.

d. Any area covered with curing compound and damaged during the curing period shall be resprayed immediately.

3.11 REMOVING FORMS

A. Forms shall not be removed from freshly placed concrete until it has set for at least 12 hours.

B. Forms shall be removed carefully so as to avoid damage to the sidewalk.

C. Sides of the slab shall be cured as outlined in Paragraph 3.10.

D. Major honeycombed areas will be considered as defective work and shall be removed and replaced at the Contractor's expense.

3.12 SEALING JOINTS

A. General

1. Joints shall be sealed as soon after completion of the curing period as feasible.

2. Just prior to sealing, each joint shall be thoroughly cleaned of all foreign material.

3. The concrete at the joint shall be surface-dry and the ambient temperature shall be above 50 degrees F., at the time of application.

4. The joint sealer shall not spill over the joint onto adjacent surfaces.

5. Joint shall be primed when recommended by sealant manufacturer.

6. Mix and apply sealant as recommended by sealant manufacturer.

B. Expansion Joints

1. Place bond breaker tape over filler.

2. Fill joint with sealer to within 1/8-inch of surface.

C. Isolation Joints

1. Place bond breaker on bottom of 1/4-inch joint.

2. Fill joint with sealer to within 1/8-inch of surface.

END OF SECTION

SECTION 02513

ASPHALTIC CONCRETE PAVING

PART 1 - GENERAL

1.01 RELATED DOCUMENTS

A. Drawings and general provisions of Contract, including General and Supplementary Conditions and Division-1 Specification sections, apply to work of this section.

1.02 DESCRIPTION

A. This section covers the requirements for the prime coat and tack coat for asphalt and asphalt concrete paving.

1.03 STANDARD SPECIFICATIONS

A. Asphaltic concrete paving equipment, mixing, construction, and protection shall conform to the requirements of the enumerated sections of the STANDARD SPECIFICATIONS, STATE OF CALIFORNIA DEPARTMENT OF TRANSPORTATION, dated 1988 (referred to in this specification as CALTRANS Standard Specifications).

B. References to the "Engineer" and "Department" in the CALTRANS Standard Specifications shall be changed to refer to the "Sandia Delegated Representative."

C. References to the "Materials Division" and "Materials Engineer" in the CALTRANS Standard Specifications shall be changed to refer to "Testing Lab" and "Testing Engineer."

D. Delete subsections titled "Method of Measurement" and "Basis of Payment."

PART 2 - PRODUCTS

2.01 SURFACE COURSE AGGREGATE

A. Aggregate for the Asphalt Surface Course shall be crushed stone, crushed gravel and sharp-edged natural sand conforming to Type B, 1/2" maximum size, medium gradation as described in CALTRANS Standard Specifications Subsection 39-2.02.

2.02 ASPHALT

A. Asphalt Cement shall comply with AASHTO M226.

1. Viscosity grade shall be AR-4000 as specified in CALTRANS Standard Specifications Subsection 92-1.02.

2.03 PRIME COAT

A. Asphalt for prime coat shall be the following:

1. Cut-Back Asphalt, Medium Curing Type

a. Cut-back asphalt, medium curing type MC-70 conforming to AASHTO M 82.

b. The Spot Test with Standard Naphtha is required and shall be negative for all grades.

2.04 TACK COAT

A. Asphalt for tack coat shall be emulsified asphalt SS-1h conforming to AASHTO M 140, diluted one part water to one part emulsified asphalt.

PART 3 - EXECUTION

3.01 EQUIPMENT

A. Distributors shall conform to CALTRANS Standard Specifications Subsection 39-5.01.

B. Compactors shall conform to CALTRANS Standard Specifications Subsection 39-5.02.

C. Mixing Plants

1. All plants shall conform to CALTRANS Standard Specifications:

2. Batching plants shall conform to the additional requirements of CALTRANS Standard Specifications Subsection 39-3.04A.

3. Continuous mixing plants shall conform to the additional requirements of CALTRANS Standard Specifications Subsection 39-3.04B.

4. Dryer drum mixing plants shall conform to the additional requirements of CALTRANS Standard Specifications Subsection 39-3.04C.

D. Asphalt pavers shall conform to CALTRANS Standard Specifications Subsection 39-5.01.

3.02 PREPARING MIXTURE

A. Delivering and stockpiling of aggregates shall conform to CALTRANS Standard Specifications Subsection 39-3.01.

B. The bituminous material and aggregate shall be heated to the temperature specified in CALTRANS Standard Specifications Subsection 39-6.01 and in a manner that will avoid local overheating and provide a continuous supply of the bituminous material to the mixer at a uniform temperature at all times.

C. Drying and bin storage of aggregate shall conform to CALTRANS Standard Specifications Paragraph 39-3.02.

D. Mixing of materials shall conform to CALTRANS Standard Specifications Subsection 39-3.04.

3.03 PLACING ASPHALT MIXTURE

A. Weather limitations shall be in accordance with CALTRANS Standard Specifications Subsection 39-6.01.

B. Spreading and finishing shall conform to CALTRANS Standard Specifications Subsection 39-6.02.

C. Joints shall conform to CALTRANS Standard Specifications Subsection 39-6.02.

D. Compaction shall conform to CALTRANS Standard Specifications Subsection 39-6.03.

E. Surface tolerances shall conform to CALTRANS Standard Specifications Subsection 39-6.01.

F. Width and thickness shall conform to CALTRANS Standard Specifications Subsection 39-6.01.

G. Traffic shall not be permitted on the asphalt concrete pavement until it has received its final rolling.

3.04 PRIME COAT

A. Weather limitations shall be in accordance with CALTRANS Standard Specifications Subsection 39-6.01.

B. Preparation of surface shall conform to CALTRANS Standard Specifications.

C. Application of bituminous material shall conform to CALTRANS Standard Specifications.

D. Application Temperature

1. Emulsified asphalt SS-1 shall be sprayed at 50-140 degrees F.

2. Cut-back asphalt MC-70 shall be sprayed at 105-175 degrees F.

3.5 TACK COAT

A. Tack coat application shall conform to CALTRANS Standard Specifications Subsection 93-1.03.

END OF SECTION

SECTION 02514

PORTLAND CEMENT CONCRETE PAVING

PART 1 - GENERAL

1.01 RELATED DOCUMENTS

A. Drawings and general provisions of Contract, including General and Supplementary Conditions and Division-1 Specification Sections, apply to work of this section.

1.02 DESCRIPTION

A. This section covers the requirements for portland cement concrete surfaces.

1.03 QUALITY ASSURANCE

A. Design Mix: The Contractor shall prepare a design mix which has been proportioned by either laboratory trial batch or field experience methods, using materials to be employed on the project. The following tests shall be performed for the design mix utilized on the project:

1. Sieve analysis of fine and coarse aggregates: AASHTO T 27.

2. Specific gravity and absorption of fine aggregate: AASHTO T 84.

3. Specific gravity and absorption of coarse aggregate: AASHTO T 85.

4 Air content of freshly mixed concrete by the pressure method: AASHTO T 152.

5 Slump of concrete: AASHTO T 119.

6 Flexural strength of concrete (using simple beam with third-point loading) developed at 28 days, not less than three test specimens: AASHTO T 97.

B. Field Quality Control: One set of field quality control tests shall be taken for each 100 cu. yds., or fraction thereof, placed in any one day. The following tests shall be performed for each field quality control sample:

1. Air content of freshly mixed concrete by the pressure method: AASHTO T 152.

2. Slump of concrete: AASHTO T 119.

3. Flexural strength of concrete (third-point loading), three specimens tested at 28 days: AASHTO T97.

    a. Two specimens shall be delivered to the laboratory about 24 hours after being molded and shall be moist-cured under laboratory conditions.

    b. One specimen shall be kept on or near the work and shall receive the same protection from the elements and the same curing treatment as is given that portion of the work from which the sample was taken.

1.04 SUBMITTALS

A. Design Mix: The Contractor shall submit a report including the following data:

1. Complete identification of aggregate source of supply.

2. Test of aggregates for compliance with specified requirements.

3. Brand, type and composition of cement.

4. Brand, type and amount of each admixture.

5. Amounts of water used in trial mixes.

6. Proportions of each material per cu. yd.

7. Gross weight and yield per cu. yd. of trial mixtures.

8. Measured air content of concrete.

9. Measured slump of concrete.

10. Flexural strength of concrete.

B. Field Quality Control: The Testing Laboratory shall submit a report including the following data:

1. Measured air content of concrete.

2. Measured slump of concrete.

3. Flexural strength of concrete.

1.05 WEATHER LIMITATIONS

A. Construct paving when atmospheric temperature is above 40 degrees F., when the underlying base is dry and not frozen, and when weather is not rainy.

PART 2 - PRODUCTS

2.01 PORTLAND CEMENT CONCRETE

A. Air-entrained portland cement concrete meeting the following specifications shall be used for all portland cement concrete paving called for on the drawings.

B. Portland cement shall meet the requirements of AASHTO M 85-80, Type II or Type IIA "Air-Entraining Cement."

C. Water shall be clean, fresh, drinkable and practically free from oil, salt, acid, alkali, organic matter or other substances injurious to the finished product.

D. Fine Aggregate:

1. Fine aggregate shall meet the requirements of AASHTO M6-65 (1974).

2. In general, fine aggregate shall consist of natural sand having hard, strong, durable particles free from deleterious substances and meeting the following gradation requirements:

Sieve	Mass-Percent Passing
3/8 in.	100
No. 4	95-100
No. 16	45-80
No. 50	10-30
No. 100	2-10

3. Fine aggregate shall constitute approximately 30 to 35 percent of the total aggregate used.

E. Coarse Aggregate

1. Coarse aggregate shall meet the requirements of AASHTO M80-77.

2. Coarse aggregate shall consist of gravel, crushed gravel or crushed stone.

3. Gradation of coarse aggregate shall conform to the requirements of AASHTO M43-54 (1974), Size Number 57:

Sieve	Mass-Percent Passing

1-1/2 in.	100
1 in.	95-100
1/2 in	25-60
No. 4	0-10
No. 8	0-5

4. Maximum allowable percent of deleterious substances shall meet the requirements of AASHTO M80-77, Class B.

F. Air-Entraining admixtures shall meet the requirements of ASTM C 260.

G. Proportioning and Design of Mixes:

1. Cement - 564 lbs. per cu. yd.

2. Air Content - 5 to 7 percent.

3. Maximum Water - Cement ratio - 0.50 lb. per lb.

4. Slump - 1 to 3 inches.

5. Minimum modulus of rupture in flexure (third-point loading) - 650 psi at 28 days.

2.02 CURING AGENTS

A. Burlap cloth shall conform to AASHTO M182, Class 3 or better.

B. Liquid membrane-forming compounds shall conform to CALTRANS Standard Specifications Section 90-7.

C. Sheet materials shall conform to AASHTO M171.

2.03 PREFORMED EXPANSION JOINT FILLER

A. Preformed expansion joint filler (nonextruding and resilient type) shall conform to AASHTO M213.

B. Filler shall consist of preformed strips made of cane or other suitable fibers of a cellular nature securely bound together and then uniformly saturated with asphalts; or strips formed from clean granulated cork securely bound together by a suitable asphalt binder and encased between two layers of glass-fiber felt.

2.04 POLYMER JOINT SEALER

A. A two component, polymer type, rubberlike, cold applied joint sealing compound shall be used.

B. Machine Extruded Joint Sealer: The joint sealer shall be a modified polysulfide polymer consisting of two components to be mixed in a 1:1 ratio by volume and machine extruded directly into the joints.

C. Pourable Joint Sealer: The joint sealer shall be a polymeric material consisting of 2 components to be uniformly mixed and poured directly into the joints.

2.05 METAL PARTING STRIPS

A. Metal parting strips shall be shaped from metal of a minimum 18 gage thickness and shall be free from kinks.

B. Strips shall conform to the dimensions and be punched for tie bars as shown on the Drawings.

C. Iron pipe 15 in. long, spaced a maximum of 3'-0" center to center, shall be used to support metal parting strips.

2.06 REINFORCING STEEL

A. Deformed billet-steel bars for concrete reinforcement and tie bars shall conform to the requirements for AASHTO M 31.

2.07 LOAD TRANSFER UNITS FOR EXPANSION JOINTS

A. Unit shall have sufficient rigidity and be so held in place during concrete placement that dowels will be in a true position in the finished pavement.

B. The heights of the load transfer unit (measured to the center of the dowel bar) shall be one-half the thickness of the pavement.

C. Dowel bars shall conform to ASTM A-36.

D. Dowel bars shall have a shop or field coat of red lead or zinc chromate for full length of bars, and alternate ends shall have a field coat of MC-70 lubricant for a minimum of one-half the length of the bars.

E. The lubricated ends of the dowel bars shall have expansion caps with a minimum one inch and a maximum two inch air space in the end of the expansion cap.

PART 3 - EXECUTION

3.01 PREPARATION OF GRADE

A. After grading and compacting, the grade shall be trimmed to correct elevation, extending the work at least one foot beyond each edge of the proposed surfacing.

3.02 SETTING FORMS

A. Forms shall be firmly in contact with the grade for their whole length.

B. Forms shall be staked in-place with not less than 3 pins for each 10-foot section.

C. Forms shall not deviate from true line by more than 1/4-inch at any point.

D. The alignment and grade elevations of the forms shall be checked and corrections made by the Contractor immediately before placing the concrete.

3.03 MIXING CONCRETE

A. Ready-mixed concrete shall be mixed and delivered in accordance with the requirements of Section 03300: Cast-in-Place Concrete.

3.04 PLACING CONCRETE

A. Concrete shall be deposited on the grade without segregation of the materials.

B. Placing shall be continuous between transverse joints without the use of intermediate bulkheads.

C. Concrete shall be thoroughly consolidated against and along the faces of all forms and along the full-length and on both sides of all joint assemblies, by means of vibrators inserted in the concrete.

3.05 STRIKE OFF

A. Following the placing of the concrete, it shall be struck off to conform to the cross section shown on the Drawings.

3.06 JOINTS

A. Joints shall be constructed of the type and dimensions, and at the locations required by the Drawings. Joints shall be protected from the intrusion of injurious foreign material until sealed.

B. When shown on the plans, steel side forms shall be used which will form a keyway along the construction joint. Tie bars may be bent at right angles against the form of the first lane constructed and straightened into final position before the concrete of the adjacent lane is placed.

C. Saw cuts shall be by means of a saw with a water-cooled diamond-edge saw blade or an abrasive wheel. Joints shall be sawed before the end of the curing period or shortly thereafter and before any equipment or vehicles are allowed on the pavement.

D. Expansion joint filler shall be continuous from form to form, shaped to the subgrade and to the keyway along the form.

E. Transverse construction joints shall be constructed only at contraction joint locations.

3.07 FINAL STRIKE OFF

A. The sequence of operations shall be the strike off and consolidation, floating and removal of laitance, straightedging, and final surface finish. In general, the addition of superficial water to the surface of the concrete to assist in finishing operations will not be permitted.

B. As soon as the concrete has been placed, it shall be struck off and screeded.

C. Hand finishing will be allowed in areas not accessible by the machinery.

D. After the concrete has been struck off and consolidated, it shall be further smoothed, trued, and consolidated by means of either a hand-operated longitudinal float not less than 12 feet in length and 6 inches in width, properly stiffened, or a mechanical float.

E. After the floating has been completed and the excess water removed, but while the concrete is still plastic, depressions shall be immediately filled with freshly mixed concrete, struck off, consolidated, and refinished. High areas shall be cut down and refinished.

F. The surface shall be textured by broom, belt or drag finishing. If the surface texture is to be a broom finish, the corrugations produced shall be uniform in appearance and approximately 1/16 inch in depth.

G. The edges of the pavement along each slab and joint shall be rounded to the radius required by the Drawings.

3.08 SURFACE TEST

A. The finished surface shall be tested with a 12-foot straightedge. Areas showing high spots of more than 1/4 inch in 12 feet shall be ground down.

B. Where the straight edge departure exceeds 1/2 inch, the pavement shall be removed and replaced by and at the expense of the Contractor. Where the departure from correct cross section exceeds 1/4-inch, the pavement shall be removed and replaced by and at the expense of the Contractor.

C. Any area or section so removed shall be not less than 10 feet in length nor less than the full width of the lane involved. When it is necessary to remove and replace a section of pavement, any remaining portion of the slab adjacent to the joints that is less than 10 feet in length, shall also be removed and replaced.

3.09 CURING

A. Immediately after the finishing operations have been completed and as soon as marring of the concrete will not occur, the entire surface of the newly placed concrete shall be covered and cured in accordance with one of the methods below:

1. The surface shall be entirely covered with burlap mats, the mats weighted down, and the covering shall be maintained fully wetted and in position for 72 hours.

2. The surface shall be entirely covered with waterproof paper, the paper being sufficiently weighted down. The covering shall be maintained in place for 72 hours.

3. Membrane Curing: A uniform coating of membrane-curing compound shall be applied to the entire exposed surface of the concrete as soon after finishing as the free water has disappeared from the finished surface. Formed surfaces shall be coated immediately after the forms are removed and in no case longer than 1 hour after the removal of forms. Concrete shall not be allowed to dry before the application of the membrane. If any drying has occurred, the surface of the concrete shall be moistened with a fine spray of water, and the curing compound applied as soon as the free water disappears. Spraying pressure shall be sufficient to produce a fine spray as necessary to cover the surface thoroughly and completely with a uniform film. Spray equipment shall be maintained in first-class mechanical condition. The curing compound shall be applied with an overlapping coverage that will give a two-coat application at a coverage of not more than 400 square feet per gallon for each

coat. The compound shall form a uniform, continuous, cohesive film that will not check, crack, or peel and that will be free from pinholes and other discontinuities. If pinholes, abrasions, or other discontinuities exist, an additional coat shall be applied to the affected areas within 30 minutes. Concrete surfaces that are subjected to heavy rainfall within 3 hours after the curing compound has been applied shall be resprayed by the method and at the coverage specified above. Areas where the curing compound is damaged by subsequent construction operations within the curing period shall be resprayed. Concrete surfaces to which membrane-curing compounds have been applied shall be adequately protected during the entire curing period from pedestrian and vehicular traffic, except as required for joint-sawing operations and surface tests, and from any other possible damage to the continuity of the membrane.

3.10 REMOVING FORMS

A. Forms shall not be removed from freshly placed concrete until it has set for at least 12 hours.

B. Forms shall be removed carefully so as to avoid damage to the pavement.

C. Sides of the slab shall be cured as outlined in Paragraph 3.9.

D. Major honeycombed areas will be considered as defective work and shall be removed and replaced at the Contractor's expense.

3.11 SEALING JOINTS

A. Joints shall be sealed as soon after completion of the curing period as feasible and before the pavement is opened to traffic.

B. Just prior to sealing, each joint shall be thoroughly cleaned of all foreign material.

3.12 OPENING TO TRAFFIC

A. Surfacing shall not be opened to traffic until 14 days after the concrete was placed or as directed by the Sandia Delegated Representative.

END OF SECTION

SECTION 02515

INTERLOCKING CONCRETE PAVERS

PART 1 - GENERAL

1.01 RELATED DOCUMENTS

A. Drawings and general provisions of Contract, including General and Supplementary Conditions and Divisions-1 Specifications, apply to work of this section.

1.02 SCOPE OF WORK

A. General:

1. Furnish all labor, materials, tools, equipment, and services required to install all concrete pavers, bedding and edge restraints as indicated, in accordance with provisions of Contract Documents.

2. Completely coordinate with work for all other trades.

1.03 QUALITY ASSURANCE

A. Bedding: ASTM C-33.

B. Pavers: ASTM C-936.

C. Base and subbase compaction testing: ASTM D698 (D1557).

1.04 SUBMITTALS

A. Samples:

1. Concrete Paver: Three samples of each type of unit proposed for use, with manufacturer's technical data.

B Project Information:

1. Paver installation contractor shall submit a list of 3 successfully completed projects of similar scope for reference check.

2. Paver installation contractor shall be a company specializing in the installation of solid concrete interlocking pavers with a minimum of 3 years experience.

1.05 PRODUCT DELIVERY, STORAGE AND HANDLING

A. Deliver and store in accordance with manufacturer's recommendations.

B. Store concrete pavers protected to avoid damage.

C. Deliver product on pallets.

PART 2 - PRODUCTS

2.01 MATERIALS

A. Acceptable Manufacturers:

1. Pavestone Company, P.O. Box 413, Grapevine, Texas 76051 (817)481-5802, or approved equal.

2.02 PAVERS

A. Comply with ASTM C936.

B. Manufactured with:

1. ASTM C33 aggregate.

2. Fine aggregate.

3. Minimum 75 percent acid insoluble.

C. Fine aggregate contains siliceous type sand to impart skid resistance. Manufactured limestone concrete sand not acceptable.

D. Compressive strength 8000 p.s.i.

E. Paver type:

1. Dimensions as shown on drawings.

F. Colors:

1. Pigments synthetic, alkali resistant, iron oxide as manufactured by Mobay Chemical Corp.

2. Antique red, buff.

G. Installation Pattern:

1. As indicated on drawings.

2.03 BEDDING MATERIAL

A. Sand: Washed sharp sand meeting requirements of ASTM C33 gradation size No. 8. Do not use manufactured limestone, manufactured concrete sand or mortar sand.

B. Free of deleterious substances.

C. Maintain moisture content at 3-7 percent during installation.

2.04 SUBBASE MATERIAL

A. Provide a subbase of 6 inches of Class 2 aggregate.

2.05 FILTER FABRIC

A. Geotextile fabric, woven of mono-filaments of isotactic polypropylene.

1. Water Permeability: 70 sieve.

2. Thickness: 20 mils.

3. Weight: 7.2 ounces per square yard.

PART 3 - EXECUTION

3.01 PREPARATION

A. The base course shall be shaped to grade and cross section with an allowable tolerance of 1/4" (relative to specific dimensions below finish design elevation).

B. The compacted base shall be recessed below finish grade by the same depth as the paver thickness.

C. Perform all moisture control required to maintain stability of stabilized subbase.

3.02 COMPACTION

A. Compact subbase in maximum 6 in. lifts at optimum moisture content.

B. Compact each layer to minimum 95 percent density.

C. Level final compacted layer to 1/4 inch tolerance.

3.03 PREPARATION FOR SAND LAYING COURSE

A. Install filter fabric, lapped minimum 4 in. over entire surface.

B. Assure that level tolerances are maintained.

3.04 SAND LAYING COURSE

A. Sandia Delegated Representative shall approve the finished subbase prior to placement of sand course.

B. Spread and screed level to specified tolerance of 1/4 in. 10 ft.

C. Screed the sand to a level that will produce a minimum 1 inch thick layer when the pavers have been placed and vibrated.

D. Do not allow foot or vehicular traffic on bedding sand.

E. Do not use bedding as leveling course or to correct deviations in base/sub-base.

F. Do not compact bedding prior to paver installation.

G. Do not screed bedding sand in advance of work which will not be completed in a 24 hour period.

3.05 PAVER INSTALLATION

A. Level top of edging to 1/4 in. in 10 feet; maintain side of edging plus/minus 1/4 in. of drawing dimension.

B. Establish pattern layout direction and create permanent markings for directional reference of joints and string lines.

C. Set first course of pavers 1/8 inch from edge restraint.

D. Set pavers with nominal 1/16 to 1/8 inch joints between abutting units.

E. Carefully align joints to maintain straight lines.

F. Cut and fit closure units leaving residual gaps not exceeding 1/4 inch.

G. Use mechanical splitter or power masonry saw to provide a clean continuous edge cut.

H. Using a flat plate compactor (minimum 3500 lbs. compaction force and covering minimum of 3 sq. ft), tamp pavers into place, with 1/4 inch in 10 feet surface tolerance (1 in 500).

I. Resulting surface level adjacent to drainage outlets or curbs to be 1/8 to 1/16 inch high to assure positive drainage.

J. Assure that construction traffic is not allowed on pavers during installation; other than paving contractor's equipment required for installation.

K. Remove structurally damaged concrete pavers and replace.

L. Surface tolerance of tamped pavers: 1/4 inch in 10 feet.

M Maximum variation between adjacent paver level; not over 1/16 inch.

3.06 FILLING JOINTS AND FINISHING PAVEMENT

A. Brush dry sharp sand over surface of pavement and revibrate pavement, minimum 2 passes, until all joints are completely filled with sand.

B. At completion sweep off excess sand.

C. Resand joints if sand is more than 1/8 inch below surface of paver.

3.07 CLEAN UP

A. Upon completion of work covered in this section, the Contractor shall clean up all work areas by removing all debris, surplus material and equipment from the site.

END OF SECTION

SECTION 02516

PAVEMENT MARKINGS (PAINT)

PART 1 - GENERAL

1.01 RELATED DOCUMENTS

A. Drawings and general provisions of Contract, including General and Supplementary Conditions and Division-1 Specification sections, apply to work of this section.

1.02 DESCRIPTION

A. This section covers the requirements for white and yellow traffic stripe paint and the placing of white and yellow traffic paint by the drop-on method.

1.03 QUALITY ASSURANCE

A. The traffic paint shall conform on a weight basis to the composition of the standard formula as closely as accepted good paint practice will permit. No variation from standard formula will be permitted except for replacement of volatiles lost in processing or those approved by the Sandia Delegated Representative.

PART 2 - PRODUCTS

2.01 PAINT

A. Paint for traffic stripes and pavement markings shall conform to the following State Specifications:

Paint	State Specification No.
Fast Dry Solvent Borne - White, Yellow, and Black	8010-51K-04
Rapid Dry Solvent Borne - White and Yellow	8010-51K-02
Rapid Dry Water Borne - White, Yellow and Black	8010-42L-30

Glass beads Shall conform to State Specification No. 8010-51J-22 Type II. Copies of State Specifications for traffic paint and glass beads may be obtained from the Transportation Laboratory, P.O. Box 19128, Sacramento, CA 95819, (916) 739-2400.

PART 3 - EXECUTION

3.01 CONSTRUCTION IN GENERAL

A. The Contractor shall clean all dirt, glaze and grease, road film, curing compound and all other foreign materials from the pavement area to be striped.

B. The material shall be applied to the pavement at a wet film thickness of approximately 0.015 inch (0.38 mm).

C. The completed line shall be a uniform cross section. The paint traffic stripe shall not be applied when there is moisture on the pavement that would cause a poor bond between the paint and the pavement.

D. Application shall not be permitted when atmospheric temperature is below 40 degrees F for solvent borne paint or below 50 degrees F for water borne paint.

E. Size and location of traffic stripes shall be as shown on the drawings.

3.02 SURFACES

A. Inspect paving before start of painting work to make sure that it conforms to details on drawings and to other requirements specified under Sections 02513: Asphaltic Concrete Paving and 02514: Portland Cement Concrete Paving.

3.03 SEQUENCE OF WORK

A. Painting work shall not begin until all paving work, curb, and gutters are completed and surfaces are clean and dry.

3.04 LOCATIONS AND ELEVATIONS

A. Preserve principal base lines, and centerlines as shown on drawings and established in the field.

END OF SECTION

SECTION 02532

STABILIZED AGGREGATE BASE COURSE

PART 1 - GENERAL

1.01 RELATED DOCUMENTS

A. Drawings and general provisions of Contract, including General and Supplementary Conditions and Division-1 Specification sections, apply to work of this section.

1.02 DESCRIPTION

A. This section covers the requirements for a stabilized aggregate base course.

1.03 STANDARD SPECIFICATION

A. The Standard Specifications State of California Department of Transportation (CALTRANS Standard Specifications) shall be used except for the following modifications:

1. Delete subsections titled "MEASUREMENT".

2. Delete subsections titled "PAYMENT".

3. Delete references to preparation of subgrade; see Section 02210 for subgrade.

4. Delete compaction requirements; see Paragraph 3.02 for compaction.

5. References to the "Engineer" in the CALTRANS Standard Specifications shall be changed to refer to the "Sandia Delegated Representative."

6. References to the "Materials Engineer" in the CALTRANS Standard Specifictations shall be changed to refer to the "Testing Engineer."

1.04 SUBMITTALS

A. Aggregates

1. Los Angeles abrasion

2. Sieve analysis

3. Plastic limit and plasticity index

4. Liquid limit

PART 2 - PRODUCTS

2.01 AGGREGATE

A. Aggregate shall conform to CALTRANS Standard Specifications Section 26, Class 2, 3/4" gradation.

PART 3 - EXECUTION

3.01 CONSTRUCTION METHODS

A. Construction methods shall conform to CALTRANS Standard Specifications Section 26.

3.02 COMPACTION METHODS

A. Stabilized aggregate base course shall be compacted to not less than 105 percent of maximum dry density, at a moisture content from one (1) to three (3) percent above optimum, as determined by AASHTO T 99, Method A.

B. Field tests shall be taken as required in Section 02250, paragraphs 1.04.A.2., 1.04.B., 1.04.C.3., and 1.04.D.

END OF SECTION

SECTION 02601

MANHOLES AND CLEANOUTS

PART 1 - GENERAL

1.01 DESCRIPTION

A. This section covers the requirements for manholes and cleanouts.

1.02 SUBMITTALS

A. The Contractor shall submit manufacturer's specifications, dimensions and other data for the following:

1. Precast concrete manhole sections (if used)

2. Cast iron frame and cover

3. Cleanout body and plug

PART 2 - PRODUCTS

2.01 MANHOLES

A. Manholes shall be poured-in-place concrete or precast concrete.

2.02 PORTLAND CEMENT CONCRETE

A. Cast-in-place concrete shall be composed of portland cement, fine aggregate, coarse aggregate and water proportioned and mixed to produce a plastic, workable mixture.

B. Ready-mixed concrete shall conform to AASHTO M 157.

C. Portland Cement shall meet the requirements of AASHTO M 85, Type IIA.

D. Water shall be clean, fresh, drinkable and practically free from oil, salt, acid, alkali, organic matter or other substances injurious to the finished product.

E. Concrete shall be air-entrained (5 to 7 percent air content) with an admixture conforming to AASHTO M 154.

F. Fine Aggregate:

1. Fine aggregate shall meet the requirements of AASHTO M 6.

2. In general, fine aggregate shall consist of natural sand having hard, strong, durable particles free from deleterious substances and meeting the following gradation requirements:

Sieve	Mass-Percent Passing
3/8 in	100
No. 4	95-100
No. 16	45-80
No. 50	10-30
No. 100	2-10

3. Fine aggregate shall constitute approximately 30 to 35 percent of the total aggregate used.

G. Coarse Aggregate:

1. Coarse aggregate shall meet the requirements of AASHTO M 80.

2. Coarse aggregate shall consist of gravel, crushed gravel or crushed stone.

3. Gradation of coarse aggregate shall conform to the requirements of AASHTO M 43, Size Number 57:

Sieve	Mass-Percent Passing
1-1/2 in.	100
1 in.	95-100
1/2 in	25-60
No. 4	0-10
No. 8	0-5

4. Maximum allowable percent of deleterious substances shall meet the requirements of AASHTO M 80, Class B.

H. Proportioning and Design of Mixes:

1. Class "A" Concrete

   a. Cement - 6.0 bags or 564 pounds

   b. Maximum water-cement ratio - 0.49 lb. per lb.

   c. Slump - 4 inches

d. Minimum compressive strength of cylinders - 3,500 lbs. per square inch.

2. Class "B" Concrete

a. Cement - 5.0 bags or 470 pounds

b. Maximum water-cement ratio - 0.58 lb. per lb.

c. Slump - 4 inches

d. Minimum compressive strength of cylinders - 3,000 lbs. per square inch.

2.03 PORTLAND CEMENT MORTAR

A. Portland cement mortar shall consist of cement, fine aggregate and water.

B. Portland Cement - See Paragraph 2.02.C.

C. Water - See Paragraph 2.02.D.

D. Fine Aggregate - See Paragraph 2.02.F.

E. Proportioning of Mixes:

1. The proportions of Portland cement, fine aggregate and water shall produce a plastic mortar.

2. One sack of cement weighing 94 pounds shall be considered one cubic foot.

3. Class "C" mortar: 2 parts by volume of fine aggregate per 1 part cement.

4. Class "D" mortar: 2.5 parts by volume of fine aggregate per 1 part cement.

F. Lime:

1. Lime which has been thoroughly air slaked may be added in lieu of up to ten (10) percent of the cement content of the mix, to increase the workability of the mortar.

2. Lime shall conform to ASTM C 141.

2.04 PRECAST MANHOLE SECTIONS

A. Precast reinforced concrete manhole sections shall conform to AASHTO M 199.

B. Joints between precast sections shall have rubber ring gaskets.

C. Riser sections shall have an inside diameter of 48 inches.

D. Cone section shall taper from an inside diameter of 48 inches to an inside diameter of 29 inches.

2.05 MANHOLE BRICK

A. Manhole brick shall meet the requirements of AASHTO M 91, Grade MS.

2.06 MANHOLE STEPS

A. Manhole steps shall be a minimum of 5-1/2" wide of wrought iron, galvanized, and not less than 1-1/8" diameter.

2.07 CASTINGS

A. Gray iron castings shall conform to ASTM A 48. Castings shall be equal to or better than Class No. 30.

B. Castings shall be free from pouring faults, sponginess, cracks, blowholes, and other defects, shall be filleted at angles, and the arrises shall be sharp and true. All castings shall be free from warp and shall be true to the shape and dimension required. All covers fitting into frames shall fit properly, and seat uniformly and solidly.

2.08 CLEANOUT

A. Cleanout shall be coated cast iron standard ferrule cleanout body with a bronze plain countersunk threaded plug.

B. Pipe for cleanout riser shall be cast iron soil pipe as specified in Specification Section 02722: Sanitary Sewer and Acid Waste Systems.

C. Size:

1. Same size as main line up to four (4) inch diameter pipe size.

2. Six (6) inch minimum for larger than four (4) inch diameter pipe size.

D. The cleanout ferrule shall be attached to the riser with a suitable coupling.

PART 3 - EXECUTION

3.01 MANHOLE BASES AND INVERTS

A. The concrete in manhole bases shall be Class "B".

B. Invert Channels:

1. The invert channels shall be smooth and semicircular in shape conforming to the inside of the adjacent sewer section.

2. Changes in direction of flow shall be made with a smooth curve of as large a radius as the size of the manhole will permit.

3. Changes in the size and grade of the channels shall be made gradually and evenly.

4. The invert channels shall be formed directly in the concrete of the manhole base, or shall be half tile laid in concrete, or shall be constructed by laying a full section of sewer pipe through the manhole and breaking out the top half after the surrounding concrete has hardened.

C. The floor of the manhole outside the channels shall be smooth and shall slope toward the channels not less than one (1) inch per foot nor more than two (2) inches per foot.

3.02 POURED-IN-PLACE MANHOLES

A. Poured-in-place manholes shall have reinforced concrete walls of Class "B" concrete.

B. Forms shall be accurately made of steel sheets and shapes of ample strength to form dense watertight walls to true dimensions.

C. Concrete shall be deposited in evenly distributed layers of about 18 inches, with each layer vibrated to bond it to the preceding layer.

D. Mortar for finishing and sealing shall be Class "C". Any honeycombing less than 2 inches deep shall be repaired using Class "D" mortar.

3.03 PRECAST MANHOLES

A. Manhole base shall have a diameter 8 inches greater than the outside diameter of the riser sections.

B. Pipe Connections:

1. Openings for pipes shall be shop scored four inches larger in diameter than the outside diameter of the pipe.

2. Space between pipe and opening shall be filled with mortar.

C. All lifting holes shall be filled with mortar.

3.04 SETTING MANHOLE FRAME

A. Manhole frame shall be brought to grade by a surface ring of brick masonry.

1. Surface ring shall be constructed of manhole brick and Class "D" mortar.

2. All brick shall be laid in a full bed of mortar and all joints shall be shoved joints, completely filled with mortar.

3. Interior and exterior surfaces of the surface ring shall have a 1/2 inch plaster coat.

B. Frame shall be accurately and carefully placed to the exact grade required.

C. Frame shall have a full bearing and shall be level.

D. The top of the frame shall be flush with the surrounding surface ring.

3.5 CLEANOUT

A. Cleanouts shall be installed at finish grade where indicated on the Drawings.

B. Cleanout ferrules shall be caulked into hub and closed with brass screw plug.

C. An 24" square by 6" thick concrete pad shall be poured around cleanout ferrules not installed in a surfaced area.

END OF SECTION

SECTION 02610

PIPE AND FITTINGS - GENERAL

PART 1 - GENERAL

1.01 RELATED DOCUMENTS

A. Drawings and general provisions of Contract, including General and Supplementary Conditions and Division-1 Specification sections, apply to work of this section.

1.02 DESCRIPTIONS

A. This section covers the general requirements for the installation of piping and pipelines.

1.03 QUALITY ASSURANCE

A. The Contractor shall inspect materials delivered to and unloaded at the site.

B. The Contractor shall reject damaged or defective materials, and such pipes or appurtenances that do not conform to the specified requirements, mark, remove from site, and replace with new materials at no additional cost to Sandia.

1.04 PRODUCT DELIVERY, STORAGE, AND HANDLING

A. Pipe, fittings, and accessories shall be handled so as to insure delivery in sound undamaged condition. Particular care shall be taken to avoid injuring the pipe coating and lining.

B. Pipe and fittings shall be carried into position, and not dragged. Use of pinch bars or tongs will be permitted only on bare ends of pipe.

C. Materials shall be stored in a manner approved by the manufacturer. Rubber gaskets shall be stored in a cool, dark place.

PART 2 - PRODUCTS

Not Applicable.

PART 3 - EXECUTION

3.01 PIPE INSTALLATION

A. All required joints shall be complete with all joint accessories.

B. Cutting of pipe for inserting fittings or closure pieces shall be done in a neat and workmanlike manner, without damage to the pipe and so as to leave a smooth end at right angles to the axis of the pipe. Field-cut pipe lengths shall be filed or ground to resemble the spigot end of such pipe as manufactured. Cut pipe shall be marked before joint assembly to assure that the spigot end is inserted to the full depth of the joint.

C. Pipe and appurtenances shall be protected during handling against impact shocks and free-fall. Under no circumstances shall pipe or appurtenances be dropped or dumped into the trench or onto the ground.

D. All pipe and appurtenances shall be unloaded as near to their point of installation as possible. Locate pipe and fittings on the side of the trench opposite the excavated material. If trench has not been excavated, locate pipe and fittings in such position that they will not interfere with the operation of trenching equipment.

E. Do not string out pipe or fittings in advance of installation in areas where damage to the pipe or fittings may result due to construction equipment or activities.

F. All pipe and fittings shall be carefully examined for cracks and other defects while suspended above the trench immediately before installation in final position. Damaged or defective pipe or fittings shall be marked and laid aside for inspection by the Sandia Delegated Representative who will decide if corrective repair is possible, or if replacement is necessary. Any corrective repair work shall be subject to the Sandia Delegated Representative approval. No pipe or fitting which the Sandia Delegated Representative has rejected or is known to be defective shall be laid. Any rejected or defective item shall be removed and replaced at the Contractor's expense.

G. Prior to lowering pipe and fittings into the trench, the interior portions shall be cleared of all dirt and superfluous materials. All lumps, blisters, and excess coating shall be removed from the joint end of each pipe and fitting. Jointing portions of each pipe shall be thoroughly cleaned to remove oil, grit, and other foreign matter.

H. The full length of each section of pipe shall rest solidly on the prepared foundation, with recesses excavated for bells, couplings, and joints. If the foundation is disturbed, the pipe shall be removed and relaid.

I. Ledge rock, boulders, and large stones shall be removed to provide a clearance of at least 6 inches below and on all sides of pipe, fittings, and appurtenances.

J. Every precaution shall be taken to prevent foreign material from entering the pipe and fittings while being placed in the line. If the pipe laying crew cannot put the pipe or fittings into the trench and in place without getting earth into it, the Contractor shall, before lowering into the trench, place a heavy, tightly woven canvas bag of suitable size over each end. During laying operation, no materials shall be placed in the pipe.

K. Pipe and fittings shall be carefully lowered into the trench, piece by piece, by means of mechanical equipment or the necessary manpower in such a manner as to prevent any damage. If damage occurs, the Sandia Delegated Representative will decide if corrective repair is possible or if replacement is necessary. Any corrective repair work shall be subject to the Sandia Delegated Representative approval.

L. Maximum allowable deflections from a straight line or grade, as required by vertical curves, horizontal curves, or offsets, shall be 5 degrees per joint unless a lesser amount is recommended by the manufacturer.

M As soon as possible after the joint is made, sufficient backfill material shall be placed along each side of the pipe to offset conditions that might tend to move the pipe off line and grade. No pipe shall be brought into position until the preceding length has been secured in place.

N. At times when work is not in progress, open ends of pipe or fittings shall be securely closed to prevent entry of water, earth, or other foreign objects.

3.02 JOINTS

A. Pipe sections shall be joined in accordance with the manufacturer's recommendations. Gaskets and joint rings shall be lubricated before assembly. The gasket position shall be checked after the joint has been completed, using a feeler gauge. All exposed piping shall have flanged joints unless shown or specified otherwise. The maximum deflection in joints of pipe shall not exceed the deflection recommended by the manufacturer of the pipe. Flanged joints shall have no deflection.

B. The inside and outside of concrete pipe joints shall be protected with rich cement mortar, using fabric diapers or other methods recommended by the pipe manufacturer. Care shall be taken to insure that the interior mortar forms a smooth and continuous surface between pipe sections, and that the exterior mortar covers all metal parts of the joint rings.

3.03 CONNECTIONS TO EQUIPMENT

A. Piping shall be connected to pumps and other equipment so as not to induce stresses in the piping system. Unless otherwise specified, connections to pumps and equipment shall be flanged with the raised face machined off, and a full gasket used.

3.4 ECCENTRIC REDUCERS

A. Eccentric reducers shall be provided where air or water pockets could occur due to a change in pipe size.

3.5 NEW AND EXISTING SEWER LINES

A. Where new and existing sewer lines cross potable water lines, the sewer line shall be cast iron or ductile iron pipe for a distance of 10 feet either side of the crossing. The Contractor shall replace existing sewer lines which are not cast or ductile iron in accordance with the above.

END OF SECTION

SECTION 02630

STORM SEWERAGE

PART 1 - GENERAL

1.1 DESCRIPTION

A. This section covers the requirements for the installation of the storm sewerage systems.

1.2 SUBMITTALS

A. Manufacturers Catalog Data:
   1. Polyvinyl Chloride Pipe (PVC) plastic piping including fittings and jointing materials.

B. Testing certificates as required by ASTM D 2412 and ASTM 3212.

1.3 QUALITY ASSURANCE

A. Pipe Tests
   1. PVC Pipe - ASTM D 2412

B. Gasket Tests
   1. PVC Pipe - ASTM D 3212

PART 2 - PRODUCTS

2.1 PVC PIPE (12" AND SMALLER)

A. PVC pipe fittings shall conform to ASTM D 3034, SDR 35 with ends suitable for elastomeric gasket joints.

B. Joints shall conform to ASTM D 3212. Gaskets shall conform to ASTM F 477.

2.2 MANHOLES

A. Manholes shall be in accordance with applicable portions of Section: MANHOLES AND CLEANOUTS.

PART 3 - EXECUTION

3.1 PIPE INSTALLATION - GENERAL

A. Inspect each pipe and fitting before and after installation; replace those found defective and remove from site. Provide proper facilities for lowering sections of pipe into trenches. Lay nonpressure pipe with the bell ends in the upgrade direction. Adjust spigots in bells to give a uniform space all around. Blocking or

wedging between bells and spigots will not be permitted. Replace by one of the proper dimensions, pipe or fittings that do not allow sufficient space for installation of joint material. At the end of each work day, close open ends of pipe temporarily with wood blocks or bulkheads. Provide batterboards not more than 25 feet apart in trenches for checking and ensuring that pipe invert elevations are as indicated. Laser beam method may be used in lieu of batterboards for the same purpose.

3.2 SPECIAL REQUIREMENTS

A. PVC Pipe: Install pipe and fittings in accordance the requirements of ASTM D 2321.

3.3 MANHOLES INSTALLATION

A. Manhole installation shall be in accordance with applicable portions of Section: MANHOLES AND CLEANOUTS.

END OF SECTION

SECTION 02644

FIRE HYDRANTS

PART 1 - GENERAL

1.01 RELATED DOCUMENTS

A. Drawings and general provisions of Contract, including General and Supplementary Conditions and Division-1 Specification sections, apply to work of this section.

1.02 DESCRIPTION

A. This section covers requirements for fire hydrants for use in public water supply systems or firelines.

1.03 QUALITY ASSURANCE

A. Fire Hydrant Testing and Inspection

1. Fire hydrants shall be tested and inspected by the Manufacturer as required by the latest revision of AWWA C 503.

1.04 SUBMITTALS

A. Fire hydrant manufacturer's certification stating the following:

1. The fire hydrant and material used in its construction conform to the applicable requirements of the latest revision of AWWA C 503.

2. The tests required by the latest revision of AWWA C 502 have been made and all test requirements have been met.

B. Each certification submitted shall be signed by an agent of the Manufacturer.

C. Fire hydrant manufacturer's specifications and other data for the fire hydrants supplied.

PART 2 - PRODUCTS

2.01 GENERAL

A. Fire hydrants shall be the "wet-barrel" type conforming to the latest revision of AWWA C 503.

B. Fire hydrants shall be UL/FM approved.

C. Fire hydrants shall be of recognized manufacturer and shall conform to manufacturer's standard patterns.

2.02 COORDINATION WITH SANDIA

A. The Contractor shall coordinate with the Sandia Delegated Representative before purchasing fire hydrants to determine the following:

1. Hose nozzle threading

2. Pumper nozzle threading

3. Operating nut size and shape

4. Direction of opening

5. Color and type of paint to be applied to the outside of the hydrant top sections.

2.03 HYDRANT DESIGN

A. Main valves shall have an opening of 5-1/4 inch nominal diameter.

B. Fire hydrants shall have two 2-1/2 inch hose nozzles spaced 90 degrees apart and one 4-1/2 inch pumper nozzle spaced 45 degrees in between the hose nozzles.

C. Bury length shall be 4-1/2 feet.

D. Fire hydrants shall have two-piece barrels with ground flange. The flange shall contain at least eight bolts to permit proper orientation of nozzles.

E. Inlet connection shall be 6 inch mechanical joint.

F. Nozzles shall be complete with caps, cap gaskets, and chains.

G. Hydrant shall be a Mueller Hi-flo A-480-H type or approved equal.

PART 3 - EXECUTION

3.01 INSTALLATION

A. Hydrants shall be set plumb with the pumper outlet facing the roadway.

B. The distance from the centerline of the pumper nozzle to the finished grade shall be a minimum of 18 inches and a maximum of 24 inches.

C. The distance from the center of the hydrant to the operating stem of the hydrant-branch gate valve shall be a minimum of 3 feet and a maximum of 5 feet.

D. Hydrant shall be blocked with a plug-type concrete bearing thrust block.

E. Fire hydrants shall be installed in accordance with the requirements of the applicable sections of the latest revision of AWWA C600.

END OF SECTION

SECTION 02651

STORM DRAINAGE SYSTEM - ROOF

PART 1 - GENERAL

1.01 DESCRIPTION

A. This section covers the general requirements for the installation of a complete storm drainage system as shown on the drawings, schedules, and specified herein.

B. The Contractor shall coordinate the storm drainage system with architectural, structural, mechanical and electrical requirements of the project.

C. Storm drainage system shall be considered as part of the interior construction to a point 5 feet beyond the building walls, unless indicated otherwise.

1.2 CODE REQUIREMENTS

A. The Contractor shall comply with requirements of local and national plumbing codes.

PART 2 - PRODUCTS

2.01 MATERIALS

A. Piping Materials shall be ductile iron pipe as specified in Specification Section 02713: Domestic Water System.

B. Roof, deck, and area drains shall conform to applicable portions of Specification Section 15405: Soil, Waste, and Vent Piping System.

C. Cleanouts, backwater valves, and expansion joints shall be compatible with piping material.

PART 3 - EXECUTION

3.01 INSTALLATION

A. Piping shall be installed to conform to the sizes and location shown on drawings. Unless otherwise indicated, piping shall be installed parallel or perpendicular to the building construction. An allowance for expansion shall be provided. When pipe is installed underground, excavation shall be to a minimum depth to

accomplish the grade shown or required by code. Underground pipe shall have bearing along its entire length.

B. Pipe shall be supported from the building structure with clevis type hangers. Vertical risers shall be supported at each floor line with steel pipe clamps.

3.02 TEST

A. A hydrostatic test shall be applied to the entire storm drainage system. The test shall comprise the plugging of all openings in the system, filling the system, or portion thereof, with water to the roof level or a minimum of 10', examining for leakage, and repairing leaks, until all joints are proven tight.

END OF SECTION

SECTION 02653

FUEL STORAGE TANK

PART 1 - GENERAL

1.01 DESCRIPTION

A. This section covers the requirements for an aboveground fuel storage tank.

PART 2 - PRODUCTS

2.01 TANK

A. The tank shall be a Steel cylindrical-shaped aboveground storage tank suitable for No. 2 diesel fuel.

2.02 PIPING & CONNECTIONS

A. Diesel fuel piping below grade shall be red thread glass fiber, reinforced epoxy pipe, RTP-70, and fittings, as manufactured by A. O. Smith-Inland Inc. Pipe shall be installed with adapters and flexible connectors at tank connections and where required for protection against movement and expansion. Installation shall comply with manufacturer's recommendations.

B. Diesel fuel piping above grade shall be Schedule 80, extra strong, seamless, steel pipe with extra strong screwed fittings.

PART 3 - EXECUTION

3.01 INSTALLATION

A. Installation shall be as indicated on the drawings and details.

END OF SECTION

SECTION 02700

SITE IRRIGATION SYSTEM

PART 1 - GENERAL

1.01 RELATED DOCUMENTS

A. Drawings and general provisions of Contract, including General and Supplementary Conditions and Divisions-1 Specifications, apply to work of this section.

1.02 SCOPE OF WORK

A. General:

1. Work shall include the complete installation of the underground irrigation system. Components include (but are not limited to) piping, sprinkler heads, valves, controller, controller wiring, fittings, electrical connections, and all necessary accessories. Provide all labor, materials, and needed equipment to complete the system as shown on drawings.

1.03 CODES, RULES AND SAFETY

A. All work and materials to be in full accordance with the latest rules and regulations of safety orders of Division of Industrial Safety; the Uniform Plumbing Code published by the Western Plumbing Officials Association. Nothing in these drawings or specifications is to be construed to permit work not conforming to these codes. Should the construction documents or instructions be at variance with the aforementioned rules and regulations, notify the Sandia Delegated Representative and get his instructions before proceeding with the work affected.

1.04 WORK COORDINATION

A. Schedule and coordinate to facilitate the most expeditious completion of the project in a workmanlike manner.

B. Consult all other relevant specification sections to determine the extent of work specified elsewhere but related to that included herein.

C. Schedule and coordinate all required irrigation utility connections with other project trades and/or utilities companies.

D. Obtain information pertaining to location of all proposed lines and accessories prior to irrigation installation.

E. Contractor shall assume responsibility for locating all site utilities, and perform work in a manner to avoid damage.

1.05 QUALITY ASSURANCE

A. Irrigation contractor shall have technical qualifications, trained personnel, and experience required to perform the work as specified.

B. Irrigation contractor shall have been engaged in irrigation design and installation for at least four years.

1.06 SUBMITTALS

A. Submit manufacturer's catalog cuts, specifications, and operating instructions of the complete list of materials and assemblies to be installed.

1.07 SUBSTITUTIONS

A. Specific reference to manufacturer's names and products specified in this section are used as standards, but this implies no right to substitute other material or methods without approval of the Sandia Delegated Representative.

B. Installation of any approved substitution is the Contractor's responsibility. Any changes required for installation of any approved substitution must be made to the satisfaction of the Sandia Delegated Representative and without additional cost to Sandia.

C. For any proposed substitute irrigation head type, the Contractor shall submit complete friction loss calculations for each affected zone, including head type, nozzle size, and GPM's for each head. The following design criteria shall be used as guidelines:

1. Irrigation system shall provide 100% coverage for all irrigated areas. Head to head spacing shall be used in turf areas.

2. Pipe sizes, valve sizes, and zone operation schedule shall provide an economic and efficient system.

3. In sizing lines, allow for pressure loss due to meters, valves, backflow preventer, pipe and fittings, and all applicable factors. Flow velocities for all

lines shall not exceed 5 feet per second. Pressure available at each head shall be at least the minimum specified by the manufacturer, and shall not exceed the maximum.

1.08 PROTECTION OF EXISTING CONDITIONS

A. Any existing structures, equipment, utilities, pavement, landscaping, etc., damaged by Irrigation Contractor during the course of the work, including any subsequent damage caused by leakage or settling of piping shall be restored at Contractor's expense and to the Sandia Delegated Representative's satisfaction.

1.09 IDENTIFICATION

A. Provide underground-type plastic line markers, manufacturer's standard permanent, bright-colored, continuous printed plastic tape, intended for direct burial service; not less than 6" wide x 4 mils thick. Provide blue tape with black printing reading "CAUTION WATER LINE BURIED BELOW".

1. Manufacturers: Allen Systems, Ebed, or Seton Name Plate.

2. Install continuous line markers located directly over buried pressure lines at 6" to 8" below finished grade, during backfilling/topsoiling operations.

PART 2 - PRODUCTS

2.01 MAIN LINE

A. Piping on pressure side of irrigation control valves:

1. Polyvinyl chloride (PVC) 1120-1220, Schedule 40, and conform to ASTM D1785.

2. Copper pipe: Seamless copper water tube, ASTM B88, Type "K", drawn temper.

2.02 LATERALS

A. Piping on nonpressure side of irrigation control valves:

1. Polyvinyl chloride (PVC) 1120-1220, Schedule 40, and conform to ASTM D1785.

2. Flexible vinyl chloride conforming to ASTM D2287.

2.03 FITTINGS

A. Fittings for Solvent Welded Pipe: Schedule 40, polyvinyl chloride, standard weight, as manufactured by Sloane, Lasco, or approved equal, to meet ASTM D2466 and D2467.

B. For copper tubing, ANSI B16.22 wrought copper or cast brass, recessed solder joint type fittings.

2.04 NIPPLES

A. Nonferrous: Schedule 40 red brass (85% copper, 15% zinc), with MIPT at both ends; ASTM B43.

B. Plastic: Schedule 80, Type I, Grade 1 polyvinyl chloride (PVC); threaded both ends; ASTM D1784 and D1785; uniformly gray in color.

C. Flexible: Factory-made consisting of flexible polyvinyl chloride hose fitted at each end with Schedule 40 PVC male adapters; test rated at 200 psi static.

2.05 SPRINKLER HEADS

A. Provide heads as indicated on drawings.

2.06 CONTROL VALVES

A. Remote-control section valves are to be electric, constructed of non-corrosive Cycolac. The valve shall open and close at low flow and pressure. Operating range is to be 10-150 psi.

2.07 CONTROLLER

A. Electro-mechanical controller, manufactured by Irri-trol, Buckner, or Rainbird with the following features:

1. Provide capacity for at least two more stations than number of zone valves shown on drawings.

2. Adjustable clock monitors, with 14-day calendar cycle.

3. Sequence timer with independently variable time for each station, with a time range of 0-60 minutes.

4. Semi-automatic cycle can be started manually without disturbing clock setting. Reset for the next operation should be automatic.

5. Master on-off switch.

6. Dual programming, allowing any zone to be omitted from the cycle on any day from the calendar program.

2.08 QUICK-COUPLING VALVES

A. Install as shown on drawings.

B. Provide six valve keys fitted with 3/4" swivel hose cells.

2.09 VALVE BOXES

A. Install section valves in Ametek Jumbo Box, green color.

2.10 CONTROL WIRE

A. Copper with UL approval for direct burial in the ground, size #14-1. Common ground wire, white insulating jacket; control wire, jacket of color other than white. Splice with heat-shrink nylon wire connectors, #333576 Scotchlok seal packs or equal.

PART 3 - EXECUTION

3.01 LAYOUT

A. Lay out work as accurately as possible to the drawings. Drawings are diagrammatic to the extent that swing joints, offsets, and all fittings are not shown.

B. Full and complete coverage is required, make necessary minor adjustments to layout required to achieve full coverage of irrigated areas at no additional cost to Sandia.

C. Where connections to existing stubouts are required, make necessary adjustments in layout to connect should stubs not be located exactly where shown. Adjust layout as necessary to install around existing work.

D. Where piping is shown under paved areas but running parallel and adjacent to planted areas, install piping in planted areas. Do not install directly over another line in same trench.

E. Do not locate control valves in swales where water will be directed into the valve box. Relocate valve as approved by the Sandia Delegated Representative.

3.02 EXCAVATING AND TRENCHING

A. Perform excavations as required for installation of work, including shoring of earth banks, if necessary. Restore all surfaces, existing underground installations, etc., damaged or cut as a result of the excavations, to their original condition.

B. Dig trenches wide enough to allow a minimum of 6" between parallel pipelines. Trench sufficient depth to provide minimum cover from finish grade as shown on drawings.

3.03 SLEEVING

A. Install sleeves where control wires and pipes pass through or under walls.

B. Install sleeves for control wiring and pipe under walks and paving as shown on the drawings and as required to facilitate a smooth construction sequence.

C. Sleeves to be size shown on drawings and extend a minimum of 12" beyond edges of walls, walks, and paving.

D. Coordinate sleeve installation with other trades as required.

3.04 PIPE INSTALLATION

A. Install pipe in accordance with manufacturer's instructions.

1. Solvent-weld PVC pipe and fittings, using primer, solvents, and methods recommended by manufacturer, except where screw connections are required. Clean pipe and fittings of dirt and moisture before assembly. Snake pipe from side to side of trench bottom to allow for expansion and contraction. Make all connections between PVC pipe and metal valves or pipe with threaded fittings using PVC male adapters.

2. Use Permatex pipe joint compound (#51D) on threaded PVC fittings, except for sprinklerheads. Use Teflon tape only on threaded joints of sprinklers. Assemble threaded PVC fittings finger-tight plus one to two turns; no more.

3.05 SPRINKLER HEADS

A. Install full-circle rotary popup sprinkler heads as detailed. Install part-circle rotary popup sprinkler heads 1" from edge and flush with top of adjacent walks, curbs, or paved areas at time of installation. Install on a swing joint assembly where adjacent to curbs.

3.06 ZONE VALVES

A. Remote Control Valves: Install control valves in valve boxes where shown and group together where practical. Place no closer than 12" to walk edges, buildings, and walls. Limit one control valve per box. Set valve boxes flush with finish grade and as detailed.

3.07 CONTROLLER

A. Install per local code and manufacturer's instructions.

B. Connect remote control valves to controller in clockwise sequence to correspond with station setting beginning with Stations 1, 2, 3, etc.

C. Affix a non-fading copy of irrigation diagram to cabinet door. Irrigation diagram to be sealed between two sheets of 20 mil (min.) plastic. Irrigation diagram shall be a copy of the as-built drawing and shall show clearly all valves operated by the controller, showing station number, valve size, and type of planting irrigated.

3.08 CONTROL WIRING

A. Install control wires with sprinkler mains and laterals in common trenches wherever possible. Lay to the side of pipeline and tie wires in bundles at 10' intervals and allow slack for contraction between ties.

B. Provide a minimum of 3' of looped extra ground and control wire at each valve and at 200' intervals on long wire runs. Snake wires in trench to allow for contraction of wires.

C. Control wire splices at remote control valves to be crimped and sealed with Scotchlok. Line splices will be allowed only on runs of more than 2500' and be done only in a valve box.

D. Install one additional wire of a different color in wire bundles for potential connection to controller. Run from furthest valve to controller without splices.

More than one wire may be required due to branching of main line. Loop 36" excess wire into single valve boxes and into one valve box in each group of valve boxes.

3.09 FLUSHING AND TESTING

A. Cap or plug all openings as soon as lines have been installed to prevent entrance of materials that would obstruct the pipe. Leave in place until removal is necessary for completion of installation.

B. Thoroughly flush out all water lines before installing heads, valves, and other hydrants.

C. Testing:

1. Make hydrostatic tests with risers capped when welded PVC joints have cured at least 24 hours. Center load piping with backfill to prevent pipe from moving under pressure. Keep all couplings and fittings exposed. Apply continuous static water pressure of 100 psi as follows:

    a. Test all piping on the pressure side of control valves for 4 hours.

2. Repair leaks resulting from tests and repeat tests until system is approved by the Sandia Delegated Representative.

3. Submit written request for inspections to Sandia Delegated Representative at least 48 hours prior to anticipated review.

    a. Review of completed installation will be made by Sandia Delegated Representative prior to backfilling of trenches and will be made during hydrostatic testing.

4. Upon satisfactory completion of testing, complete assembly and adjust all heads for proper arc and radius.

3.10 BACKFILL AND COMPACTING

A. After system is operating and required tests and inspections have been made, backfill excavations and trenches with clean soil, free of rubbish.

B. Backfill for all trenches, regardless of the type of pipe covered, shall be compacted to minimum 95% density under pavements, 85% under planted areas.

C. Compact trenches in areas to be planted by thoroughly flooding the backfill. Jetting process may be used in those areas.

D. Dress off all areas to finish grade.

3.11 CLEANUP

A. Keep areas of work clean, neat, and orderly at all times. Keep paved areas clean during installation. Clean up and remove debris from the entire work areas prior to final acceptance to the satisfaction of the Sandia Delegated Representative.

3.12 ACCEPTANCE AND WARRANTY

A. Acceptance

1. Demonstrate operation of all irrigation zones for the Sandia Delegated Representative. All irrigated areas are to have 100% coverage. Contractor shall add additional heads, as necessary, at no cost to Sandia. Adjust all heads as required for proper operation, alignment, elevation, radius, and arc.

2. Provide operating instructions for a period of up to two hours.

3. Upon acceptance of the irrigation, Sandia will assume responsibility for operation and maintenance.

4. The Contractor will provide on-site consultation with Sandia's operating personnel for a period of 6 months, not to exceed 4 hours per month, at no cost to Sandia. This consultation will be provided at Sandia's request.

B. Record Information

1. Furnish record drawings of the complete irrigation system in accordance with the general and special conditions. Procure from the Sandia Delegated Representative full-size sepias of contract drawings.

2. Manuals: Prior to final review of the irrigation system, furnish three individually bound service manuals containing complete drawings, diagrams, and spare parts list of all equipment installed, show components and catalog numbers together with the manufacturer's name and address and the following:

   a. Index sheet indicating the Contractor's name, address, and telephone number.

   b. Copies of equipment, warranties, and certificates.

   c. Complete operating and maintenance instructions in sufficient detail to permit operating personnel to understand, operate, and maintain all equipment.

C. Warranty

1. Warranty: In addition to manufacturer's guarantees or warrantees, work shall be warranted for one year from the date of final acceptance against defects in material, equipment, and workmanship. Warranty also covers repair of damage to any part of the premises resulting from leaks or other defects in materials, equipment, and workmanship to the satisfaction of the Sandia Delegated Representative.

END OF SECTION

SECTION 02701

LEAKAGE TESTS

PART 1 - GENERAL

1.01 RELATED DOCUMENTS

A. Drawings and general provisions of Contract, including General and Supplementary Conditions and Division-1 Specification sections, apply to work of this section.

1.02 DESCRIPTIONS

A. This section covers the requirements for performing leakage tests.

B. All structures required to be watertight and all pressure and gravity piping and pipelines shall be tested by the Contractor. All tests shall be conducted in a manner to minimize interference with the progress of the work.

C. The Contractor shall notify the Sandia Delegated Representative when the work is ready for testing and tests shall be conducted as soon as possible thereafter. All labor, equipment, water and materials, including meters and gauges, shall be furnished by the Contractor at his own expense.

PART 2 - PRODUCTS

Not applicable.

PART 3 - EXECUTION

3.01 STRUCTURES

A. Structures shall be tested before backfilling by filling with water to overflowing, or other level as directed by the Sandia Delegated Representative, and observing the water surface level twenty-four hours thereafter. Exterior surfaces shall be examined for leakage. Leakage is within allowable limits for structures when there is no visible sign of leakage and where the water surface does not drop more than 1 inch during the twenty-four hours leakage test. Dampness on the exterior wall surface during the test period will not be considered as leakage, except in the case of prestressed concrete structures.

B. If the leakage exceeds the allowable limit, the work shall be repaired and retested.

3.02 PRESSURE PIPING

A. Piping and other equipment designed to carry fluids under pressure shall be tested as a whole, or in sections valved or bulkheaded at the ends. Testing shall be under a hydrostatic pressure equal to the design pressure, or at a higher test pressure specified in the piping schedule, or individual specification section.

B. Test pressure shall be applied by means of a tap in the pipe or plug. The rate of leakage shall be determined at 15-minute intervals, by means of volumetric measurement of the water added during the test, until the rate has stablized at a constant value for four consecutive 15 minute periods. Test pressure shall be maintained for a period of at least one hour, two hours for fire water mains.

C. All joints in exposed piping shall be examined during the tests and all leaks shall be satisfactorily stopped and retested.

D. All pipelines for compressed air, fuel, and natural gas shall be tested with air. After the tests are complete, fuel and gas lines shall be flushed out with nitrogen or carbon dioxide.

E. Precautions shall be taken to protect control equipment in or attached to pipelines to prevent damage.

F. Tests of insulated and/or concealed piping shall be made before the piping is covered or concealed.

G. No leakage will be allowed under the above tests for process piping in buildings.

H. For pressure pipelines installed in the ground, the rates of leakage shall not exceed the following values:

	Leakage in Gallons Per Inch Diameter, Per Mile, Per 24 Hours
Cast Iron or Ductile Iron	25
Concrete	25
Steel Pipe with Harnessed Joints	10
Steel Pipe with Welded Joints	0
PVC Pipe with Solvent Welded Joints	0

3.03 SEWERS

A. Tests to be made for leakage and infiltration of water into sewers shall be made prior to making connections with other sewers, pipes or drains.

B. Upon completion of the work of any sewer, it shall be tested for watertightness and shall meet the requirements set forth below before final acceptance of the work of the Contract.

1. Tests shall be made by filling the sewer with water and measuring the quantity of leakage from the sewer. The head of water during the tests shall be maintained at least ten feet above the highest section of the work being tested. Where work being tested has been constructed in water bearing soils, leakage tests may, at the discretion of the Sandia Delegated Representative, be made by measuring the quantity of infiltration into the sewer. At the Contractor's option a suitable air test of the lines may be used to determine the watertightness of the system.

2. The allowable leakage or infiltration per twenty-four hours per inch of diameter per mile of sewer tested shall not exceed 200 gallons.

3. All localized or spurting leaks detected in sewers or in floor or walls of appurtenant structures shall be permanently stopped. Should any leaks, defective joints or defective construction be found, they shall be promptly corrected and should any defective pipes or specials be discovered, they shall be removed and replaced in a satisfactory manner at the Contractor's expense.

3.04 GRAVITY PIPING

A. Soil and waste piping inside buildings and structures shall be tested by filling with water to the top of the system, examining for leakage, and repairing the leaks until the system is proven tight. Tests shall be made before the piping is painted, covered, or concealed.

END OF SECTION

SECTION 02711

GAS SYSTEM

PART 1 - GENERAL

1.1 RELATED DOCUMENTS

A. Drawings and general provisions of Contract, including General and Supplementary Conditions and Division-1 Specification sections, apply to work of this section.

1.2 DESCRIPTION

A. This section covers the requirements for installation of the natural gas system.

PART 2 - PRODUCTS

2.1 PIPE AND FITTINGS

A. Polyethylene pipe, tubing, fittings, and joints shall conform to ASTM D 3350 and ASTM D2513, pipe designation PE 3408, rated SDR 11, as specified in ASME B31.8.

B. Fittings for plastic pipe shall be heat-fusion type connections only.

2.2 SERVICE RISERS

A. Service risers for use with plastic pipe shall be “anodeless” type.

PART 3 - EXECUTION

3.1 INSTALLATION

A. The gas piping system shall be installed in accordance with all applicable local codes and in accordance with recognized industry standards and practices.

B. All piping shall be buried a minimum of 24 inches deep and backfilled in accordance with Section: Trench Excavation and Backfill.

C. Plastic gas piping shall be installed for buried conveyance only and shall have a tracer wire. The tracer wire shall be single strand, 10 gauge, coated copper wire. Install wire 8 to 12” above pipeline, terminating 3 to 4” above grade. Do not wrap wire around pipe.

3.2 TESTING

A. Testing shall be in accordance with all applicable local codes. Purge mains and service lines after testing in accordance with ASME B31.8.

END OF SECTION

SECTION 02713

SITE DOMESTIC WATER SYSTEM

PART 1 GENERAL

1.01 RELATED DOCUMENTS

A. Drawings and general provisions of Contract, including General and Supplementary Conditions and Division 1 Specification sections, apply to work of this section as if repeated herein.

1.02 DESCRIPTION

A. This section specifies the site domestic water distribution piping system, to a point 1.5m (5 feet) outside the building.

1.03 SUBMITTALS

A. Refer to Division 1 and Basic Mechanical Requirements for administrative and procedural requirements for submittals.

B. Product Data: Submit manufacturer's product data for all material.

1.04 CODES AND STANDARDS

A. Plumbing Code Compliance: Comply with the California Plumbing Code.

1.05 GENERAL REQUIREMENTS

A. Qualifications of the Contractor: The contractor performing the installation work under this specification shall have a current C-36 or C-34 license in the State of California and shall be regularly engaged in the installation of underground domestic water system piping.

PART 2 PRODUCTS

2.01 PIPE AND FITTINGS

A. Piping outside the building below ground 1.5m (5 feet) outside the building and beyond:

1. Pipe Sizes 20 to 300 mm (3/4” to 12”): PVC schedule 80 piping with solvent weld socket-type PVC schedule 80 fittings. Piping conforming to ASTM D1785. Fittings conforming to ASTM D2467.

2.02 VALVES

A. Gate, globe, angle, ball, butterfly, check, balancing and drain valves are specified in Section 15100 of Division 15.

2.03 BACKFLOW PREVENTION ASSEMBLY (NON-FIRE RISER)

A. Reduced pressure principle type. Preventer assembly shall be approved and listed for the specific use and orientation for which it is to be installed, by Foundation for Cross-Connection Control and Hydraulic Research of the University of Southern California, UL and/or FM approved, FEBCO Model 860, no substitutions.

1. A reduced pressure backflow prevention assembly (RPBP) shall be installed to prevent cross contamination between potable water systems and any other water system.

2. RPBP assemblies installed or used under this contract shall be tested by a "certified backflow control assembly tester" who possesses a current (within three (3) years from date of issuance) certificate that confirms successful completion of an approved (SDR specified or USC-FCCCHR) Training Course.

3. RPBP assemblies shall be installed in accordance with AWWA Manual M14 requirements and their listing.

4. Control valves shall be provided.

5. The installation of RPBP shall provide the following:

a. Easy accessibility for testing and maintenance.

b. Proper support.

c. Provision for excessive pressure or thermal expansion downstream.
d. Placement between 12-inches and 60-inches above grade level.

6. The contractor shall perform an operational test on all new RPBP assemblies with the system designation, location, test performed, tester's initials, and date. All data shall be permanently engraved on a durable plastic or aluminum tag attached to RPBP with a chain. Testing documentation shall be submitted to SDR.

7. Any repairs to RPBPs shall be made with original manufacturer's parts.

2.04 WATER METER

A. Magnetic drive turbine meter with internal strainer, tamper-proof moisture resistant register, bronze case, AWWA C701 Class 1, Neptune High Performance Turbine Meter (1 1/2" – 10") with Neptune TRICON-S Register impulse transmitter having 0.5 amp SPDT switch rating at 250 VDC (10 gallons per pulse).

PART 3 EXECUTION

3.01 EXAMINATION

A. Verify all dimensions by field measurements. Verify that all water distribution piping may be installed in accordance with pertinent codes and regulations, the original design, and the referenced standards.

3.02 PIPING INSTALLATION

A. Refer to the Division 15 Section 15050, "BASIC MECHANICAL MATERIALS AND METHODS", for general piping installation instructions.

B. General Locations and Arrangements: Drawings (plans, schematics, and diagrams) indicate the general location and arrangement of the piping systems. Location and arrangement of piping layout take into consideration pipe sizing and friction loss, expansion, and other design considerations.

C. Install shutoff valve at service entrance inside building; complete with strainer, pressure gage, and test tee with valve.

D. Sectional Valves: Install sectional valves on each branch and riser, close to main, where branch or riser serves 2 or more plumbing fixtures or equipment connections, and elsewhere as indicated.

E. Extend water distribution piping to connect to water service piping, of size and in location indicated for service entrance to building.

F. Install sleeve and mechanical sleeve seal at penetrations through foundation wall for watertight installation.

G. Connections to supply mains:

1. Connections shall be made either by cutting the supply main, inserting a standard tee and sleeve, and installing the control valve; or by tapping the supply main while under pressure, using an approved tapping sleeve (saddles are not permitted) and valve. When the tapping method is used, the removed discs shall be turned over to the SDR. Submit tapping method to the SDR.

2. Connections requiring water shutdowns shall be performed during nonstandard working hours as directed by the SDR. Interruption of utilities shall conform with the requirements of the "General Material and Work Requirements, Mechanical" Section 15050 of the specification.

3. Impairments to underground yard mains, hydrants, water supplies and any water based extinguishing system shall be coordinated between the Contractors and the SDR in

accordance with SNL Fire Protection Impairment Procedures.

4. The underground pipe connecting domestic water systems to the water-supply main shall be sloped 3 mm/m (1/8-inch per foot) from the water-supply main to the point of entry into the building. There shall be no high points in the piping where air pockets can form.

3.03 FIELD QUALITY CONTROL

A. Inspections: Do not enclose, cover, or put into operation water distribution piping system until it has been inspected and approved by the SDR. Notify the SDR at least 24 hours prior to the time such inspection must be made. Perform tests specified below in the presence of the SDR.

1. Rough-In Inspection: Arrange for inspection of the piping system before concealed or closed-in after system is roughed-in, and prior to setting fixtures.

2. Final Inspection: Arrange for a final inspection by the SDR to observe the tests specified below.

B. Reinspections: Whenever the SDR finds that the piping system will not pass the test or inspection, make the required corrections and arrange for reinspection by the SDR.

C. Reports: Prepare inspection reports, signed by the contractor. Submit reports to Sandia Delegated Representative.

D. Piping System Test:

1. Test for leaks and defects in all new water distribution piping systems and parts of existing systems, which have been altered, extended or repaired. If testing is performed in segments, submit a separate report for each test, complete with a diagram of the portion of the system tested.

2. Leave uncovered and unconcealed all new, altered, extended, or replaced water distribution piping until it has been tested and approved. Expose all such work for testing, that has been covered or concealed before it has been tested and approved.

3. Cap and subject the piping system to a static water pressure of 150% of above the operating pressure without exceeding the pressure rating of the piping system materials. Isolate the test source and allow to stand for a period of two hours. Leaks and loss in test pressure constitute defects which must be repaired.

4. Repair all leaks and defects using new materials and retest system or portion thereof until satisfactory results are obtained.

5. Prepare reports for all tests and required corrective action.

3.04 CLEANING AND DISINFECTING

A. Purge all new water distribution piping systems and parts of existing systems, which have been altered, extended, or repaired prior to use. The cleaning and disinfecting shall be performed by a contractor specializing in sterilization work.

B. Use the purging and disinfecting procedure described in either AWWA C651, or AWWA C652, or as described below:

1. Flush the piping system with clean, potable water until dirty water does not appear at the points of outlet.

2. Fill the system or part thereof, with a water/chlorine solution containing at least 50 parts per million of chlorine. Isolate (valve off) the system, or part thereof, and allow to stand for 24 hours.

3. Drain the system, or part thereof, of the previous solution, and refill with a water/chlorine solution containing at least 200 parts per million of chlorine and isolate and allow to stand for 3 hours.

4. Following the allowed standing time, flush the system with clean potable water until chlorine content is less than 0.2 PPM in the water coming from the system.

5. Submit water samples in sterile bottles to the SDR. Repeat the procedure if the biological examination made by the authority shows evidence of contamination.

C. Reports: Prepare reports for all purging and disinfecting activities. Provide certificate and California Analysis on bacteriological certifying that domestic water system has been properly disinfected.

END OF SECTION

SECTION 02717

SITE FIRE WATER SYSTEM

PART 1 GENERAL

1.01 RELATED DOCUMENTS

A. Drawings and general provisions of Contract, including General and Supplementary Conditions and Division 1 Specification sections, apply to work of this section as if repeated herein.

B. Refer to sections 15330 and 15331 for further details.

1.02 DESCRIPTION

A. This section specifies the site fire water system piping, valves, fittings, and thrust restraints outside and inside the building below ground to a point at the flanged stub-up at the base of the fire sprinkler system riser. The site fire protection water system is defined as any underground water piping, valves, fittings, and thrust restraints which feed a fire sprinkler system or fire hydrant.

1.03 SUBMITTALS

A. Refer to Division 1 and Basic Mechanical Requirements for administrative and procedural requirements for submittals.

B. Product Data: Submit manufacturer's product data for all material.

1.04 CODES AND STANDARDS

A. The current edition of the following publications of the issues listed below, but referred to thereafter by basic designation only, form a part of this specification to the extent indicated by the references thereto:

1. National Fire Protection Association (NFPA)

    a. NFPA 24 - Installation of Private Fire Service Mains and Their Appurtenances

2. Factory Mutual System (FM)

    a. Factory Mutual Approval Guide

3. Underwriters Laboratories, Inc. (UL)

a. Fire Protection Equipment Directory, with all supplements thereto.

4. AWWA C104 – Cement-Mortar Lining for Ductile Iron Pipe and Fittings for Water.

5. AWWA C1110 - Ductile Iron and Gray Iron Fittings, 3" Through 48" for Water and Other Liquids.

6. AWWA C111 - Rubber Gasket Joints for Ductile-Iron Pressure Pipe and Fittings.

7. AWWA C601 – Disinfecting Water Mains.

8. AWWA C900 – Polyvinyl Chloride (PVC) Pressure Pipe, 4 Inch Through 12 Inch For Water Distribution.

9. AWWA M23 – PVC Pipe – Design and Installation.

10. AWWA C110 – Fitting materials and fittings of the same diameter and pressure rating as those used on the job shall have been tested by the Manufacturer as required by AWWA C110.

1.08 GENERAL REQUIREMENTS

A. Qualifications of the Contractor: The contractor performing the installation work under this specification shall have a current C-36 or C-34 license in the State of California and shall be regularly engaged in the installation of underground fire water system piping.

PART 2 PRODUCTS

2.01 PIPING

A. AWWA PVC pressure pipe (4" through 12") shall conform to AWWA C 900 with Cast-Iron-Pipe-Equivalent ODs.

B. Pressure class of pipe shall be 200 psi with DR=14.

C. Joints

1. Joints between pipe sections shall be the bell-and-spigot-type with flexible elastomeric gaskets conforming to ASTM F 477.

D. Additives and fillers including stabilizers, anti-oxidants, lubricants, and colorants shall not exceed 10 percent by weight per 100 parts of PVC resin in the compound.

2.02 FITTINGS

A. Fittings shall be ductile iron ASTM A-536, Class 350, cement-lined bituminous seal coated in accordance with AWWA C104, UL listed and FM approved for fire protection water service.

B. Pressure rating of fittings shall be the same as adjacent pipe.

2.02 VALVES

A. Valves shall be resilient seated gate, cast iron ASTM A-536, AWWA C509, UL listed and FM approved for fire protection water service.

2.02 THRUST RESTRAINTS

A. All fittings and valves shall be thrust restrained to the PVC C-900 pipe with EBBA Iron Series 2000PV joint restraints. Bell and spigot coupling connections shall be thrust restrained with an EBBA Iron Series 1600 restraint harness at an interval of one harness for every forty (40) linear feet of pipe. Concrete thrust blocks shall be poured at all change in directions.

PART 3 EXECUTION

3.01 EXAMINATION

A. Verify all dimensions by field measurements. Verify that all site fire water distribution piping may be installed in accordance with pertinent codes and regulations, the original design, and the referenced standards.

3.02 PIPING INSTALLATION

A. Refer to the Division 15 Section 15050, "BASIC MECHANICAL MATERIALS AND METHODS", for general piping installation instructions.

B. General Locations and Arrangements: Drawings (plans, schematics, and diagrams) indicate the general location and arrangement of the piping systems. Location and arrangement of piping layout take into consideration pipe sizing and friction loss, expansion, and other design considerations.

C. Trenching Excavation and Backfill shall be in accordance with Division 2 section “TRENCH EXCAVATION AND BACKFILL”.

D. Underground Piping:

1. Supply connections shall be provided as shown on the drawings to service the sprinkler systems or combined sprinkler/standpipe systems. Installation shall conform to the applicable requirements of NFPA 13 and 24, and to the following additional requirements.

2. Connections to supply mains:

a. Connections shall be made either by cutting the supply main, inserting a standard tee and sleeve, and installing the control valve; or by tapping the supply main while under pressure, using an approved tapping sleeve (saddles are not permitted) and valve. When the tapping method is used, the removed discs shall be turned over to the SDR. Submit tapping method to the SDR.

b. Connections requiring water shutdowns shall be performed during nonstandard working hours as directed by the SDR. Interruption of utilities shall conform with the requirements of the "General Material and Work Requirements, Mechanical" Section 15050 of the specification.

c. Impairments to underground yard mains, hydrants, water supplies and any water based extinguishing system shall be coordinated between the Contractors and the SDR in accordance with SNL Fire Protection Impairment Procedures.

3. Pipe:

a. Piping and fittings shall be installed in accordance with applicable portions of AWWA C600 or AWWA M23.

b. The underground pipe connecting sprinkler systems to the water-supply main shall be sloped 3 mm/m (1/8-inch per foot) from the water-supply main to the point of entry into the building. There shall be no high points in the piping where air pockets can form.

c. The minimum depth of cover over the pipe shall be at least 760 mm (30-inches).

d. All changes in direction of pipe shall be made with standard fittings.

e. The supply line shall terminate inside or outside the building with a special flange and spigot piece, as indicated on the drawings. The spigot piece shall be plumb with the flange installed level and set not less than 100 mm (4-inches) above the finished floor or ground level, whichever is applicable. A blank flange shall be temporarily installed on top of the flange and spigot piece to prevent the entrance of foreign matter into the supply line.

3.03 MECHANICAL JOINTS

A. Bolts shall be tightened by means of torque wrenches in such a manner that the follower shall be brought up toward the pipe evenly.

B. If effective sealing is not obtained by tightening the bolts to the specified torques, the joint shall be disassembled and reassembled after through cleaning.

3.04 PUSH-ON JOINTS AND THRUST RESTRAINTS

A. Push-on joints shall be installed per manufacturer's instructions.

B. Thrust restraints shall be installed per manufacturer's instructions.

3.05 ACCEPTANCE

Arrangement with Sandia for final inspections and witnessing of tests shall be made at least 5 working days prior to any tests and flushing.

All tests shall be conducted in the presence of the SDR and SNL Fire Protection Engineering.

B. Hydrostatic Tests - Underground:

1. After the pipe is laid, with all joints completed and the trench partially compacted and backfilled, joints exposed, and the pipe temporarily secured with thrust blocks at all changes in direction, the SDR will inspect. Pipe and pipe sections meeting the SDR's approval shall be hydrostatically tested at not less than 1380 kpa (200 psi) pressure for 2 hours or at 345 kpa (50 psi) in excess of maximum static pressure when the maximum static pressure is in excess of 1035 kpa (150 psi) in accordance with NFPA 13 and 24. There is no allowable pressure drop. The test shall be made against closed hydrants.

2. Where the SDR determines that high points in the underground piping are unavoidable, the Contractor shall install corporation cocks at any high points in the piping so that the air can be expelled completely from the pipe and valves as the line is filled with water. After all the air has been expelled, the corporation cocks shall be closed and capped and the test pressure applied.

3. It shall be the Contractor's responsibility to provide and install any pipe, fittings, and other materials necessary to conduct the pressure test before calling for a test.

4. Exposed pipe, joints, fittings, valves and hydrants shall be carefully examined during the open trench test. Cracked or defective pipe, fittings, valves, or hydrants disclosed during the pressure test shall be replaced by the Contractor with sound material, and the test shall be repeated until the test results are satisfactory.

5. An amount of leakage of 29.6 ml per 25 mm (one fluid ounce per inch) of valve diameter per hour shall be allowed for each metal seated valve isolating the test section. There shall be no leakage at any joints. The Contractor shall locate and repair any defective joints, and the test shall be repeated until the test results are satisfactory to the SDR and SNL Fire Protection Engineering.

6. Each valve shall be fully opened and closed under water pressure to ensure proper operation.

7. Reinspections: Whenever the SDR finds that the piping system will not pass the test or inspection, make the required corrections and arrange for reinspection by the SDR.

8. Reports: Prepare inspection reports, signed by the contractor. Submit reports to Sandia Delegated Representative.

3.06 CLEANING AND DISINFECTING

A. Purge all new water distribution piping systems and parts of existing systems, which have been altered, extended, or repaired prior to use. The cleaning and disinfecting shall be performed by a contractor specializing in sterilization work.

B. Use the purging and disinfecting procedure described in either AWWA C651, or AWWA C652, or as described below:

1. Flush the piping system with clean, potable water until dirty water does not appear at the points of outlet.

2. Fill the system or part thereof, with a water/chlorine solution containing at least 50 parts per million of chlorine. Isolate (valve off) the system, or part thereof, and allow to stand for 24 hours.

3. Drain the system, or part thereof, of the previous solution, and refill with a water/chlorine solution containing at least 200 parts per million of chlorine and isolate and allow to stand for 3 hours.

4. Following the allowed standing time, flush the system with clean potable water until chlorine content is less than 0.2 PPM in the water coming from the system.

5. Submit water samples in sterile bottles to the SDR. Repeat the procedure if the biological examination made by the authority shows evidence of contamination.

C. Reports: Prepare reports for all purging and disinfecting activities. Provide certificate and California Analysis on bacteriological certifying that domestic water system has been properly disinfected.

END OF SECTION

SECTION 02721

STORM SEWERAGE SYSTEMS

PART 1 - GENERAL

1.01 RELATED DOCUMENTS

A. Drawings and general provisions of Contract, including General and Supplementary Conditions and Division-1 Specification sections, apply to work of this section.

1.02 DESCRIPTION

A. This section covers the requirements for the installation of the storm sewerage systems.

1.03 QUALITY ASSURANCE

A. Pipe Tests - Concrete Pipe

1. Pipe materials and pipes of the same diameter and class as those used on the job shall have been tested by the Manufacturer as required by AASHTO M 170, including the acceptability tests specified in Section 5.1.1. therein.

a. Three-edge bearing tests for the load to produce a 0.01-inch crack and the ultimate strength are required.

B. Pipe Tests - Cast Iron Soil Pipe

1. Pipe materials and pipes and fittings of the same diameters and class as those used on the job shall have been tested by the Manufacturer as required by ASTM A 74.

C. Galvanized Sheet Tests - Corrugated Metal Pipe

1. Galvanized steel sheets used in the fabrication of corrugated metal pipe shall have been tested by the sheet manufacturer as required by AASHTO M 218.

D. Gasket Tests - Concrete Pipe

1. Gasket materials and gaskets of the same diameter as those used on the job shall have been tested by the Manufacturer as required by AASHTO M 198, including the performance tests of Section 8.

E. Joint Tests - Cast Iron Soil Pipe

1. Rubber materials and rubber gaskets of the same diameter as those used on the job shall have been tested by the Manufacturer as required by ASTM C 564.

F. Inspection - Concrete Pipe

1. Pipes and gaskets to be used on the job shall be inspected by the Manufacturer prior to shipment.

2. Pipes and gaskets to be used on the job shall be inspected by the Contractor prior to placement.

3. Individual pipes and gaskets shall be rejected and not shipped or not used on the job if the inspections reveal deviations or defects that do not meet the tolerances of the following specifications:

   a. Pipes - AASHTO M 170, Sections 10, 11, and 14

   b. Gaskets - AASHTO M 198, Sections 6 and 11

G. Inspection - Cast Iron Soil Pipe

1. Pipes, fittings, and gaskets to be used on the job shall be inspected by the Manufacturer prior to shipment.

2. Pipes, fittings, and gaskets to be used on the job shall be inspected by the Contractor prior to placement.

3. Individual pipes, fittings, and gaskets shall be rejected and not shipped or not used on the job if the inspections reveal deviations or defects that do not meet the tolerances of the following specifications:

   a. Pipes and fittings - ASTM A 74, Section 12.1

   b. Gaskets - ASTM C 564, Sections 4 and 5

H. Inspection - Corrugated Metal Pipe

1. Pipes and couplings to be used on the job shall be inspected by the Manufacturer prior to shipment.

2. Pipes and couplings to be used on the job shall be inspected by the Contractor prior to placement.

3. Individual pipes and couplings shall be rejected and not shipped or not used on the job if the inspections reveal deviations or defects that do not meet the tolerances of AASHTO M 36.

1.04 SUBMITTALS-CONCRETE PIPE

A. Pipe manufacturer's certification stating the following:

1. Name of manufacturer

2. Sampling, testing, and inspection have been done in accordance with the requirements of AASHTO M 170 and this Specification Section.

3. Materials used in the manufacture of the pipe conform to the requirements of AASHTO M 170.

4. Results of three-edge bearing test (load to produce a 0.01-inch crack and ultimate strength) and absorption tests for all diameters and classes of pipe used.

5. Recommended installation instructions.

B. Gasket manufacturer's certification stating the following (required if gasket is used):

1. Name of manufacturer.

2. Sampling, testing, and inspection have been done in accordance with the requirements of AASHTO M 198 and this Specification Section.

3. Materials used in the manufacture of the gasket conform to the requirements of AASHTO M 198.

4. Results of the tests required by AASHTO M 198.

5. Detailed design of the joint.

6. Recommended installation instructions.

C. Pipe or gasket manufacturer's certification stating that the pipe joints pass the performance tests without leakage (required if gaskets are used).

D. Each certification submitted shall be signed by an authorized agent of the Manufacturer.

1.05 SUBMITTALS - CAST IRON SOIL PIPE

A. Pipe manufacturer's certification stating the following:

1. Name of manufacturer.

2. Sampling, testing, and inspection have been done in accordance with the requirements of ASTM A 74 and this Specification Section.

3. Materials used in the manufacture of the pipe conform to the requirements of ASTM A 74.

4. Recommended installation instructions.

B. Gasket manufacturer's certification stating the following:

1. Name of manufacturer.

2. Sampling, testing, and inspection have been done in accordance with the requirements of ASTM C 564 and this Specification Section.

3. Materials used in manufacture of the gasket conform to the requirements of ASTM C 564.

4. Results of the tests required by ASTM C 564.

5. Detailed design of the joint.

6. Recommended installation instructions.

C. Each certification submitted shall be signed by an agent of the Manufacturer.

1.06 SUBMITTALS - CORRUGATED METAL PIPE

A. Sheet manufacturer's certification stating the following:

1. Name of manufacturer.

2. Analysis as specified in AASHTO M 36, Section 5.

3. Warranty as specified in AASHTO M 36, Section 6.

B. Pipe fabricator's certification stating the following:

1. Name of fabricator.

2. The pipes and couplings conform to the requirements of AASHTO M 36.

3. Recommended installation instructions.

C. Each certification submitted shall be signed by an agent of the Manufacturer.

PART 2 - PRODUCTS

2.01 REINFORCED CONCRETE PIPE

A. Reinforced concrete pipe shall conform to AASHTO M 170.

B. Pipe shall be Class III, Wall B, unless shown otherwise on the Drawings.

C. Pipe shall be either the bell-and-spigot type or the tongue-and-groove type.

D. Gaskets

1. Gasket joints shall be used in all RCP.

2. Pipe joints and gaskets shall conform to AASHTO M 198.

3. Gasket shall be compatible with the pipe end type.

2.02 CAST IRON SOIL PIPE

A. Cast iron soil pipe and fittings shall conform to ASTM A 74, extra heavy class. Hubless pipe shall not be used.

B. Pipe and fittings shall have hubs and plain-end spigots.

C. Joints shall be made with rubber gaskets conforming to ASTM C 564.

D. Gaskets shall be compatible with the pipe ends.

2.03 CORRUGATED GALVANIZED METAL PIPE

A. Galvanized steel sheets used in the fabrication of corrugated metal pipe shall conform to AASHTO M 218.

B. Corrugated galvanized metal pipe and couplings shall conform to AASHTO M 36.

PART 3 - EXECUTION

3.01 PIPE INSTALLATION - GENERAL

A. Gravity sewer pipe-laying shall proceed up-grade with spigot ends pointing in direction of flow.

B. All pipe shall be laid with ends abutting and shall be true to line and grade. They shall be carefully centered so that when laid they will form a sewer with a uniform invert.

END OF SECTION

SECTION 02722

SANITARY SEWERAGE *AND ACID WASTE SYSTEMS*

PART 1 - GENERAL

1.01 RELATED DOCUMENTS

A. Drawings and general provisions of Contract, including General and Supplementary Conditions and Division-1 Specification sections, apply to work of this section.

1.02 DESCRIPTION

B. This section covers the requirements for the installation of the sanitary sewerage and acid waste systems.

1.03 QUALITY ASSURANCE

A. Pipe Tests

1. PVC Sewer Pipe - Pipe materials, pipes and fittings of the same diameter and class as those used on the job shall have been tested by the Manufacturer as required by ASTM D 3034.

B. Joint Tests

1. PVC Sewer Pipe

a. Joints of the same diameter and class as those used on the job shall have been tested by the Manufacturer as required by ASTM D 3212.

b. Elastomeric materials and elastomeric gaskets of the same diameter as those used on the job shall have been tested by the Manufacturer as required by ASTM F 477.

C. Inspection

1. PVC Sewer Pipe

a. Pipes, fittings, and gaskets to be used on the job shall be inspected by the Manufacturer prior to shipment.

b. The Contractor prior to placement shall inspect pipes, fittings, and gaskets to be used on the job.

c. Individual pipes, fittings, and gaskets shall be rejected and not shipped or not used on the job if the inspection reveals deviations or defects which do not meet the tolerances of the following Specifications:

(1) Pipes and Fittings - ASTM D 3034, Section 7.

(2) Elastomeric Gaskets - ASTM F 477, Section 5.

1.04 SUBMITTALS

A. PVC sewer pipe manufacturer's certification stating the following:

1. Name of manufacturer.

2. Sampling, testing, and inspection have been done in accordance with the requirements of ASTM D 3034, ASTM D 3212, and ASTM F 477, and this Specification Section.

3. The materials used in the manufacture of the pipes, fittings, and gaskets conform to the requirements of ASTM D 3034 and ASTM F 477.

4. The pipe joints pass the performance tests without leakage.

5. Test results required by ASTM D 3034 and ASTM F 477 for all diameters of pipe used.

6. Installation instructions.

PART 2 - PRODUCTS

2.01 PVC SEWER PIPE

A. PVC sewer pipe and fittings shall conform to ASTM D 3034, SDR 35.

B. PVC sewer pipe shall have elastomeric gasket joints.

C. Joints shall conform to ASTM D 3212, Push-on Type.

D. Elastomeric gaskets shall conform to ASTM F 477.

E. Additives and fillers including stabilizers, anti-oxidants, lubricants, and colorants shall not exceed 10 percent by weight per 100 parts of PVC resin in the compound.

2.02 MANHOLES

A. Manholes shall be in accordance with applicable portions of Section “Manholes and Cleanouts”

2.03 POLYPROPYLENE PIPE

A. Piping to be used for exterior acid waste from the laboratory buildings shall be polypropylene and shall conform to Section 15493 “Laboratory Drainage Systems”.

PART 3 - EXECUTION

3.01 PIPE INSTALLATION - GENERAL

A. Inspect each pipe and fitting before and after installation; replace that found defective and remove from site. Provide proper facilities for lowering sections of pipe into trenches. Lay non-pressure pipe with the bell ends in the upgrade direction. Adjust spigots in bells to give a uniform space all around. Blocking or wedging between bells and spigots will not be permitted. Replace by one of the proper dimensions, pipe or fittings that do not allow sufficient space for installation of joint material. At the end of each workday, close open ends of pipe temporarily with wood blocks or bulkheads. Provide batterboards not more than 25 feet apart in trenches for checking and ensuring that pipe invert elevations are as indicated. Laser beam method may be used in lieu of batterboards for the same purpose.

3.02 LEAKAGE TESTS

A. Conduct leakage tests in accordance with Section: Leakage Test

3.03 MANHOLE INSTALLATION

B. Manholes shall be installed in accordance with applicable portions of Section: Manholes and Cleanouts.

END OF SECTION

SECTION 02723

FLOW MONITORING STATION

PART 1 - GENERAL

1.01 RELATED DOCUMENTS

A. Drawings and general provisions of Contract, including General and Supplementary Conditions and Division-1 Specification Sections, apply to work of this section.

1.02 DESCRIPTION

A. Construct a new flow monitoring station as indicated on drawings and by requirements of this Section.

B. Work shall include, but is not limited to:

1. Excavation and Backfill.

2. Concrete formwork.

3. Concrete reinforcement.

4. Cast-in-place concrete.

5. Metal and steel erection and fabrication.

6. Metal roof decking and metal roofing.

7. Furnish and install all equipment as indicated on the drawings and described in this section.

1.03 QUALITY ASSURANCE

A. Excavation and backfill work shall conform to Specification Section 02200: Trench Excavation and Backfill.

B. Concrete reinforcing shall conform to Specification Section 03200: Concrete Reinforcement.

C. Concrete work below grade shall conform to Specification Section 03300: Cast In Place Concrete.

D. Concrete work above grade shall conform to Specification Section 03353: Architectural Concrete.

E. Structural steel shall conform to Specification Section 05100: Structural Metal Framing.

F. Metal Roof Decking shall conform to Specification Section 05300: Metal Decking.

G. Ladders shall conform to Specification Section 05500: Metal Fabrications.

H. Floor grating shall conform to Specification Section 05520: Floor Plate and Grating.

I. Metal roofing shall conform to Specification Section 07610: Metal Roofing.

J. Equipment:

1. Manufacturers Qualifications: Firms regularly engaged in the manufacture of equipment of types, materials, and sizes required, where products have been in satisfactory use in similar service for no less that 5 years.

1.04 SUBMITTALS

A. Manufacturer's Data:

1. Product Data: Submit manufacturer's technical product data and specifications for all flow monitoring equipment and products listed:

a. Manufacturer's technical data, specifications, and installation instructions for pre-manufactured Parshall Flume.

b. Manufacturer's technical data, specifications, installations instructions, calibration and start-up instructions for:

(1) Ultrasonic Flow Meter.

(2) pH Meter.

(3) Refrigerated Sampler.

c. Manufacturer's specifications, installation instructions, and performance curves for the fan.

B. Shop Drawings:

1. Submit shop drawings for fabrication, bending, and placement of concrete reinforcement.

2. Submit shop drawings showing details of fabrication, assembly, and installation of all steel, including templates for anchor bolt placement.

C. Laboratory Test Reports: Submit laboratory certificates for concrete materials and mix designs.

D. Samples of materials and finished products as may be requested by Sandia Delegated Representative.

E. Record Drawings: At project closeout, submit record drawings of constructed Flow Monitoring Station with all equipment in accordance with requirements of Division 1.

PART 2 - PRODUCTS

2.01 CONCRETE MATERIALS

A. Cast-in-place Concrete: Refer to Specification Section 03300: Cast-in-Place Concrete.

B. Architecural Concrete: Refer to Specification Section 03353: Architectural Concrete.

C. Reinforcing Materials: Refer to Specification Section 03200: Concrete Reinforcement.

2.02 STEEL MATERIALS

A. All Structural Steel Materials shall conform to Section 05100: Structural Metal Framing.

B. Galvanizing: All metals not embedded in concrete shall be galvanized.

1. Hot-dip galvanized assemblies in as large sections as possible.

2.03 FLOW MONITORING EQUIPMENT AND PRODUCTS

A. Parshall Flume: Construct a Parshall Flume of the dimensions indicated on plans. All dimensions for flume construction shall be within tolerances of 1/32 inch except for throat dimensions which shall be within 1/64 inch.

1. At the Contractors option, a pre-manufactured Parshall flume may be used in lieu of a constructed flume. The Contractor shall submit all technical data for the flume for approval prior to purchasing.

B. Ultrasonic Flow Meter: Furnish and install an Ultrasonic Flow meter that provides accurate, air temperature compensated, level measurement.

1. Analyzer: Microprocessor-based electronics and data stored in an internal PROM providing precise level to flow rate conversion, and containing a built-in 12v DC lead acid battery in the event of power interruption.

a. Manufacturer: ISCO Model 2440 Flow meter or approved equal.

2. Sensor: Provide with accuracy of 1% of full scale in stable constant air over compensated temperature range. Sensor shall be contained in a sealed, corrosion-resistant, acetal plastic housing that requires no scheduled maintenance.

a. Manufacturer: Supplied with ISCO Model 2440 Flow Meter or approved equal.

3. Circular Chart Recorder: Provide accurate recording of level or flow rate information (within 1% of span) using reliable, solid-state electronics to assure dependable operation with a seven day recording format. An internal clutch assembly shall be provided to allow the chart paper to be easily aligned with the time reference mark on the unit, and permit simple resetting in the event of power interruption.

a. Manufacturer: ISCO Model 2410 circular chart recorder or approved equal.

C. pH Meter: Furnish and install a pH meter with self-cleaning-probe and circular chart recorder.

1. pH Transmitter/Analyzer: Provide NEMA 4X corrosion proof and weather proof ABS enclosure with pushbutton calibration and proportional direct isolated 4-20 milliamp output, 2 form C relay outputs for high and low alarms, digital display, and standard pH range of 0-14.

a. Manufacturer: Lakewood Instruments Model No. 820-35-SM or approved equal.

2. pH Probe: Provide accurate sensing of pH with an annular junction that protects against streaming errors by providing a silver-free salt bridge between process stream and reference junction. Provide drift-free, noise free transmission of pH signal. Probe shall be of self-cleaing type with sample and hold during water wash. Mounting bracket shall be supplied with probe.

a. Manufacturer: Lakewood Instruments Model No. 520-01-055-CP-B with water wash cleaning assembly and sample and hold wash or approved equal.

3. Water Wash Timer and Solenoid: Provide timer and solenoid unit to supply water wash at preset timed intervals to pH probe.

a. Manufacturer: Lakewood Instruments Model No. 63-99-Surface Mount, 110 volts, NEMA 4X, 3/8" O.D. water line or approved equal.

4. Circular Chart Recorder: Lakewood Instruments compatible model or approved equal.

D. Refrigerated Sampler: Furnish and install a refrigerated wastewater sampler with a stainless steel exterior and a totally sealed controller. Sampler shall also have a corrosion resistant pump and continuous memory in the controller.

1. Manufacturer: ISCO Model No. 2700R with 24 bottle sampling capacity.

PART 3 - EXECUTION

3.01 FORMING AND PLACING CONCRETE

A. Ready-Mix Concrete: ASTM C 94.

B. Formwork: Construct so that concrete members and structures are of correct size, shape, alignment, elevation and position.

C. Reinforcement: Position, support and secure reinforcement against displacement. Locate and support with metal chairs, runners, bolsters, spacers and hangers, as required. Set wire ties so ends are directed into concrete, not toward exposed concrete surfaces.

D. Joints: Provide construction joints as indicated or required. Locate construction joints so as not to impair strength and appearance of structure.

E. Installation of Embedded Items: Set and build into work anchorage devices and other embedded items required for other work that is attached to, or supported by cast-in-place concrete. Use setting diagrams, templates and instructions provided by others for locating and setting.

F. Concrete Placement: Comply with ACI, placing concrete in a continuous operation within planned joints or sections. Do not begin placement until work of other trades affecting concrete is completed.

3.02 CONCRETE FINISHES

A. Exposed-to-View Surfaces: Form liner shall be used on exterior surfaces as shown on the drawings.

B. Slab Trowel Finish: Apply trowel finish to monolithic slab surfaces except as indicated below. Consolidate concrete surfaces by finish troweling, free of trowel marks, uniform in texture and appearance.

C. Non-Slip Broom Finish: Apply non-slip broom finish to exterior concrete stoop and the floor area not in the concrete flume. Immediately after trowel finishing, slightly roughen concrete surface by brooming with fiber bristle broom.

D. Curing: Curing shall be in accordance with Specification Section 03300: Cast-in-Place Concrete.

3.03 STEEL FABRICATION AND ERECTION

A. Erection: Steel erection shall comply with Specification Section 05100: Structural Metal Framing.

3.04 MISCELLANEOUS METALS

A. Preparation: Take field measurements prior to preparation of shop drawings and fabrication, when possible. Allow for trimming and fitting when taking field measurements. Coordinate and furnish anchorages, setting drawings, diagrams, templates, instructions, and directions for installation of anchorages, which are to be embedded in concrete constructions.

B. Installation: Perform cutting, drilling, and fitting required for installation; set work accurately in location, alignment, and elevation, measured from established lines and levels. Provide anchorage devices and fasteners where necessary for installation of other work.

1. Set loose items on cleaned bearing surfaces, using wedges or other adjustments as required. Solidly pack open spaces with bedding mortar, consisting of 1 part portland cement to 3 parts sand, and only enough water for packing and hydration, or use commercial nonshrink grout material.

2. Use Galvanizing repair paint on damaged galvanized surfaces.

3.05 EQUIPMENT INSTALLATION

A All Equipment shall be installed according to the Manufacturers recommended procedures and instructions as submitted.

END OF SECTION

SECTION 02735

LIQUID EFFLUENT SYSTEM VAULT

PART 1 - GENERAL

1.01 RELATED DOCUMENTS

A. Drawings and general provisions of Contract, including General and Supplementary Conditions and Division-1 Specification Sections, apply to work of this section.

1.02 DESCRIPTION

A Construct a new liquid effluent system concrete vault as indicated on drawings and by requirements of this Section.

B. Furnish, install and erect all metals associated with the vault as indicated on the drawings.

C. Work includes, but is not limited to:

1. Concrete formwork.

2. Concrete reinforcement.

3. Cast-in-place concrete.

4. Metal and steel erection and fabrication.

D. Refer to Specification Section 02200 for excavation and backfill work required for sanitary sewage systems.

E. Refer to Specification Section 03310 "Cast In Place Concrete" for concrete work required for sanitary sewage systems.

1.03 CODES AND STANDARDS

A. Reinforced Concrete: ACI 301 "Specifications for Structural Concrete Buildings"; ACI 318 "Building Code Requirements for Reinforced Concrete"; comply with applicable provisions except as otherwise indicated.

1. Sandia Delegated Representative will employ separate testing laboratory to evaluate concrete delivered to and placed at site.

B. Steel: AISC "Code of Standard Practice for Steel Buildings and Bridges"; AISC "Specifications for the Design, Fabrication, and Erection of Structural Steel for Buildings" including "Commentary"; AWS "Structural Welding Code"; comply with applicable provisions except as otherwise indicated.

1.04 STRUCTURAL PERFORMANCES

A. Provide galvanized assemblies which, when installed, comply with the following minimum requirements for structural performance, unless otherwise indicated.

1. Treads and Platforms of Steel Stairs: Capable of withstanding a uniform load of 100 lbs. per sd. ft. or a concentrated load of 300 lbs. so located as to produce maximum stress conditions.

2. Handrails and Toprails: Concentrated loads of 200 lbs. applied at any point in any direction, and a uniform load of 50 lbs. per lin. ft. applied simultaneously in both vertical and horizontal directions.

3. Guards: Intermediate rails and balusters; uniform load of 25 lbs. per sq. ft. of gross area of guard, including any open areas, of which they are a part.

1.05 QUALITY CONTROL

A. Testing laboratory will perform sampling and testing during concrete placement, which may include the following, as directed by Sandia Delegated Representative. This testing does not relieve Contractor of responsibility of providing concrete in compliance with specifications. Contractor shall perform additional testing as necessary, at no expense to Sandia, to ensure quality of concrete.

1. Sampling: ASTM C 172.

2. Slump: ASTM C 143, one test for each load at point of discharge.

3. Compressive Strength: ASTM C 39, one set for each 50 cu. yds. or fraction thereof of each class of concrete; one specimen tested at 7 days, one specimen tested at 28 days, and one retained for later testing if required.

4. Test results will be reported in writing to Architect/Engineer, Contractor and concrete producer within 24 hours after tests are made.

1.06 SUBMITTALS

A. All submittals shall comply with the requirements of Specification Section 01300 of Division 1 - General Requirements.

1. Manufacturer's Data: Submit manufacturer's product data with installation instructions for proprietary materials including reinforcement and forming accessories, admixtures, joint materials, hardeners, curing materials and others as requested by Sandia Delegated Representative.

2. Shop Drawings: Submit shop drawings for fabrication, bending, and placement of concrete reinforcement. Comply with ACI 315 "Manual of Standard Practice for Detailing Reinforced Concrete Structures."

3. Laboratory Test Reports: Submit laboratory certificates for concrete materials and mix designs.

4. Shop drawings showing details of fabrication, assembly, and installation of all steel, including templates for anchor bolt placement.

5. Samples of materials and finished products as may be requested by Sandia Delegated Representative.

B. Records Drawings: At project closeout, submit record drawings of installed Liquid Effluent Vault in accordance with requirements of Division 1.

PART 2 - PRODUCTS

2.01 CONCRETE MATERIALS

A. Portland Cement Concrete shall conform to Specification Section 03330: Cast-In-Place Concrete.

B. Reinforcing Materials shall conform to Specification Section 03200: Concrete Reinforcement.

1. Deformed Reinforcing Bars: ASTM A 615, Grade 60 unless otherwise indicated.

2.02 STEEL MATERIALS

A. General: For work exposed to view, use materials selected for their smoothness and freedom from surface blemishes. All assemblies and fasteners are to be hot-dip galvanized after fabrication.

B. Steel Plates, Shapes, and Bars: ASTM A36.

C. Steel Bar Grating: ASTM A569 or ASTM A36.

D. Steel Tubing: ASTM A500 or ASTM A501.

E. Structural Steel Sheet: ASTM A570 or ASTM A611, Class 1; of grade required for design loading.

F. Galvanized Structural Steel Sheet: ASTM A 446, of grade required for design loading. Coating designation G90 or as indicated.

G. Steel Pipe: ASTM A53, type and grade for design loading (if applicable), galvanized standard weight (Schedule 40) unless otherwise indicated.

H. Concrete Inserts: Threaded or wedge type; either galvanized ferrous castings, malleable iron, or cast steel; with steel bolts, washers and shims; hot-dip galvanized.

I. Non-Shrink Non-Metallic Grout: CE CRD-C621, nonstaining, noncorrosive, nongaseous; recommended by manufacturer for types of applications indicated.

J. Fasteners:

1. Provide bolts, nuts, machine screws, concrete anchorage devices, lock washers as required for application indicated and complying with applicable Federal standards. Hot-dip galvanize fasteners to comply with ASTM A153.

2. Unfinished bolts and nuts, ASTM A307, Grade A.

3. High strength bolts and nuts, ASTM A325F.

K. Galvanizing:

1. All metals not embedded in concrete shall be galvanized. ASTM A386 for assembled products; ASTM A123 for rolled, pressed, and forged steel shapes, plates, bars, and strip 1/8" and thicker; galvanizing repair paint: MIL-P-21035 or SSPC-Paint-20.

2. Hot-dip galvanized assemblies in as large sections as possible.

L. Connections: As shown on final shop drawings:

1. Use machine bolt, ASTM A307, except as otherwise indicated.

2. Comply with AWS Code for procedures, appearance, and quality of welds.

M. Fabrication:

1. General: Use materials of size and thickness shown or, if not shown, of required size, grade, and thickness to produce strength and durability in finished product.

a. Weld corners and seams continuously; grind exposed welds smooth and flush.

b. Form exposed connections with hairline, flush joints; use concealed fasteners where possible.

2. Comply with AISC "Specification" and final shop drawings. Mark and match-mark units for field assembly. Fabricate structural steel members to provide holes for securing other work and for passage of other work through steel framing as indicated.

N. Space Saving Stair:

1. Stair shall be a 56° steel, galvanized stair with dimensions as indicated on the drawings.

2. Stair shall be as manufactured by The Lapeyre Stair, or approved equal.

3. Provide stair complete with handrails, handrail braces, non-skid surface, and all connections and anchorage requirements.

O. Metal Bar Gratings: Comply with NAAMM "Metal Bar Grating Manual" and "Standard Specifications for Metal Bar Grating and Metal Bar Grating Threads" for material, type, traffic surface, and finish indicated below:

1. Material: Steel.

2. Type: Welded.

a. Cross Bars: Rectangular.

3. Traffic Surface: Plain.

4. Steel Finish: Hot-dip galvanized, 1.5 oz. per sq. ft.

P. Steel Pipe Railings: Fabricate to dimensions shown, with smooth bends and welded joints using 1-1/2 steel pipe, unless otherwise indicated. Secure posts and rail ends to building construction as indicated.

1. Galvanize steel railings, including pipe, fittings, brackets, fasteners, and other ferrous metal components.

PART 3 - EXECUTION

3.01 FORMING AND PLACING CONCRETE

A. Ready-Mix Concrete: ASTM C 94.

B. Formwork: Construct so that concrete members and structures are of correct size, shape, alignment, elevation and position.

1. Provide openings in formwork to accommodate work of other trades. Accurately place and securely support items built into forms.

2. Clean and adjust forms prior to concrete placement. Apply form release agents or wet forms, as required. Retighten forms during concrete placement if required to eliminate mortar leaks.

C. Reinforcement: Position, support and secure reinforcement against displacement. Locate and support with metal chairs, runners, bolsters, spacers and hangers, as required. Set wire ties so ends are directed into concrete, not toward exposed concrete surfaces.

D. Joints: Provide construction joints as indicated or required. Locate construction joints so as not to impair strength and appearance of structure.

E. Installation of Embedded Items: Set and build into work anchorage devices and other embedded items required for other work that is attached to, or supported by cast-in-place concrete. Use setting diagrams, templates and instructions provided by others for locating and setting.

F. Concrete Placement: Comply with ACI, placing concrete in a continuous operation within planned joints or sections. Do not begin placement until work of other trades affecting concrete is completed.

G. Consolidate placed concrete using mechanical vibrating equipment with hand rodding and tamping, so that concrete is worked around reinforcement and other embedded items and into forms.

H. Protect concrete from physical damage or reduced strength due to weather extremes during mixing, placement and curing.

1. In cold weather comply with ACI 306.

2. In hot weather comply with ACI 305.

3.02 CONCRETE FINISHES

A. Exposed-to-View Surfaces: Provide a smooth finish for exposed concrete surfaces. Remove fins and projections, patch defective areas with cement grout, and rub smooth.

B. Slab Trowel Finish: Apply trowel finish to monolithic slab surfaces except as indicated below. Consolidate concrete surfaces by finishing troweling, free of trowel marks, uniform in texture and appearance.

C. Non-Slip Broom Finish: Apply non-slip broom finish to exterior concrete stoop, vault floor, and vault top adjacent to stair. Immediately after trowel finishing, slightly roughen concrete surface by brooming with fiber bristle broom.

D. Curing: Begin initial curing as soon as free water has disappeared from exposed surfaces. Where possible, keep continuously moist for not less than 72 hours. Continue curing by use of moisture-retaining cover or membrane-forming curing compound. Cure formed surfaces by moist curing until forms are removed. Provide protections as required to prevent damage to exposed concrete surfaces.

3.03 STRUCTURAL STEEL

A. Erection: Comply with AISC Code and Specifications, and maintain work in safe and stable condition during erection. Provide temporary bracing and shoring as required; remove when final connections placed.

1. Set base plates on cleaned bearing surfaces, using wedges or other adjustments as required. Solidly pack open spaces with nonshrink grout material.

2. Splice members only where shown on final shop drawings.

3. Touch up galvanizing after erection. Clean field welds, bolted connections, and abraded areas, and apply galvanizing repair process.

3.04 MISCELLANEOUS METALS

A. Preparation: Take field measurements prior to preparation of shop drawings and fabrication, when possible. Allow for trimming and fitting when taking field measurements. Coordinate and furnish anchorages, setting drawings, diagrams, templates, instructions, and directions for installation of anchorages, which are to be embedded in concrete constructions.

B. Installation: Perform cutting, drilling, and fitting required for installation; set work accurately in location, alignment, and elevation, measured from established lines and levels. Provide anchorage devices and fasteners where necessary for installation of other work.

1. Set loose items on cleaned bearing surfaces, using wedges or other adjustments as required. Solidly pack open spaces with bedding mortar,

consisting of 1 part portland cement to 3 parts sand, and only enough water for packing and hydration, or use commercial nonshrink grout material.

2. Use Galvanizing repair paint on damaged galvanized surfaces.

END OF SECTION

SECTION 02870

CAST IRON TREE GRATES

PART 1 - GENERAL

1.01 RELATED DOCUMENTS

A. Drawings and general provisions of Contract, including General and Supplementary Conditions and Divisions-1 Specification Sections, apply to work of this section.

1.02 SCOPE OF WORK

A. Work shall include (but not be limited to) all labor, materials, equipment, and services required for the installation of cast iron tree grates in accordance with these specifications and applicable drawings.

1.03 QUALITY ASSURANCE

A. Provide tree grates and frames as a complete unit manufactured by a single firm.

B. References to ASTM or Federal Standards are the latest edition of those standards.

C. Provide grates manufactured true to pattern, with component parts fitting together in a satisfactory manner.

D. Provide castings of uniform quality, free of blowholes, porosity, hard spots or other defects.

1.04 SUBMITTALS

A. Submit manufacturer's product literature and data fully describing the material to be furnished including: shop drawings and detailed printed instructions describing installation, handling, storage and clean up procedures.

1.05 JOB CONDITIONS

A. Do not begin installation until work which could cause damage to tree grates is completed. Complete all subsurface construction and planting operations prior to installation of grates.

1.06 DELIVERY, STORAGE AND HANDLING

A. Store tree grates in accordance with manufacturer's recommendations and in areas designated by the contractor.

PART 2 - PRODUCTS

2.01 TREE GRATES

A. Manufacturer: Urban Accessories, First Street and Avenue "A", Snohomish, WA 98290, (206) 568-3143; or approved equal.

B. Furnish grates of grey iron castings conforming to ASTM A-48-76 Class 30, or better.

C. Dimensions: 48 inches x 48 inches square, Standard Flat. Cast in two sections. Thickness of 3/4" at outer edge.

D. Finish: Cast iron grey.

E. Tensile Strength: 30,000 P.S.I.

F. Angle Frame: One inch x one inch steel angle (1/4 inch thick) with a 3 inch x 1/4" steel plate frame support with an attached rebar leg for concrete imbedment. Finish same as tree grate.

G. Tree Opening: 9 inches diameter minimum with expandable "break-out" centers.

PART 3 - EXECUTION

3.01 INSTALLATION

A. Follow manufacturer's instructions and install generally as follows:

B. Check to see that angle frame is firmly cast into surrounding concrete and provides a level seat for the grate in a true, flat plane.

C. Prior to setting grate tree must be in place.

D. Set one-half of grate in place. Check tree trunk and tree grate opening for proper clearance. Center tree ball as necessary.

E. Set other half of grate in place, bolting halves together on underside where bolt slots are provided.

F. Grate should be flush with frame and surrounding surface.

END OF SECTION

SECTION 02875

LITTER RECEPTACLES

PART 1 - GENERAL

1.01 RELATED DOCUMENTS

A. Drawings and general provisions of Contract, including General and Supplementary Conditions and Division-1 Specification Sections, apply to work of this section.

1.02 SCOPE OF WORK

A. Work shall include all labor, materials, equipment, and services required for complete installation of litter receptacles.

1.03 QUALITY ASSURANCE

A. Notify Sandia Delegated Representative of litter receptacle arrival on site. Inspect and reject materials judged unacceptable.

B. Provide receptacles as a complete unit manufactured by a single firm.

PART 2 - PRODUCTS

2.01 LITTER RECEPTACLES

A. Manufacturer: Landscape Forms, 431 Lawndale Avenue, Kalamazoo, MI 49001-9543, (800)521-2546; or approved equal.

B. Landscape Forms: Model 52LXG2040.

C. Metal: Steel components are ASTM A36 mild hot rolled structural steel. Tubular components 11-gauge (1/8-inch) minimum DOM. Zinc-plated and finished with Pangard polyester powder resin electrostatically applied and fused to components.

D. Fiberglass: Molded of multiple layers of chopped glass fibers impregnated with high quality isopthalic thermosetting resin. Gel coat colors are uniformly applied during fabrication.

E. Metal Color: Grotto (flat black).

F. Fiberglass Color: Middle Earth.

G. Lid: Permanently attached to base for litter removal.

PART 3 - EXECUTION

3.01 INSTALLATION

A. Place receptacles in final locations as shown on drawings. Take necessary precautions to protect receptacles from damage.

END OF SECTION

SECTION 02890

PEDESTRIAN BRIDGE

PART 1 - GENERAL

1.01 RELATED DOCUMENTS

A. Drawings and general provisions of Contract, including General and Supplementary Conditions and Division-1 Specification Sections, apply to work of this section.

1.02 PRODUCT STORAGE AND HANDLING

A. Storage and Handling: All GLULAM members shall be unloaded and handled by fork lift, or crane, using nylon slings. Wire rope cables shall not be used to lift GLULAM beams. Use wood stickers to separate materials during storage to prevent warping or twisting. Any damage to materials must be reported to the Sandia Delegated Representative and replaced.

1.03 SUBMITTALS

A. The contractor shall furnish a complete set of shop drawings to loads shown on drawings for approval prior to fabrication. All structural GLULAM members, sawn timber, steel hardware, and accessories, shall be furnished as detailed in the plans and specifications. Shop drawings shall be stamped and sealed by a California registered structural engineer.

PART 2 - PRODUCTS

2.01 MATERIALS

A. Acceptable Manufacturers: Western Wood Structures, Inc., P.O. Box 130, Tualatin, Oregon 97062 (503/692-6900). No substitutions will be allowed.

B. Timber and Plywood: Furnish Douglas fir sawn timber and plywood, per grade and surfacing shown on the shop drawings. Timber specifications per WCLIB rules No. 16 and plywood per APA standards. Furnish grade certificates as required. Pre-fabricate timber and plywood prior to treatment.

C. Glued Laminated Timbers: GLULAMS shall be Douglas fir 24f for stringers and girders and Comb. 2 for deck panels. All GLULAMS shall be 100% waterproof phenolic resin glues, and fabricated prior to treatment. Furnish AITC Certificate of Compliance.

D. Pressure Treatment: All GLULAM members, sawn timber, plywood, etc. shall be pressure treated per AWPA specifications C28-78. Incise all materials prior to treatments except for handrails and handrail posts. Pressure treatment for members not in ground contact shall be 0.3 PCF Type C light solvent pentachlorophenol, GLULAM members shall be treated with 0.3 PCF Type A heavy solvent pentachlorophenol. Do not pressure treat GLULAM members with water borne salts. Sawn timber and plywood shall be pressure treated per AWPA specifications C-2 and C-9.

E. Hardware and Steel: All hardware and fabricated steel shall be supplied per the plans and specifications. Fabricated steel to meet ASTM A36 and hardware to meet ASTM A-307. All welding by certified welders. Hardware and steel to be furnished with baked-on, epoxy powder enamel finish (dark bronze).

F. Pipe Supports: Pipe supports shall be supplied to support the ***{10 inch water line, conduit, sewer line, etc.- insert as needed};*** refer to drawings for locations.

PART 3 - EXECUTION

3.01 ABUTMENTS AND PIERS

A. Provide concrete abutments and drilled piers as indicated on drawings; refer to Sections 02350, Drilled Piers, and 03300, Cast-In-Place Concrete.

3.02 BRIDGE INSTALLATION

A. Fully construct and install the bridge in accordance with manufacturer's instructions.

END OF SECTION

SECTION 03100

CONCRETE FORMWORK

PART 1 - GENERAL

1.01 RELATED DOCUMENTS

Drawings and general provisions of Contract, including General and Supplementary Conditions and Division-1 Specification Sections, apply to work of this section as if repeated herein.

1.02 DESCRIPTION

A. Work under this section consists of furnishing everything necessary for and incidental to the execution and completion of concrete formwork, as indicated on the drawings and specified herein.

B. The extent of formwork is indicated by the concrete structures shown on the drawings.

C. The work includes providing formwork for concrete as listed below and installation into formwork of items furnished by others, such as anchor bolts, setting plates, bearing plates, anchorages, inserts, frames, nosings, and other items to be embedded in concrete (but not including reinforcing steel).

1. Cast-in-Place Concrete

2. Architectural Concrete Cast-in-Place

3. Architectural Precast-Prestressed Concrete.

1.03 QUALITY ASSURANCE

A. Codes and Standards: Unless otherwise shown or specified, design, construct, erect, maintain, and remove forms and related structures for concrete work in compliance with the American Concrete Institute:

1. Standard ACI 347, "Recommended Practice for Concrete Formwork"

2. ACI SP 4, "Formwork for Concrete".

B. Allowable Tolerances:

1. Formwork shall provide completed concrete surfaces complying with the tolerances specified in ACI 347.

2. Before concrete placement check the lines and levels of erected formwork. Make corrections and adjustments to ensure proper size and location of concrete members and stability of forming systems.

3. During concrete placement check formwork and related supports to ensure that forms are not displaced and that complete work will be within specified tolerances.

1.04 SUBMITTALS

A. Manufacturer's Data - Concrete Formwork: Submit copies of manufacturer's data and installation instructions for proprietary materials including form coatings and manufactured form systems.

B. In accordance with Specification Section 01300 submit shop drawings for fabrication and erection of specified finished concrete surfaces as shown or specified. Show the general construction of forms including jointing, special formed joints or reveals, location and pattern of form tie placement, and other items which affect the exposed concrete visually. Include details of inserts and anchorages. Indicate sequence of removal of forms.

C. Corrections or comments made on formwork shop drawings during the Sandia Delegated Representative's review do not relieve the Contractor or the Contractor's Engineer from compliance with requirements of the drawings, specifications, and codes. The review is only for general architectural applications and features, general conformance with the design concept of the project, and general compliance with the information given in the contract documents.

D. Revisions shown on the shop drawings shall be considered as changes necessary to meet specified requirements and shall not be taken as the basis of claims for extra work.

PART 2 - PRODUCTS

2.01 FORM MATERIALS

A. Furnish material for formwork capable of producing finished surfaces as specified in Section 03300, Section 3353, and Section 03450. The form facing material may be plywood, tempered concrete-form-grade hardboard, metal, plastic, paper, or other material capable of producing the desired finish except as otherwise specified herein.

B. Cylindrical Columns and Supports:

1. Form round section members with paper or fiber tubes constructed of laminated plies using water-resistant type adhesive with wax impregnated exterior for weather and moisture protection.

    a. Provide units with sufficient wall thickness to resist loads imposed by wet concrete without deformation.

    b. Provide units having "seamless" interior to minimize spiral gaps or seams.

    c. Provide manufacturer's standard plastic-lined-interior units.

C. For textured finish, form concrete surfaces with units of face design, size, arrangement, and configuration as shown on the drawings or as required to meet requirements of other sections. Provide solid backing and form supports to ensure stability of textured form liners.

D. Form Coatings: Provide commercial formulation form coating compounds that will not bond with, stain, nor adversely affect concrete surfaces, and will not impair subsequent treatment of concrete surfaces requiring bond or adhesion, nor impede the wetting of surfaces to be cured with water or curing compounds. Release agent shall be used in strict accordance with manufacturer's recommendations.

E. Vinyl Foam Tape: 3/4" x 1/8" adhesive backed closed cell tape.

F. Form accessories to be partially or wholly embedded in the concrete, such as ties, anchors, hangers, and inserts, shall be of a commercially manufactured type. They shall be of sufficient strength to completely resist displacement of forms due to construction loads and the depositing of concrete. Non fabricated wire shall not be used. Where the concrete surface is to be exposed, provide form accessories which will not have exposed metal at the surface.

    1. Form ties shall be adjustable-length, removable or snap-off metal form ties, designed to prevent spalling of concrete surfaces, upon removal. Unless otherwise shown, provide ties so that the portion remaining within concrete after removal of exterior parts is at least 1" from the outer concrete surface. Unless otherwise indicated, provide form ties which will leave a depression not larger than one inch in diameter. The bearing area of external holding devices shall be adequate to prevent crushing of form lumber. Use water seal ties in concrete exposed to hydrostatic pressure. Form ties fabricated on the project site and wire ties are not acceptable.

G. Screed Chairs: Metal, wood not permitted.

H. Corner chamfer shall be mill run white pine solid material or preformed PVC at exposed corners of columns, walls, and beams except as otherwise specified.

I. Forms for Architectural Concrete Cast-in-Place:

1. Forms for architectural concrete shall be built of such materials and in such a manner that they are completely rigid and strong enough to stand without deflection, movement, or leakage, the high hydraulic pressures which result from rapid filling and heavy high frequency vibration. Deflection in formwork shall be limited to 1/360 of each component span.

2. The Contractor shall have the option of constructing the formwork with one or more of the following materials, which have been listed in order of highest expected reuse factor. It is recommended that the Contractor design forms for as high a reuse factor as possible.

   a. Steel - Fabricated by an experienced manufacturer of formwork as approved by the Sandia Delegated Representative. Forms shall be fabricated of 3/16" maximum thick steel with ribbing spaced a maximum of 12" center to center, and with minimum welds and camber deflection. Butt joints shall be welded full and ground flush with the skin plate. Only blue steel plate shall be used and plate must be free of rust and scale before concrete placement.

   b. Fiberglass - Reinforced plastic fabricated by an experienced manufacturer as approved by the Sandia Delegated Representative. Forms shall be manufactured with a polyester resin and shall contain not less than 25% fiberglass. Forms shall be moisture resistant. Material shall be an approved equal to Duralan, as manufactured by Lunn Laminates, Long Island, New York.

   c. High Density Concrete Form Overlay, Class I or II - Panels shall be APA grade-trademarked and meet requirements of the latest edition of U.S. Product Standard PS 1. Overlay shall not stain the surface of the architectural concrete.

3. Rustications and configuration strips shall be a non-absorbent material designed to be compatible with the form selected surface, and may be one of the following: polyvinyl chloride, fiberglass, steel, or smooth sealed milled hardwood.

   a. Rustications and configuration strips shall be attached to the forms at no less than 8" on-center to prevent displacement under concrete operations. The attachment technique, whether it be nails or screws, shall be combined with caulking or other sealing operation, to ensure that mortar does not seep behind the rustication or configuration strips. Rustication strips shall be applied and attached to the form surface in a manner proven on the mock-up to prevent seepage of mortar or paste. These strips shall be set in a caulking bed, or shall be set on foam tape, or shall be a fully glued joint.

These techniques are also designed to prevent deterioration and destruction of these strips. Excess caulking material shall be fully removed when the strip is planted and nail or screw holes shall be caulked smooth and coated with the form sealer.

b. Form sealer shall be applied to wood surfaces in contact with the finish face of architectural concrete and to saw cut edges and drill holes. Apply a minimum of two full coats.

4. The form ties shall be located in a uniform pattern and approved by the Sandia Delegated Representative, with one row of ties located 12" above and below rusticated construction joints. The tie system shall be utilized to exert pressure against rustication strip gaskets as the primary form sealing system.

   a. The Contractor shall have the option of designing the forms with a tie system proven compatible with the requirement of leakage prevention. The tie system shall be demonstrated on the mock-up in advance of construction. The ties shall be designed and installed so as to prevent the loss of paste or moisture. Steel left in the concrete shall be a minimum of 1" back from the concrete surface.

5. Form Leakage Prevention: The approved system shall not leak. In accordance with the forming material selected, a technique shall be demonstrated on the mock-up to prevent mortar loss at form joinery.

   a. Form joints shall be located behind rustications unless approved in writing by Sandia Delegated Representative.

   b. Nonabsorbent type, closed-cell-gasket foam tape may be used in approved locations such as nailed corners in an approved manner demonstrated on the mock-up. This foam tape installation shall be aligned and backed to prevent blowout of the tape.

6. Construction Joints: Construction joints shall occur with the casting of the rustication strip shape planted on the forms of the first casting. Loose concrete dust and other fine materials shall be removed from the surface prior to the erection of the forms. The formwork's bottom rustication for the succeeding lift shall be held tight against the prepared rustication groove at the top of the previous lift and positively gasketed at the inner vertical rustication face to prevent grout or paste leakage.

   a. Forms shall be designed to permit easy removal. Do not pry against the face of the concrete. Only wooden wedges shall be used.

   b. Forms shall be thoroughly cleaned, reconditioned, and recoated with a non staining form release agent prior to each use.

c. Form butt joints not located behind rustications shall be flush, mono-plane, and rendered watertight by one or more of the following methods:

Type of Joint	Suggested Method
Semipermanent	An approved semipermanent sealant such as General Form Joints Electric No. 1200 or Dow Corning No. 781 silicone rubber.
Temporary/Gang Edge Joints	The Contractor may request, and if approved in writing and demonstrated on the mock-up, may use plastic treated tape affixed with waterproof adhesive for specific, unusual, or temporary form conditions. Tape shall be placed on formwork prior to application of release agent. Release agent shall be removed from treated areas where tape is to be applied with a suitable solvent prior to affixing the tape.

2.02 DESIGN OF FORMWORK

A. The Contractor shall retain a Civil Engineer licensed in the State of California to design all formwork and to review and approve the construction loads which will be imposed upon the formwork. Contractor's Engineer shall sign and seal all formwork submittals. Contractor's Engineer shall direct shoring and concrete placement.

B. Design all forms and false-work supports in a manner so that stresses in different members can be determined. Forms shall have sufficient rigidity to keep deflection to a maximum of 1/270 of span. Control spacing and sizes of forming members, and rate of concrete pour in cubic yards per hour, in accordance with ACI 347, in order to meet deflection requirement and to assure a smooth and even appearance of surfaces.

C. The Contractor is responsible for design and erection of formwork for structural stability and sufficiency, dimensions, coordinating his work with that of other trades, and performing his work in a safe and satisfactory manner.

D. Design, erect, support, brace, and maintain formwork so that it will safely support vertical and lateral loads that might be applied, until such loads can be supported by the concrete structure. Carry vertical and lateral loads to ground by formwork system and in-place construction that has attained adequate strength for that purpose.

E. Design forms to include assumed values of live load, dead load, wind load, weight of moving equipment operated on formwork, concrete mix, height of concrete drop, vibrator frequency, ambient temperature, foundation pressures, stresses, lateral stability, and other factors pertinent to safety of structure during construction.

F. Provide shores and struts with positive means of adjustment capable of taking up formwork settlement during concrete placing operations, using wedges or jacks or a combination thereof. Provide trussed supports when adequate foundations for shores and struts cannot be secured.

G. Support form facing materials by structural members spaced sufficiently close to prevent deflection. Fit forms placed in successive units for continuous surfaces to accurate alignment, free from irregularities and within allowable tolerances. Provide camber in formwork as required for anticipated deflections due to weight and pressures of fresh concrete and construction loads for long-span members without intermediate supports.

H. At construction joints, contact surfaces of the form sheathing for flush surfaces exposed to view shall overlap the hardened concrete in the previous placement by not more than 1". The forms shall be held against the hardened concrete to prevent offsets or loss of mortar at the construction joint and to maintain a true surface.

I. Provide temporary openings in wall forms, column forms, and at other locations necessary to permit inspection and cleanout.

J. Design formwork to be readily removable without impact, shock, or damage to concrete surfaces and adjacent materials.

K. Provide formwork sufficiently tight to prevent leakage of cement paste during concrete placement. Solidly butt joints and provide backup material at joints as required to prevent leakage and fins. Seal form joints with foam tape or other demonstrated effective means. Provide a means to seal the bottom of forms at construction joints such as foam tape or other gasket devices.

L. All grade beams and sides of continuous foundations shall be formed. Forms may be omitted and concrete placed directly against excavation only when requested by Contractor and accepted in writing by the Sandia Delegated Representative. When forms are omitted, provide additional concrete required beyond the minimum design profiles and dimensions of the structure.

M In general the contract drawings are made to scale, but scale measurements shall not be used in locating or arranging the members. The fabricator shall check the Contract Drawings before proceeding with detailing or erection of formwork and report errors or inconsistencies discovered therein to Sandia Delegated Representative before starting work.

PART 3 - EXECUTION

3.01 GENERAL

A. Construct forms complying with ACI 347, to the exact sizes, shapes, lines, and dimensions shown, and as required to obtain accurate alignment, location, grades, level and plumb work in finished structures. Provide for openings, offsets, sinkages, keyways, recesses, moldings, rustications, reglets, chamfers, blocking screeds, bulkheads, anchorages and inserts, and other features required. Use selected materials to obtain required finishes.

B. Fabricate forms for easy removal without hammering or prying against concrete surfaces. Provide crush plates or wrecking plates where stripping may damage cast concrete surfaces. Provide top forms for inclined surfaces where the slope is too steep to place concrete with bottom forms only. Kerf wood inserts for forming keyways, reglets, recesses, and the like to prevent swelling and assure ease of removal.

C. Provide temporary openings where interior area of formwork is inaccessible for cleanout, for observation before concrete placement, and for placement of concrete. Brace temporary closures and set tightly to forms to prevent loss of concrete mortar. Locate temporary openings on forms in as inconspicuous location as possible, consistent with project requirements.

D. Form intersecting planes to provide true, clean-cut corners, with edge grain of plywood not exposed as form for concrete.

E. Provide openings in forms to accommodate other work, including mechanical and electrical work. Accurately place and securely support items required to be built into the forms.

F. Wood forms for wall openings shall be constructed to facilitate loosening, if necessary, to counteract swelling of the forms.

G. Wedges used for final adjustment of the forms prior to concrete placement shall be fastened in position after the final check.

H. Formwork shall be so anchored to shores or other supporting surfaces or members that upward or lateral movement of any part of the formwork system during concrete placement will be prevented.

I. Runways for moving equipment shall be provided with struts or legs and shall be supported directly on the formwork or structural members without resting on the reinforcing steel.

J. Control Joints: See Specification Section 03300 for treatment of control and construction joints, including wood screeds, metal keyways, and saw cuts. Locate as indicated.

K. Cleaning and Tightening: Thoroughly clean forms and adjacent surfaces to receive concrete. Remove chips, wood, sawdust, dirt, or other debris just before concrete is to be placed. Retighten forms immediately after concrete placement as required to eliminate mortar leaks.

L. Corner Treatment:

1. Exposed corners shall be chamfered except as otherwise shown.

2. Form chamfers with 3/4" x 3/4" strips, unless otherwise shown, accurately formed and surfaced to produce uniformly straight lines and tight edge joints. Extend terminal edges to required limit and miter chamfer strips at changes in direction.

3. Unexposed corners may be formed either square or chamfered.

3.02 FORMS FOR EXPOSED CONCRETE

A. Unless otherwise indicated, construct formwork for exposed concrete from materials capable of providing continuous, straight, as-cast surfaces. Furnish in largest practicable sizes to minimize number of joints and to conform to joint system shown on drawings.

B. Drill forms to suit ties used and to prevent leakage of concrete mortar around tie holes. Do not splinter forms by driving ties through improperly prepared holes

C. Do not use metal cover plates for patching holes or defects in forms.

D. Provide sharp, clean corners at intersecting planes, without visible edges or offsets. Back joints with extra studs or girts to maintain true, square intersections.

E. Use extra studs, walers, and bracing to prevent bowing of forms between studs and to avoid bowed appearance in concrete. Do not use narrow strips of form material which will produce bow.

F. Assemble forms to be readily removed without damage to exposed concrete surfaces.

G. Form molded shapes, recesses, and projections with smooth-finish materials, and install in forms with sealed joints to prevent displacement.

3.03 SHORES AND SUPPORTS

A. Comply with ACI 347 for shoring and reshoring, and as herein specified.

B. When reshoring is permitted or required, the operations shall be planned in advance and shall be subject to approval by the Sandia Delegated Representative. While reshoring is under way, no live load shall be permitted on the new construction.

C. In no case during reshoring shall concrete in beam, slab, column, or any other structural member be subjected to combined dead and construction loads in excess of the loads permitted for the developed concrete strength at the time of reshoring.

D. Reshores shall be placed as soon as practicable after stripping operations are complete but in no case later than the end of the workday on which stripping occurs.

E. Reshores shall be tightened to carry their required loads without overstressing the construction. Reshores shall remain in place until tests representative of the concrete being supported have reached the specified ultimate compressive strength, or the strength specified in the contract documents for removal of reshores.

3.04 FORM COATINGS

A. Coat form contact surfaces with form-coating compound before reinforcement is placed. Do not allow excess form coating to accumulate in the forms or to come into contact with surfaces which will be bonded to fresh concrete. Apply in compliance with manufacturer's instructions.

B. Coat steel forms with a nonstaining, rust-preventive form oil or otherwise protect against rusting. Rust-stained steel formwork is not acceptable.

3.05 INSTALLATION OF EMBEDDED ITEMS

A. General: Set and build into the work anchorage devices and other embedded items required for other work that is attached to, or supported by, concrete. Use setting drawings, diagrams, instructions, and directions provided by suppliers of the items to be attached thereto.

B. Edge Forms and Screed Strips for Slabs: Set edge form or bulkheads and intermediate screed strips for slabs to obtain required elevations and contours in the finished slab surface. Provide and secure units to support types of screeds required.

3.06 REMOVAL OF FORMS

A. General: Formwork not supporting concrete, such as sides of beams, walls, columns, and similar parts of the work, may be removed after cumulatively curing at not less than 50 degrees F. for 24 hours after placing concrete, provided concrete is sufficiently hard to not be damaged by form removal operations, and provided that curing and protection operations are maintained.

B. Formwork supporting weight of concrete, such as slabs and other structural elements may not be removed in less than 14 days and not until concrete has attained design minimum 28-day compressive strength. Determine potential compressive strength of in-place concrete by testing field-cured specimens representative of the concrete location or members under the least favorable conditions prevailing for any portion of the concrete.

C. Form facing material may be removed 4 days after placement, only if shores and other vertical supports have been arranged to permit removal of form facing material without loosening or disturbing shores and supports.

3.07 REUSE OF FORMS

A. Clean and repair surfaces of forms to be reused in the work. Split, frayed, delaminated, or otherwise damaged form facing material will not be acceptable. Apply new form coating compound material to concrete contact surfaces as specified for new formwork.

B. When forms are extended for successive concrete placement, thoroughly clean surfaces, remove fins and laitance, and tighten forms to close joints. Align and secure joints to avoid offsets. Do not use "patched" forms for exposed concrete surfaces, except as acceptable to the Sandia Delegated Representative.

END OF SECTION

SECTION 03200

CONCRETE REINFORCEMENT

PART 1 - GENERAL

1.01 RELATED DOCUMENTS

Drawings and general provisions of contract, including General and supplementary Conditions and Divisions-1 Specification Sections, apply to work of this section as if repeated herein.

1.02 DESCRIPTION

A. Work under this section consists of furnishing everything necessary for and incidental to the execution and completion of concrete reinforcement work, as indicated on the drawings and specified herein.

B. The extent of concrete reinforcement is shown on the drawings and in the schedules.

C. The work includes fabrication and placement of reinforcement for all cast-in-place concrete, including bars, ties and supports.

D. Provide reinforcing for mock-up or sample panels as may be required for the cast-in-place concrete work specified.

1.03 QUALITY ASSURANCE

A. Codes and Standards: Comply with requirements of the latest edition of the following codes and standards, except as herein modified:

1. American Welding Society, AWS D1.4, "Structural Welding Code-Reinforcing Steel"

2. Concrete Reinforcing Steel Institute, "Recommended Practice for Placing Reinforcing Bars"

3. Concrete Reinforcing Steel Institute, "Manual of Standard Practice for Reinforced Concrete Construction"

4. American Concrete Institute, ACI 318, "Building Code Requirements for Reinforced Concrete"

5. American Concrete Institute, ACI 315: "Manual of Standard Practice for Detailing Reinforced Concrete Structures"

6. ASTM A615: Specifications for Deformed and Plain Billet- Steel

7. ASTM A706: Specifications for low-alloy steel deformed bars for concrete reinforcement.

B. Qualifications for Welding Work:

1. Qualify welding processes and welding operators in accordance with the AWS "Standard Qualification Procedure."

2. Provide certification that welders to be employed in the work have satisfactorily passed AWS qualification tests within the previous 3 months. Submit certification to Sandia Delegated Representative a minimum of 15 days prior to performing any welding.

3. If recertification of welders is required, retesting will be the Contractor's responsibility.

1.04 SUBMITTALS

A. Manufacturer's Data: Submit copies of specifications and installation instructions for proprietary materials and reinforcement accessories.

B. Mill Test Reports: Furnish test reports certifying that the materials or product delivered to the job meet specified requirements.

C. Shop Drawings:

1. In accordance with Specification Section 01300, submit shop drawings for fabrication, bending and placement of concrete reinforcement. Comply with the ACI "Manual of Standard Practice for Detailing Reinforced Concrete Structures." Show bar schedules, stirrup spacing, diagrams of bent bars, arrangements, and assemblies, and mark numbers as required for the fabrication and placement of concrete reinforcement. Do not use design drawings for shop drawings.

2. Corrections or comments made on shop drawings during Sandia Delegated Representative's review do not relieve the Contractor from compliance with requirements of the drawings and specifications. The review is only for general conformance with the design concept of the project and general compliance with the information given in the contract documents. The Contractor is responsible for confirming and correlating quantities and

dimensions, coordinating his work with that of other trades, and performing his work in a safe and satisfactory manner.

3. In general, the drawings are made to scale, but scale measurements shall not be used in locating or arranging the members. The fabricator shall check the contract drawings before proceeding with detailing and report errors or inconsistencies discovered therein to the Sandia Delegated Representative before starting shop detailing.

4. Revisions shown on the shop drawings shall be considered as changes necessary to meet specified requirements and shall not be taken as the basis of claims for extra work.

1.05 PRODUCT DELIVERY, HANDLING AND STORAGE

A. Deliver reinforcement to the project site bundled, tagged and marked. Use weatherproof tags indicating bar size, lengths, and other information corresponding to markings shown on placement diagrams. Deliver reinforcement clean and free from loose mill and rust scale, dirt and other coatings.

B. Store concrete reinforcement materials at the site to prevent damage and accumulation of dirt, excessive rust and grease. Store materials to permit easy access for inspection and identification.

C. Exercise care to prevent damage to steel reinforcement during delivery and storage.

PART 2 - PRODUCTS

2.01 MATERIALS

A. Reinforcing Bars (Rebar): ASTM A615, Grade 60

B. Reinforcing Bar (for Welding): ASTM A706, Grade 60

C. Steel Wire: ASTM A82

1. Furnish in flat sheets, not rolls.

D. Column Spirals: Plain, cold-drawn wire, ASTM A82, or hot-rolled rods for spirals, ASTM A615.

E. Supports for Reinforcement: Bolsters, chairs, spacers and other devices for spacing, supporting and fastening reinforcement in place.

1. Use wire bar type supports complying with CRSI recommendations. Do not use wood, brick, or other unacceptable materials.

2. For slabs on grade, use supports with sand plates or horizontal runners where base material will not support chair legs.

3. For exposed-to-view concrete surfaces, where legs of supports are in contact with forms, provide support with either hot-dip galvanized (CRSI, Class B) or plastic protected (CRSI, Class C), or stainless steel protected legs (CRSI, Class D), at Contractor's option.

4. For abrasive-blasted or bush-hammered concrete, provide special stainless bar supports (CRSI, Class E).

5. Over waterproof membranes, use precast-concrete block bar supports to prevent penetration of the membrane.

F. Tie Wire: 16 gage minimum and in sufficient quantity to hold reinforcement accurately in place during concrete placement operations.

2.02 FABRICATION

A. General: Fabricate reinforcing bars to conform to required shapes and dimensions, with fabrication tolerances complying with CRSI "Manual of Standard Practice." In case of fabricating errors, do not rebend or straighten reinforcement in a manner that will injure or weaken the material.

B. Unacceptable Materials: Reinforcement with any of the following defects will not be permitted in the work:

1. Bar lengths, depths and bends exceeding specified fabrication tolerances

2. Bend or kinks not indicated on drawings or final shop drawings

3. Bars with reduced cross section due to excessive rusting or other cause

PART 3 - EXECUTION

3.01 INSTALLATION

A. Comply with the specified codes and standards and Concrete Reinforcing Steel Institute's recommended practice for "Placing Reinforcing Bars" for details and methods of reinforcement placement and support and as herein specified.

B. Clean reinforcement to remove loose rust and mill scale, earth, ice and other materials that reduce or destroy bond with concrete.

C. Accurately position, support, and secure reinforcement against displacement by formwork, construction, or concrete placement operations. Locate and support reinforcing by metal chairs, runners, bolsters, spacers and hangers, as required.

D. Place reinforcement to obtain the minimum coverages for concrete protection as per ACI 318. Arrange, space and securely tie bars and bar supports together with 16-gage wire to hold reinforcement accurately in position during concrete placement operations. Set wire ties so that twisted ends are directed away from exposed concrete surfaces.

E. Provide sufficient numbers of supports and of strength to carry reinforcement. Do not place reinforcing bars more than 2" beyond the last leg of any continuous bar support. Do not use supports as bases for runways for concrete conveying equipment and similar construction loads.

F. Splices: Provide standard reinforcement splices by lapping ends, placing bars in contact, and tightly wire tying. In the absence of splice locations shown on the drawings, splice top bars at midspan and bottom bars at supports.

END OF SECTION

SECTION 03300

CAST-IN-PLACE CONCRETE

PART 1 - GENERAL

1.01 RELATED DOCUMENTS

Drawings and general provisions of Contract, including General and Supplementary Conditions and Division-1 Specification Sections, apply to work of this section as if repeated herein.

1.02 DESCRIPTION

Work under this section consists of furnishing everything necessary for and incidental to the execution and completion of all cast-in-place concrete work, as indicated on the drawings and specified herein.

1.03 QUALITY ASSURANCE

A. Codes and Standards:

1. Comply with the provisions of the following codes, specifications and standards except where more stringent requirements are shown or specified:

   a. ACI 301, "Specifications for Structural Concrete for Buildings."

   b. ACI 304, "Recommended Practice for Measuring, Mixing, Transporting and Placing Concrete."

   c. ACI 311, "Recommended Practice for Concrete Inspection."

   d. ACI 315, "Manual of Standard Practice for Detailing Reinforced Concrete Structures."

   e. ACI 318, "Building Code Requirements for Reinforced Concrete."

   f. Concrete Reinforcing Steel Institute, "Manual of Standard Practice."

B. Workmanship:

1. The Contractor is responsible for correction of concrete work which does not conform to the specified requirements, including strength, tolerances, and finishes. Correct deficient concrete as required by the specifications.

1.04 SUBMITTALS

A. Manufacturer's Data: Submit manufacturer's product data with application and installation instructions for proprietary materials and items, including admixtures, bonding agents, form release agents, patching compounds, waterstops, joint systems, chemical floor hardeners, and others as requested by Sandia Delegated Representative.

B. Samples, Concrete Work: Submit samples of materials as specified and as otherwise may be requested by the Sandia Delegated Representative, including names, sources, and descriptions as required.

1.05 PRODUCT DELIVERY, STORAGE AND HANDLING

A. Cement: Store cement in watertight buildings, bins, or silos.

B. Aggregate: Stockpile aggregate in a manner to prevent contamination with other materials or with other sizes of aggregate. To ensure this condition, conduct tests for determining conformance to requirements at the point of batching. Allow sand to drain until it has reached a uniform moisture content before it is used.

C. Admixtures: Store admixtures in a manner to prevent contamination. Protect admixtures from extreme temperatures which would adversely affect their characteristics.

PART 2 - PRODUCTS

2.01 CONCRETE MATERIALS

A. Portland Cement: ASTM C150 as follows:

1. Provide Type II cement, except as otherwise indicated.

2. Use only one brand and one type of cement throughout the project, unless otherwise approved in writing by the Sandia Delegated Representative.

B. Aggregates: ASTM C33, and as herein specified. No more than 60% Livermore aggregate shall be allowed.

1. Local aggregates not complying with ASTM C33 but which have shown by special test or actual service to produce concrete of adequate strength and durability may be used when acceptable to the Sandia Delegated Representative.

2. Do not use aggregates containing soluble salts or other substances such as iron sulphides, pyrite, marcasite, or ochre, which can cause stains on exposed concrete surfaces.

3. Fine Aggregate: Clean, sharp, natural sand free from loam, clay, lumps or other deleterious substances.

4. Coarse Aggregate: Clean, uncoated, processed aggregate containing no clay, mud, loam, or foreign matter, as follows:

   a. Crushed stone, processed from natural rock or stone.

   b. Washed gravel, either natural or crushed. Use of pit or bank run gravel is not permitted. Aggregate to have minimum of two fractured faces.

   c. Maximum Aggregate Size: Not larger than one-fifth of the narrowest dimension between sides of forms, one-third of the depth of slabs, or wall, nor three-fourths of the minimum clear spacing between individual reinforcing bars or bundles of bars. These limitations may be waived if, in the judgment of the Sandia Delegated Representative, workability and methods of consolidation are such that concrete can be placed without honeycomb or voids.

C. Water: Clean, fresh, potable.

D. Vapor Barrier: Provide under slabs on grade that are scheduled to receive resilient flooring materials.

1. Polyethylene sheeting conforming to Product Standard PS17, not less than 6 mil nominal thickness.

2. Other similar material having a vapor permeance rating not exceeding 0.5 perm as determine under ASTM E96, Procedure E.

2.02 CONCRETE ADMIXTURES

A. Provide admixtures produced by established reputable manufacturers and use in compliance with the manufacturer's printed directions. Do not use admixtures which have not been incorporated and tested in the accepted mixes, unless otherwise authorized in writing by the Sandia Delegated Representative.

B. Air-Entraining Admixture: ASTM C 260.

C. Water-Reducing Admixture: ASTM C 494, Type A.

D. Set-Control Admixtures: ASTM C 494.

E. Superplasticizers: The superplasticizer to produce rheoplastic concrete shall conform to ASTM-C-494, Type F or G. The admixture shall be free of chlorides and alkalies, and be of the synthesized sulfonated complex polymer type which

shall be added to the concrete mixer at the central batch plant, or on site as recommended by the concrete supplier. Dosage as recommended by the manufacturer.

F. Fly Ash: Fly ash which may be used to reduce cement content shall conform to ASTM C618, Class C. Fly ash may replace up to 20 percent of cement by the use of 125 pounds of fly ash for each 100 pounds of cement removed. Submit mix design and test reports verifying compliance.

G. Calcium chloride or admixtures containing calcium chloride will not be permitted in concrete.

2.03 RELATED MATERIALS

A. Waterstops: Provide waterstops at construction joints and other joints of type and size shown on drawings.

1. Provide either rubber or PVC waterstops, at Contractor's option, with rubber units complying with Corps of Engineers CRD-C513 and PVC units complying with CRD-C572. Configuration of waterstop shall be as shown on the drawings.

B. Concrete Control/Expansion Joint Fillers: See Section 07910, Joint Fillers and Gaskets.

C. Joint Sealing Compound: See Section 07900 - Sealants

D. Bonding Agent:

1. Chemical Bonding Agent - Film forming, freeze thaw-resistant compound suitable for brush or spray application complying with Mil-B-19235.

2. Epoxy-Resin Bonding Agent - 2-component, mineral filled, epoxy-polysulfide polymer complying with FS MMM-G-650, Type I or Type II, Grade A.

E. Chemical floor hardener shall be colorless aqueous solution containing not less than two pounds of zinc and/or magnesium fluosilicate per gallon or sodium silicate solution having a specific gravity of 16.7 degrees Baume, or an approved proprietary hardener of proven and satisfactory performance delivered ready for use in the manufacturer's original containers.

2.04 CONCRETE CURING MATERIALS

A. Absorptive Cover: Burlap cloth made from jute or kenaf, weighing approximately 9 oz. per sq. yd. complying with AASHTO M 182, Class 3.

B. Moisture-Retaining Cover: One of the following, complying with ASTM C 171.

1. Waterproof paper.

2. Polyethylene film - white opaque.

3. White burlap-polyethylene sheet.

C. Membrane-Forming Curing Compound: ASTM C 309, Type I with fugitive dye. Membrane-forming curing compound shall be compatible with floor toppings, hardeners and resilient floor coverings.

D. Resin Base Liquid Membrane-Forming Curing Compound: Federal Spec TT-C-800, Type I with fugitive dye. Membrane-forming curing compound shall be compatible with floor toppings, hardeners and resilient floor coverings.

2.05 CONCRETE MIX DESIGN AND TESTING

A. Comply with the applicable requirements of Section 01400 for mix design and testing of concrete as herein specified.

B. All concrete, cured and tested in accordance with applicable ASTM standards shall develop an ultimate strength at 28 days as herein specified.

C. In accordance with applicable provisions of ASTM C94, prepare design mixes for each type and strength of concrete as follows:

1. Standard weight concrete consisting of the specified Portland cement, aggregates, admixtures, and water to produce the following strengths:

a. Compressive strength: 4000 psi minimum at 28 days.

2. Light weight concrete consisting of the specified Portland cement, aggregates, admixtures, and water to produce the following strengths:

a. Compressive strength: 3000 psi minimum at 28 days.

D. Proportion mixes by either laboratory trial batch or field experience method, using materials to be employed on the project for each class of concrete required, complying with ACI 211.1 for normal weight concrete and report to Sandia Delegated Representative the following data:

1. Complete identification of aggregate source of supply.

2. Tests of aggregates for compliance with specified requirements.

3. Scale weight of each aggregate.

4. Absorbed water in each aggregate.

5. Brand, type, and composition of cement.

6. Brand, type, and amount of each admixture.

7. Amounts of water used in trial mixes.

8. Proportions of each material per cu. yd.

9. Gross weight and yield per cu. yd. of trial mixtures.

10. Measured slump.

11. Measured air content.

12. Compressive strength developed at 7 days and 28 days from not less than three (3) test cylinders cast for each 7- and 28-day test, and for each design mix.

E. Submit written reports to the Sandia Delegated Representative of each proposed mix for each type of concrete at least 15 days prior to start of work. Do not begin concrete production until mixes have been reviewed and approved by Sandia Delegated Representative.

F. Laboratory Trial Batches: When laboratory trial batches are used to select concrete proportions, prepare test specimens in accordance with ASTM C 192 and conduct strength tests in accordance with ASTM C 39.

1. For concrete other than lightweight concrete, establish a curve showing relationship between water-cement ratio (or cement content) and compressive strength, with at least 3 points representing batches which produce strengths above and below that required. Use not less than 3 specimens tested at 28-days or an earlier age when acceptable to the Sandia Delegated Representative, to establish each point on the curve. The maximum allowable water-cement ratio for the concrete for the structure shall be as determined from these curves and shall correspond to an average compressive strength 15 percent greater than the specified strength.

G. Field Experience Method: When field experience methods are used to select concrete proportions, establish proportions as specified in ACI 301.

1. Strength data for establishing standard deviation will be considered suitable if the concrete production facility has certified records consisting of at least 30 consecutive tests in one group or the statistical average for 2 groups totalling 30 or more tests, representing similar materials and project conditions

a. Standard Deviation: If standard deviation exceeds 600 psi or if no suitable records available, select proportions to produce an average strength of at least 1200 psi greater than the required compressive strength of concrete.

b. After sufficient experience and test data become available from the job, using ACI 214 methods of evaluation, the standard deviation may be reduced when the probable frequency of tests more than 500 psi below required compressive strength will not exceed 1 in 100, and that the probable frequency of an average of 3 consecutive tests below required compressive strength will not exceed 1 in 100.

H. Adjustment to Concrete Mixes: Mix design adjustments may be requested by the Contractor when characteristics of materials, job conditions, weather, test results, or other circumstances warrant; at no additional cost to Sandia National Laboratories and as accepted by the Sandia Delegated Representative. Laboratory test data for revised mix design and strength results must be submitted to and accepted by Sandia Delegated Representative before using in the work.

I. Admixtures:

1. Use air-entraining admixture in all concrete, unless otherwise indicated. Add air-entraining admixture at the manufacturer's prescribed rate to result in concrete at the point of placement having air content within the following limits:

   4% for maximum 2" aggregate
   6% for maximum 3/4" aggregate
   7% for maximum 1/2" aggregate
   5% plus or minus 1% for all Architectural Cast-in-Place Concrete

2. Use admixtures for water-reducing and set-control in strict compliance with the manufacturer's directions.

3. Use amounts of admixtures as recommended by the manufacturer for climatic conditions prevailing at the time of placing. Adjust quantities and types of admixtures as required to maintain quality control.

4. Air content should be measured using the pressure method described in ASTM C231 for normal weight concrete.

J. Slump Limits:

1. Proportion and design mixes to result in concrete slump at the point of placement as follows:

   a. Ramps and Sloping Surfaces: Not more than 3".

b. Reinforced Foundation Systems: Not less than 1" and not more than 3".

c. All other Normal Weight Concrete: Not less than 1" and not more than 4".

PART 3 - EXECUTION

3.01 CONCRETE MIXING

A. General: Concrete may be mixed at batch plants or it may be transit-mixed as specified herein. Batch plants must comply with the requirements of ACI 304, with sufficient capacity to produce concrete of the qualities specified and in quantities required to meet the construction schedule. All plant facilities are subject to testing laboratory inspection and acceptance of Sandia Delegated Representative. Maintain equipment in proper operating condition, with drums cleaned before charging each batch. Schedule rates of delivery in order to prevent delay of placing the concrete after mixing, or holding dry-mixed materials too long in the mixer before the addition of water and admixtures.

B. Ready-Mix Concrete:

1. Comply with the requirements of ASTM C94, and as herein specified. Proposed changes in mixing procedures must be accepted by the Sandia Delegated Representative before implementation. Plant equipment and facilities should conform to National Ready-Mix Concrete Association "Checklist for Certification of Ready-Mixed Concrete Production Facilities."

2. When the air temperature is 90 degrees F or greater, the maximum mixing and delivery time shall be reduced to 60 minutes. Additional reductions in mixing and delivery time may be required when weather or other conditions exist that contribute to rapid setting of concrete. When a truck mixer is used for the complete mixing of the concrete, begin the mixing operation within 30 minutes after the cement has been intermingled with the aggregates.

3. Furnish duplicate delivery tickets with each load of concrete delivered to the site, one for Sandia Delegated Representative and one for the Contractor. In addition to the requirements of ASTM C94, provide the following information on delivery tickets:

Type and brand of cement
Cement content per cu. yd. of concrete
Maximum size of aggregate
Total water content expressed as water/cement ratio
Amount of water added at jobsite
Mix design number

C. Retempering: Mix concrete only in quantities for immediate use. Discard concrete which has set; do not retemper. Adding water to the mix at the jobsite will not be permitted unless prior approval is obtained from Sandia Delegated Representative.

3.02 PREPARATION

A. Preplacement Inspection:

1. Before placing concrete, coordinate, inspect, and complete the formwork installation, reinforcing steel, preformed joint fillers, vapor barriers, water stops and items to be embedded or cast-in. Notify other crafts involved in ample time to permit the installation of their work. Cooperate with other trades in setting such work as required. All embedded items shall be secure in position before concrete is placed.

2. Thoroughly wet wood forms immediately before placing concrete, as required where form coatings are not used. Where coating is used, apply with a brush or spray covering the form evenly without excess drip. Do not use form oil which causes softening or permanent staining of the concrete.

3. Bearing stratum at bottom of foundation systems is subject to testing for soil bearing value by the testing laboratory, as directed by the Sandia Delegated Representative. Place concrete immediately after approval of foundation excavations. Excavate and backfill as necessary to complete the concrete work. Place concrete on subgrades that are well compacted to level and true grade. Before concrete is placed in areas between slabs on grade previously placed, recheck compaction of subgrade and if necessary, recompact to avoid settlement of slabs at joints. Remove all ice, debris and excess water from subgrades. After completion of the concrete work, backfill all excavations in accordance with Specification Section 02220.

4. The installation of anchors, inserts, and sleeves for electrical, mechanical plumbing, heating, ventilating, and air-conditioning work is subject to the inspection and approval of the supervisors of the particular trades involved. Finish void in sleeves and inserts temporarily with readily removable material.

5. Notify Sandia Delegated Representative 24 hours before placing concrete.

3.03 CONCRETE PLACEMENT

A. General: Place concrete in compliance with the practices andrecommendations of ACI 304, and as specified herein. Do not place any concrete until Sandia Delegated Representative has reviewed the results of the design mix 28 day test breaks and approval is given to proceed.

1. Deposit concrete continuously or in layers of such thickness that no concrete will be placed on concrete which has hardened sufficiently to cause the formation of seams or planes of weakness within the section. If a section cannot be placed continuously, provide construction joints as herein specified. Perform concrete placing at such a rate that concrete which is being integrated with fresh concrete is still plastic. Deposit concrete as nearly as practicable to its final location to avoid segregation due to rehandling or flowing. Do not subject concrete to any procedure which will cause segregation.

2. Screed concrete which is to receive other construction to the proper level to avoid excessive shimming or grouting.

3. Do not use concrete which becomes nonplastic and unworkable, or does not meet the required quality control limits, or which has been contaminated by foreign materials. Do not use retempered concrete. Remove rejected concrete from the project site and dispose of in an acceptable location.

B. Concrete Conveying:

1. General: Handle concrete from the mixer to the place of final deposit as rapidly as practicable and in a manner which will assure that the specified quality of the concrete is obtained.

2. Equipment: Provide conveying equipment of proper size and design to ensure a continuous flow of concrete at the delivery end. Conveying equipment will be subject to Sandia Delegated Representative's approval. Conform to the following:

   a. Truck mixers, agitators, and nonagitating units and their manner of operation shall conform to the applicable requirements of ASTM C94.

   b. Belt Conveyors: Provide belt conveyors and discharge apparatus of a type which will not cause segregation. Discharge long runs into a hopper.

   c. Chutes: Provide metal or metal-lined chutes and install to a slope not flatter than 1 to 3 nor steeper than 1 to 2. Chutes more than 20 feet long and chutes not meeting the slope requirements may be used, provided they discharge into a hopper.

   d. Runways: Provide runways or other means for wheeled equipment to convey concrete to placement points. Do not support runways on reinforcement, nor wheel equipment over reinforcement.

e. Pumps: Do not pump concrete without the Sandia Delegated Representative's approval. Any change in concrete mix necessitated by pumping must be approved by Sandia Delegated Representative prior to placing concrete by this method.

C. Placing Concrete Into Forms:

1. Deposit concrete in forms in horizontal layers not deeper than 24" and in a manner to avoid inclined construction joints. Where placement consists of several layers, place each layer while preceding layer is still plastic to avoid cold joints.

2. Remove temporary spreaders in forms when concrete placing has reached the elevation of such spreaders.

3. Consolidate concrete, including floor slabs on grade, by internal concrete vibrators supplemented by hand-spading, rodding, or tamping so that the concrete is thoroughly worked around reinforcement and embedded items and into the corners of forms. Consolidate each layer of concrete with previously placed_layers in a manner that will eliminate all air or stone pockets which may cause honeycombing, pitting, or planes of weakness. Internal vibrators shall produce a minimum frequency of 7000 impulses per minute when submerged in concrete. Do not use vibrators to transport concrete. Insert and withdraw vibrators at uniformly spaced points not farther apart than the visible effectiveness of the machine. Duration of vibration shall be limited to time necessary to produce satisfactory consolidation without causing objectionable segregation. The vibrating equipment shall at all times be adequate in number of units and power to properly consolidate all concrete. Spare units shall be on hand as necessary to ensure such adequacy.

4. Formed Elements: Use internal vibrators, not form vibrators. When a surface mortar is to be the basis of the finish, work coarse aggregate back from the forms with a suitable tool to bring a full surface of mortar against the form.

5. Supported Elements: Consolidate elevated slabs with vibrating bridge screeds, roller pipe screeds, or other means approved by Sandia Delegated Representative. Tamp slabs to force aggregates away from surface and screed level to comply with ACI 347. After screeding, do not manipulate concrete prior to commencing finishing operation.

6. Bring slab surfaces to the correct level with a straight- edge and strike off. Use bull floats or darbies to smooth the surface, leaving it free of humps or hollows. Do not sprinkle water on the plastic surface. Do not disturb the slab surfaces prior to beginning finishing operations.

7. Maintain reinforcing steel in the proper position continuously during concrete placement operations.

8. Do not drop concrete freely where reinforcing bars will cause segregation, nor drop freely more than six feet. Use tremies in length increments of six feet.

D. Special Placing Requirement for Slab on Grade:

1. The Contractor shall have a sufficient number of qualified personnel available at all times while concrete is being placed, to ensure proper placing, finishing, and curing.

E. Bonding:

1. Roughen surfaces of set concrete at all joints, except where bonding is obtained by use of a concrete bonding agent, and clean surfaces of laitance, coatings, loose particles, and foreign matter. Roughen surfaces in a manner to expose bonded aggregate uniformly and to not leave laitance, loose particles of aggregate, or damaged concrete at the surface.

2. Prepare for bonding of fresh concrete to new concrete that has set but is not fully cured, as follows:

a. At joints between footings and walls and between walls and beams or slabs they support, and elsewhere unless otherwise specified herein, dampen, but do not saturate, the roughened and cleaned surface of set concrete immediately before placing fresh concrete.

b. At joints in exposed work; at vertical joints in walls; at joints in girders, beams, supported slabs, and other structural members; and at joints designed to contain liquids; dampen, but do not saturate, the roughened and cleaned surface of set concrete and apply either a liberal coating of neat cement grout or a commercial bonding agent.

c. Use neat cement grout consisting of equal parts Portland cement and fine aggregate by weight and not more than 6 gallons of water per sack of cement. Apply with a stiff broom or brush to a minimum thickness of 1/16". Deposit fresh concrete before cement grout has attained its initial set.

d. Apply commercial bonding agent to cleaned concrete surfaces in accordance with the printed instructions of the bonding material manufacturer.

3. Prepare for bonding of fresh concrete to fully cured hardened concrete or existing concrete by using an epoxy-resin bonding agent as follows:

a. Handle and store epoxy-resin adhesive binder in compliance with the manufacturer's printed instructions, including safety precautions.

b. Mix the epoxy-resin adhesive binder in the proportions recommended by the manufacturer, carefully following directions for safety of personnel.

c. Before depositing fresh concrete, thoroughly roughen and clean hardened concrete surfaces and coat with epoxy-resin grout not less than 1/16" thick. Place fresh concrete while the epoxy-resin material is still tacky, without removing the in-place grout coat, and as directed by the epoxy-resin manufacturer.

F. Cold Weather Placing:

1. Protect concrete work from physical damage or reduced strength which could be caused by frost, freezing actions, or low temperatures, in compliance with the requirements of ACI 306 and as herein specified.

2. When the air temperature has fallen to or is expected to fall below 40 degrees F., provide adequate means to maintain the temperature in the area_where concrete is being placed at either 70 degrees F. for 3 days or 50 degrees F. for 5 days after placing. Provide temporary housings or coverings including tarpaulins or plastic film. Keep protections in place and intact at least 24 hours after artificial heat is discontinued. Avoid rapid dry-out of concrete due to overheating, and avoid thermal shock due to sudden cooling or heating.

3. When air temperature has fallen or is expected to fall below 40 degrees F., uniformly heat all water and aggregates before mixing as required to obtain a concrete mixture temperature of not less than 50 degrees F. and not more than 80 degrees F. at point of placement.

4. Do not use frozen materials containing ice or snow. Do not place concrete on frozen subgrade or on subgrade containing frozen materials. Ascertain that forms, reinforcing steel, and adjacent concrete surfaces are entirely free of frost, snow, and ice before placing concrete.

5. Do not use calcium chloride, salt, and other materials containing antifreeze agents or chemical accelerators, unless otherwise accepted in mix designs.

6. Use set-control admixtures when required and accepted in mix designs.

G. Hot Weather Placing:

1. When hot weather conditions exist that would seriously impair the quality and strength of concrete, place concrete in compliance with ACI 305 and as herein specified.

2. Temperature of concrete at time of placing shall not exceed 90 degrees F. Contractor shall maintain an accurate reading thermometer at the jobsite to

check temperature of concrete. Concrete shall be rejected before placing if temperature of concrete exceeds 90 degrees F.

3. Special precautions to protect fresh concrete before and during finishing shall be mandatory when the rate of evaporation of surface moisture from concrete exceeds 0.2 pounds per square foot per hour. Rate of evaporation shall be determined in accordance with ACI 305. Special precautions shall include the following:

    a. Good planning and close coordination between supplier and jobsite shall be maintained to ensure prompt placement of concrete upon arrival at jobsite.

    b. Cool ingredients before mixing to reduce concrete temperature at time of placement. Mixing water may be chilled, or chopped ice may be used to control the concrete temperature provided the water equivalent of the ice is calculated to the total amount of mixing water.

    c. Dampen subgrade and forms.

    d. Erect windbreaks to reduce wind velocity over the concrete.

    e. Erect sunshades to reduce concrete surface temperatures.

    f. Cover reinforcing steel with water-soaked burlap so that the steel temperature will not exceed the ambient air temperature immediately before embedment in concrete.

    g. Utilize fogging to cool and moisten surrounding air. Fog nozzles, specially designed for concrete fogging, which produce a fog blanket shall be used. Common garden hose nozzles or other nozzles which produce an excessive washing spray shall not be allowed.

    h. Provide temporary covering such as wet burlap, plastic membrane, curing paper, or other suitable means.

    i. Use set control admixtures when required and accepted in mix design.

H. Underwater Placing:

1. Concrete placement in water will only be permitted if conditions render it impossible or inadvisable to dewater excavations before placing concrete, and only when acceptable to Sandia Delegated Representative.

2. Revise the concrete mix design to suit underwater placement requirements, and submit to Sandia Delegated Representative for acceptance before commencing underwater placement operations. Deposit concrete by the

tremie method, or other suitable means, in continuous placement to prevent formation of layers or the intrusion of water.

3.04 JOINTS

A. Slabs on Grade:

1. No reinforcement, corner protection angles, or other fixed metal items shall be run continuous through joints containing expansion-joint filler, through crack-control joints in slabs on grade, or through joints between slabs on grade and vertical surfaces, except as indicated on the drawings. Reinforcement shall be interrupted, 2 inches clear on each side, at crack-control joints.

2. Floor slab control joints (construction joints and sawed joints) shall be as shown on the drawings. Any deviation from joint layout as shown shall be approved in writing before placing concrete. Where sawed joints are shown, sawing shall be performed a maximum of two (2) days after concrete is placed. Joints in curbs shall coincide with floor joints.

3. Where indicated, joints between interior slabs on grade and vertical surfaces, unless otherwise shown, shall be of 1/4 inch premolded expansion material extending full slab depth. The perimeters of slabs at the joints shall be free of fins, rough edges, spalling, or other unsightly appearance.

4. At expansion joints in concrete slabs to be exposed, expansion joints where filler is completely covered by base and shoe mold, and at other joints indicated to receive joint sealant, premolded expansion-joint filler strips shall be installed at the proper level below the finished floor with a slightly tapered, dressed and oiled wood strip temporarily secured to the top of the expansion joint filler to form a groove not less than 3/4 inch deep. The wood strip shall be removed after the concrete has set. The groove, when surface dry, shall be cleaned of foreign matter, loose particles, and concrete protrusions, then filled approximately flush with joint sealant so as to be slightly concave after drying. Edges of exposed concrete slabs along expansion joints shall be neatly finished with a slightly rounded edging tool.

5. Concrete shall be placed in an alternating pattern terminating at construction of contraction joints to provide panels of size indicated. Forms shall remain in place for at least 12 hours after concrete placement. Where indicated, isolation joints shall be provided in slabs on grade at columns on separate footing for full slab depth and shall be constructed so that corners of isolation joints will meet at contraction joints.

6. Concrete joints, where sawed or formed, shall be filled with joint sealant except where floor covering is required.

B. Construction Joints Other Than Slabs on Grade: The unit of operation shall not exceed 60' maximum unless prior approval is obtained from Sandia Delegated Representative. Concrete shall be placed continuously so that the unit will be monolithic in construction. Fresh concrete may be placed against adjoining units provided the set concrete is sufficiently hard not to be injured thereby. Joints not indicated shall be made and located to least impair strength and appearance of the structure. Construction joints, if required, shall be located near the midpoint of spans for slabs, beams. Concrete for columns, walls, or piers shall be in place at least 2 hours before concreting beams, or slabs thereon. Beams shall be considered as part of the floor system and shall be placed monolithically therewith. No horizontal joints shall be made in footings. Vertical construction joints in wall footings shall be reduced to a minimum. Placement of concrete shall be at such rate that surfaces of concrete not carried to joint levels will not have attained initial set before additional concrete is placed thereon. Beams and slabs shall be placed in one operation. In walls having door and window openings, individual lifts shall terminate at top and bottom of opening. Other lifts shall terminate at such levels as are indicated or as to conform to structural requirements or architectural details, or both, as directed.

C. Waterstops: Provide waterstops in construction and expansion joints of the configuration and at locations as shown on the drawings. Install waterstops to form a continuous diaphragm in each joint. Make provisions to support and protect waterstops during the progress of the work. Fabricate field joints in waterstops in accordance with manufacturer's printed instructions. Protect waterstop material from damage where it protrudes from any point.

3.05 FINISH OF FORMED SURFACES

A. Rough Form Finish:

1. Provide as-cast rough form finish to formed concrete surfaces that are to be concealed in the finished work or by other construction, unless otherwise indicated.

2. Standard rough form finish shall be the concrete surface having the texture imparted by the form facing material used, with tie holes and defective areas repaired and patched and all fins and other projections exceeding 1/4" in height rubbed down or chipped off.

B. Rubbed Finish:

1. Concrete exposed to view on inside or outside shall receive a rubbed finish.

2. Concrete shall be formed with form facing material which will produce a smooth, hard, uniform texture on the concrete. The arrangement of the facing

material shall be orderly and symmetrical with the number of seams kept to the practical minimum.

3. Immediately upon removal of forms, concrete shall have all fins completely removed and tie holes, stone pockets, and other defective areas patched. Surfaces shall be wetted and rubbed with carborundum brick or other abrasive until uniform color and texture are produced. No cement grout shall be used other than the cement paste drawn from the concrete itself by the rubbing process.

C. Related Unformed Surfaces:

1. At tops of walls, horizontal offsets, and similar unformed surfaces occurring adjacent to formed surfaces, strike off smooth and finish with a texture matching the adjacent formed surfaces. Continue the final surface treatment of formed surfaces uniformly across the adjacent unformed surfaces, unless otherwise shown.

3.06 MONOLITHIC SLAB FINISHES

A. Float Finish:

1. Apply float finish to monolithic slab surfaces that are to receive trowel finish and other finishes as hereinafter specified or shown on drawings or in schedules.

2. After placing concrete slabs, do not work the surface further until ready for floating. Begin floating when the surface water has disappeared or when the concrete has stiffened sufficiently to permit the operation of a power-driven float, or both. Consolidate the surface with power-driven floats or by hand-floating if area is small or inaccessible to power units. Check and level the surface plane to a tolerance not exceeding 1/8" in 10' when tested with a 10' straightedge placed on the surface at not less than two different angles. Cut down high spots and fill all low spots. Uniformly slope surfaces to drains. Immediately after leveling, refloat the surface to a uniform, smooth, granular texture.

B. Trowel Finish:

1. Trowel Finish: Apply trowel finish to monolithic slab surfaces that are to be exposed to view, unless otherwise shown or specified, and slab surfaces that are to be covered with resilient flooring, thin-set tile, paint, or other thin-film finish coating systems. Tops of concrete curbs shall receive steel trowel finish.

2. After floating, begin the first trowel finish operation using a power-driven trowel. Begin final troweling when the surface produces a ringing sound as the trowel is moved over the surface. Consolidate the concrete surface by the final hand troweling operation, free of trowel marks, uniform in texture and appearance.

C. Nonslip Broom Finish:

1. Apply nonslip broom finish to exterior concrete platforms, steps and ramps, and elsewhere as shown on the drawings or in schedules.

2. Immediately after trowel finishing, slightly roughen the concrete surface by brooming in the direction perpendicular to the main traffic route. Use fiber-bristle broom unless otherwise directed. Coordinate the required final finish with Sandia Delegated Representative before application.

D. Chemical-Hardener Finish:

1. Apply chemical-hardener finish to all interior exposed concrete floors on grade. Apply liquid chemical-hardener after complete curing and drying of the concrete surface.

2. Apply proprietary chemical hardeners in accordance with the manufacturer's printed directions.

3. After the final coat of chemical-hardener solution is applied and dried, remove surplus hardener by scrubbing and mopping with water.

3.07 CONCRETE CURING AND PROTECTION

A. General:

1. Protect freshly placed concrete from premature drying and excessive cold or hot temperature for the period of time necessary for hydration of the cement and proper hardening of the concrete.

2. Start initial curing as soon as free moisture has disappeared from the concrete surface after placing and finishing.

3. Begin final curing procedures immediately following initial curing and before the concrete has dried. Continue final curing for at least 7 days and in accordance with ACI procedures except high-early-strength concrete shall be cured for at least three days. Avoid rapid drying at the end of the final curing period.

B. Curing Methods:

1. Perform curing of concrete by moist curing, by moisture-retaining cover curing, by membrane curing, or by combinations thereof, as herein specified.

    a. For curing, use only water that is free of impurities which could etch or discolor exposed, natural concrete surfaces.

    b. Care shall be taken to ensure that no damage is done to fresh concrete during application of curing method. The Contractor shall protect other construction areas from excess water.

2. Provide moist curing by any of the following methods:

    a. Keeping the surface of the concrete continuously wet by covering with water.

    b. Continuous water-fog spray.

    c. Covering the concrete surface with the specified absorptive cover, thoroughly saturating the cover with water, and keeping the absorptive cover continuously wet. Place absorptive cover so as to provide coverage of the concrete surfaces and edges, with a 4" lap over adjacent absorptive covers.

3. Provide moisture-retaining cover curing as follows:

    a. Cover the concrete surfaces with the specified moisture-retaining cover for curing concrete, placed in the widest practicable width with sides and ends lapped at least 3" and sealed by waterproof tape or adhesive. Immediately repair any holes or tears during the curing period using cover material and waterproof tape.

4. Provide liquid membrane curing as follows:

    a. Apply the specified membrane-forming curing compound to damp concrete surfaces as soon as the water film has disappeared. Apply uniformly in a 2-coat continuous operation by power spray-equipment in accordance with the manufacturer's directions. Recoat areas which are subjected to heavy rainfall within 3 hours after initial application. Maintain the continuity of the coating and repair damage to the coat during the entire curing period.

    b. Do not use membrane curing compounds on surfaces which are to be covered with a coating material applied directly to the concrete or with a covering material bonded to the concrete, such as liquid floor hardener, waterproofing, dampproofing, membrane roofing, flooring, painting, and other_coatings and finish materials, unless otherwise acceptable to the

Sandia Delegated Representative. The Contractor shall obtain from the curing compound manufacturer a written guarantee that its compound will not be detrimental to bonding of flooring adhesives or surface materials. This guarantee shall be submitted to Sandia Delegated Representative at the time request is made for use of membrane curing compounds.

c. Do not use curing compounds on surfaces to which additional concrete or cementitious finishing materials are to be applied. Such areas shall be cured by moist curing method.

C. Curing Formed Surfaces:

1. Cure formed concrete surfaces, including the undersides of girders, beams, supported slabs, and other similar surfaces by moist curing with the forms in place for the full curing period or until forms are removed. If forms are removed prior to specified curing period, continue curing by one of the methods specified in "Curing Unformed Surfaces."

2. Moisture loss from surfaces placed against wooden forms or metal forms exposed to heating by the sun shall be minimized by keeping the forms wet until they can be safely removed.

D. Curing Unformed Surfaces:

1. Initially cure unformed surfaces, such as slabs, floor topping, and other flat surfaces by moist curing, whenever possible.

2. Final cure unformed surfaces, unless otherwise indicated, by any of the methods specified above, as applicable.

E. Temperature of Concrete During Curing:

1. When the atmospheric temperature is 40 degrees F. and below, maintain the concrete temperature between 50 and 70 degrees F. continuously throughout the curing period. When necessary, make arrangements before concrete placing for heating, covering, insulating, or housing as required to maintain the specified temperature and moisture conditions, continuously for the concrete curing period. Do not use combustion the first 24 hours of curing without taking precautions to prevent exposure of the concrete to exhaust gases. Provide cold weather protection complying with the requirements of ACI 306.

2. When the atmospheric temperature is 80 degrees F. and above or during other climatic conditions which will cause too rapid drying of the concrete, make arrangements before the start of concrete placing for the installation of windbreaks or shading, and for fog spraying, wet sprinkling, or moisture-retaining covering. Protect the concrete continuously for the concrete curing

period. Provide hot weather protection complying with the requirements of ACI 305.

3. Maintain concrete temperature as uniformly as possible, and protect from rapid atmospheric temperature changes. Avoid temperature changes in concrete which exceed 5 degrees F. in any one hour and 50 degrees F. in any 24 hour period.

F. Protection from Mechanical Injury:

1. During the curing period, protect concrete from damaging mechanical disturbances including load stresses, heavy shock, excessive vibration, and from damage caused by rain or flowing water. Protect all finished concrete surfaces from damage by subsequent construction operations. Do not allow any traffic, except for curing purposes, on the concrete surfaces until the concrete has attained 60% of its 28-day strength.

3.08 CONCRETE SURFACE REPAIRS

A. Patching Defective Areas:

1. Repair and patch defective areas with cement mortar immediately after removal of forms. Use epoxy-based mortar for structural repairs, where directed by Sandia Delegated Representative.
2. Before patching is performed, Sandia Delegated Representative shall be notified and provided sufficient time to observe extent of repairs required.

3. Cut out honeycomb and rock pockets, down to solid concrete but, in no case, to a depth of less than 1". Where defective concrete extends to the depth of reinforcing steel or where reinforcing steel is exposed during concrete chipping, concrete shall be removed to a minimum depth of 3/4 inch clear beyond depth of reinforcing steel. Saw-cut perimeter or area to be patched to provide edges cut perpendicular to the concrete surface.

4. For exposed-to-view surfaces, blend white Portland cement and standard Portland cement so that, when dry, the patching mortar will match the color of the surrounding concrete. Provide test areas at inconspicuous location to verify mixture and color match before proceeding with the patching. Compact mortar in place and strike off slightly higher than the surrounding surface.

5. Fill holes extending through concrete by means of a plunger- type gun or other suitable device from the least exposed face, using a flush stop held at the exposed face to ensure complete filling.

B. Repair of Formed Surfaces:

1. Repair exposed-to-view formed concrete surfaces, where possible, that contain defects which adversely affect the appearance of the finish. Remove and replace the concrete having defective surfaces if the defects cannot be repaired to the satisfaction of Sandia Delegated Representative. Surface defects, as such, include color and texture irregularities, crack, spalls, air bubbles, honeycomb, rock pockets, and holes left by the rods and bolts; fins and other projections on the surface; and stain and other discolorations that cannot be removed by cleaning.

2. Repair concealed formed concrete surfaces, where possible, that contain defects that adversely affect the durability of the concrete. If defects cannot be repaired, remove and replace the concrete having defective surfaces. Surface defects, as such, include cracks in excess of 0.01" wide, cracks of any width through nonreinforced sections, honeycomb, rock pockets, holes left by tie rods and bolts, and spalls except minor breakage at corner.

C. Repair of Unformed Surfaces:

1. Test unformed surfaces, such as monolithic slabs, for smoothness and to verify surface plane to the tolerances specified for each surface and finish. Correct low and high areas as herein specified.

2. Test unformed surfaces sloped to drain for trueness of slope, in addition to smoothness, using a template having the required slope. Correct high and low areas as herein specified.

3. Repair finished unformed surfaces that contain defects which adversely affect the durability of the concrete. Surface defects, as such, include crazing, cracks in excess of 0.01" wide or which penetrate to the reinforcement or completely through nonreinforced sections regardless of width, spalling, popouts, honeycomb, rock pockets, and other objectionable conditions.

4. Correct high areas in unformed surfaces by grinding, after the concrete has cured sufficiently so that repairs can be made without damage to adjacent areas.

5. Correct low areas in unformed surfaces during or immediately after completion of surface finishing operations by cutting out the low areas and replacing with fresh concrete. Finish repaired areas to blend into adjacent concrete.

6. Repair defective areas, except random cracks and single holes not exceeding 1" diameter, by cutting out and replacing with fresh concrete. Remove defective areas to sound concrete with clean, square cuts and expose reinforcing steel with at least 3/4" clearance all around. Dampen all concrete surfaces in contact with patching concrete and brush with a neat cement grout coating, or use concrete bonding agent. Place patching concrete before grout

takes its initial set. Mix patching concrete of the same materials to provide concrete of the same type or class as the original adjacent concrete. Place, compact, and finish as required to blend with adjacent finished concrete. Cure in the same manner as adjacent concrete.

7. Repair isolated random cracks and single holes not over 1" in diameter by the dry-pack method. Groove the top of cracks, and cut out holes to sound concrete and clean of dust, dirt, and loose particles. Dampen all cleaned concrete surfaces and brush with a neat cement grout coating. Place dry-pack before the cement grout takes its initial set. Mix dry-pack consisting of one part Portland cement to 2-1/2 parts fine aggregate passing a No. 16 mesh sieve, using only enough water as required for handling and placing. Compact dry-pack mixture in place and finish to match adjacent concrete. Keep patched areas continuously moist for not less than 72 hours.

8. Repair methods not specified above may be used, subject to the acceptance of Sandia Delegated Representative.

3.09 MISCELLANEOUS CONCRETE ITEMS

A. Steel Pan Stairs: Provide concrete fill for steel pan stair treads and landings and associated items. Cast in safety inserts and accessories as shown on drawings. Screed, tamp, and finish concrete surfaces as scheduled.

B. Filling-In: Fill in holes and openings left in concrete structures for the passage of work by other trades, unless otherwise shown or directed, after the work of other trades is in place. Mix, place, and cure concrete as herein specified, to blend with in-place construction. Provide all other miscellaneous concrete filling shown or required to complete the work.

C. Curbs: Provide monolithic finish to interior curbs by stripping forms while concrete is sill green and steel-troweling surfaces to a hard, dense finish with corners, intersections, and terminations slightly rounded.

D. Equipment Bases and Foundations: Provide machine and equipment bases and foundations, as shown on the drawings. Set anchor bolts for machines and equipment to template at correct elevations, complying with certified diagrams or templates of the manufacturer furnishing the machines and equipment.

3.10 FIELD QUALITY CONTROL AND TESTING

A. Comply with requirements of Specification Section 01411 for the field testing of concrete as herein specified.

B. Concrete shall meet or exceed the properties for concrete as defined in the mix design criteria and as herein specified. Failure of the concrete to meet any of these requirements shall be considered grounds for rejection of the concrete or the portion of the work performed with it.

C. Formed Concrete Dimensional Tolerances:

1. Formed concrete having any dimension smaller than required, and outside the specified tolerance limits, will be considered deficient in strength and will be rejected if the appearance or function of the structure is adversely affected.

2. Formed concrete having any dimension greater than required will be rejected if the appearance or function of the structure is adversely affected, or if the larger dimensions interfere with other construction. Repair or remove and replace rejected concrete as required to meet the construction conditions. When permitted, accomplish the removal of excessive material in a manner to maintain the strength of the section without affecting function and appearance.

D. Strength of Concrete Structures:

1. The strength of the concrete structure in-place will be considered potentially deficient if it fails to comply with any of the requirements which control the strength of structure, including the following conditions:

a. Failure to meet compressive strength test requirements.

b. Concrete which differs from the required dimensions or location in such a manner to reduce strength.

c. Concrete subjected to damaging mechanical disturbances particularly load stresses, heavy shock, and excessive vibration.

d. Poor workmanship and quality control likely to result in deficient strength.

3.11 SPECIFIC TESTS, INSPECTIONS AND METHODS REQUIRED FOR LABORATORY TESTING - CAST-IN-PLACE CONCRETE

A. Tests for Concrete Materials:

1. For normal weight concrete, test aggregates by method of sampling and testing of ASTM C33.

2. For Portland cement, submit certificate of material's properties and compliance with requirements of ASTM C150.

3. Submit written reports to Sandia Delegated Representative for each material sampled and tested, prior to start of work. Provide the project identification

name and number, date of report, name of Contractor, name of concrete testing service, source of concrete aggregates, material's manufacturer and brand name for manufactured materials, values specified in the referenced specification for each material, and test results. Indicate whether or not material is acceptable for intended use.

4. Certificates of material's properties and compliance with specified requirements may be submitted in lieu of testing, when acceptable to Sandia Delegated Representative. Certificates of compliance must be signed by the materials producer and the Contractor.

3.12 SPECIFIC TEST, INSPECTIONS AND METHODS REQUIRED FOR FIELD TESTING CAST-IN-PLACE CONCRETE

A. The testing laboratory shall take samples and conduct tests to evaluate concrete. Failure to detect defective work or materials will not, in any way, prevent rejection later when such defects are discovered, nor will it be construed as obligating the Sandia National Laboratories to make final acceptance. Sampling and testing for field quality control during the placement of concrete shall be as follows:

1. Sampling Fresh Concrete: ASTM C172, except modified for slump to comply with ASTM C94.

2. Slump: ASTM C143; one test for each set of compressive strength test and whenever the indication of change requires.

3. Air Content: For normal weight concrete ASTM C231, pressure method; for lightweight concrete ASTM C173, volumetric method; one for every strength test and whenever the indication of change requires.

4. Compression Test Specimens: ASTM C31; one set of 6 standard cylinders for each compressive strength test, unless otherwise directed.

   a. Cast and store cylinders for laboratory-cured test specimens and field-cured test specimens as specified in ASTM C31.

   b. Four cylinders shall be delivered to the laboratory about 24 hours after being molded and shall be moist-cured under laboratory conditions.

   c. The other two cylinders shall be kept on or near the work and shall receive the same protection from the elements and the same curing treatment as is given that portion of the work from which the sample was taken. Footing cylinders shall be treated as if taken from the superstructure.

5. Concrete Temperature: Test hourly when air temperature is 40 degrees F. and below, and when 80 degrees F. and above, and each time a set of compression test specimens is made.

6. Compressive Strength Tests: Make at least one compressive strength test in accordance with ASTM C39 for each 100 cu. yds. or fraction thereof, of each mix design placed in any one day or for each 5000 sq. ft. of surface area placed or as directed. Each test will consist of six specimens. Two specimens shall be tested in seven days for information, three specimens shall be tested at 28 days for strength evaluation and one specimen shall be retained in reserve for later testing if required.

    a. When the total quantity of a given mix design of concrete is less than 50 cu. yds., the strength tests may be waived by Sandia Delegated Representative if, in his judgment, adequate evidence of satisfactory strength is provided.

    b. When the strength of field-cured cylinders is less than 85% of companion laboratory-cured cylinders, evaluate current operations and provide corrective procedures for protecting and curing the in-place concrete.

7. Reports of compressive strength tests shall contain the project identification name and number, date of concrete placement, name of Contractor, name of concrete supplier and truck number, name of concrete testing service, concrete type and class, location of concrete batch in the structure, design compressive strength at 28 days, concrete mix proportions and materials; compressive breaking strength and type of break for both 7-day tests and 28-day tests, slump and air content.

3.13 ADDITIONAL TESTS - CAST-IN-PLACE CONCRETE

A. The testing service will make additional tests of in-place concrete when test results indicate the specified concrete strengths and other characteristics have not been attained in the structure, as directed by the Sandia Delegated Representative. The testing service shall conduct tests to determine the strength and other characteristics of the in-place concrete by compression tests on cored cylinders complying with ASTM C42, or by load testing specified in ACI 318, or other acceptable nondestructive testing methods, as directed. The Contractor shall pay for such tests conducted, and any other additional testing as may be required, when unacceptable concrete is verified to exist.

3.14 EVALUATION OF QUALITY CONTROL TESTS - CAST-IN-PLACE CONCRETE

A. Do not use concrete delivered to the final point of placement which has slump or total air content outside the specified values.

B. The strength level of the concrete will be considered satisfactory if the averages of all sets of three consecutive 28-day compressive strength test results equal or exceed the specified compressive strength of the type or class of concrete and no individual strength test result falls below the specified compressive strength by no more than 500 psi. In all cases where the average strength of the laboratory control cylinders shown by these tests for any portion of the structure falls below the minimum ultimate compressive strengths, Sandia Delegated Representative shall have the right to order a change in mix or in water content for the remaining portion of the structure.

C. Strength tests of specimens cured under field conditions shall be required by Sandia Delegated Representative to check the adequacy of curing and protecting of the concrete placed. Specimens shall be molded by the field quality control laboratory at the same time and from the same samples as the laboratory cured specimens.

    1. Provide improved means and procedures for protecting concrete when the 28-day compressive strength of field-cured cylinders is less than 85% of companion laboratory-cured cylinders.

    2. When laboratory-cured cylinder strengths are appreciably higher than the minimum required compressive strength, field-cured cylinder strengths need not exceed the minimum required compressive strength by more than 500 psi even though the 85% criterion is not met.

D. If individual tests of laboratory-cured specimens produce strengths more than 500 psi below the required minimum compressive strength, or if tests of field-cured cylinders indicate deficiencies in protection and curing, provide additional measures to assure that the load-bearing capacity of the structure is not jeopardized. If the likelihood of low-strength concrete is confirmed and computations indicate the load-bearing capacity may have been significantly reduced, tests of cores drilled from the area in question may be required.

E. If the compressive strength tests fail to meet the minimum requirements specified, the concrete represented by such tests will be considered deficient in strength and subject to additional testing as herein specified.

END OF SECTION

SECTION 03353

ARCHITECTURAL CONCRETE

PART 1 - GENERAL

1.01 RELATED DOCUMENTS

Drawings and general provisions of Contract, including General and Supplementary Conditions and Division-1 Specification Sections, apply to work of this section as if repeated herein.

1.02 DESCRIPTION

A. Work under this section consists of furnishing all equipment, labor, materials and services necessary for complete installation of architectural concrete in accordance with specifications and applicable drawings.

B. Architectural concrete shall, except as otherwise specified herein, meet the requirements of Specification Section 03300, Cast-in-Place Concrete.

C. Work shall include cast-in-place concrete noted on the drawings and schedules as "architectural concrete".

D. Architectural concrete shall have the finish equal to the sample to be approved on the Contractor's mock-up. It shall be formed, placed and finished as hereinafter specified and as required to provide even, dense surfaces of uniform color and texture. The Contractor shall remove defective work, which does not meet the requirements of the drawings and specifications at no additional cost to the Sandia.

1.03 CONCRETE TESTING AGENCY

A. The testing agency, in addition to the services specified in Specification Section 01400 shall provide the following:

1. Furnish copies of the following ASTM tests to the SDR prior to initiating mix design of architectural concrete:

a. Sieve analysis of fine and coarse aggregates - ASTM C-136.

b. Dry rodded weight of coarse aggregate - ASTM C-29.

c. Specific gravity (S.S.D.) of fine and coarse aggregates - ASTM 127 and ASTM 128.

2. Test coarse aggregate for dry rodded unit weight whenever a sieve analysis is made, and when it appears that there has been a change in the characteristics of the aggregate - ASTM C-29.

3. Slump test - ASTM C-143, shall be taken as often as required to provide the specified consistent concrete.

4. Furnish an experienced and qualified independent concrete field representative to daily check the concrete materials and inspect concrete at jobsite during placing of architectural concrete. The field representative shall be subject to approval by the Sandia Delegated Representative. Field concrete tests shall be accomplished by this field representative.

5. The field representative shall check trucks used to transport architectural concrete to assure that they comply with these specifications and are clean and in condition to mix and deliver a uniform mix at low slump.

6. The field representative shall periodically check aggregate stockpiles and storage bins and bring to the attention of the concrete producer and to the SDR any practices which are potentially causing contamination.

7. The field representative shall examine trucks upon arrival to insure that the mix delivered is architectural concrete. Job delivery tickets shall be stamped "architectural concrete," and the mix ingredients and their batched weights shall be displayed on the ticket.

8. The field representative will be aware of the available procedures for adding water to the concrete on-site.

1.04 PRECONSTRUCTION CONFERENCE

A. Following award of the contract, the Contractor shall schedule a Preconstruction Conference, at a mutually agreeable time, to include the Sandia Delegated Representative, Testing Lab, Concrete Producer, and form manufacturer to discuss the architectural concrete system. Two weeks prior to this conference the Contractor shall submit to the Sandia Delegated Representative for evaluation, all pertinent information, brochure and samples of proposed related equipment and materials, including mock-up shop drawings. The following items shall be included for detailed discussion:

1. Forming materials - Including form liner.

2. Forming systems or methods - A description or drawings indicating the various types of forming systems proposed. Shop drawings shall be submitted for review prior to fabrication of forming system.

3. Form tie system - Proposed leakage prevention method shall be described. Form caulking materials shall be presented for review.

4. Special form configuration details and materials, where applicable Rustication strips, drip strips, chamfer strips, sealing and attachment techniques.

5. Form release agent - Product and application technique.

6. Concrete placement and consolidation equipment and procedures - Buckets, hoppers or tremies, vibrators.

7. Form stripping schedule.

8. Concrete curing system.
9. Concrete patching system.

1.05 SAMPLES

Construct and deliver to the Sandia Delegated Representative 1'-0" x 1'-0" vertically cast architectural concrete samples with specified finish as required to allow the selection of concrete finish. Samples shall be approved prior to casting mock-up. Form cast, texture, color and seal samples as specified for architectural concrete.

1.06 PROJECT MOCK-UPS

A. The Contractor shall construct a mock-up at location on the site designated by the Sandia Delegated Representative. Only materials, forming systems, design mix, reinforcing details, leakage prevention techniques, and construction methods approved on submittal and at the Preconstruction Conference shall be utilized. Mock-up drawings submittal shall be completed prior to the Preconstruction Conference and may be used for approval of typical forming procedures.

1. Mock-up shall be 4' x 8' and contain typical vertical and horizontal joints as detailed for the wall and corner joints, ties, reinforcing and finishing. Mock-up must be completed and approved thirty (30) days prior to casting of architectural concrete.

2. Finish mock-up as specified for architectural concrete and as submitted on approved samples.

3. The mock-up shall represent the execution and finish required by this specification and shall be used as a quality standard for all architectural concrete. If first mock-up is not acceptable, the Contractor shall construct

additional mock-ups, at no additional cost to Sandia, until an acceptable mock-up has been constructed. The mock-up panel will be approved by the Sandia Delegated Representative.

4. The mock-up shall serve as a testing specimen for remedial patch work prior to execution on the building.

5. The Contractor shall protect and maintain the approved mock-up in place until removal is directed. The mock-up shall be dismantled when directed by the Sandia Delegated Representative without additional cost to the contract.

PART 2 - PRODUCTS

2.01 MATERIALS

A. General: Concrete materials shall be loaded, transported, handled, stored and batched by the concrete producer and his suppliers in a manner that will insure that materials are not contaminated, unclean, segregated or affected in any way that will damage the end finish or quality of the concrete.

B. Cement: As specified in Specification Section 03300 from a single source.

C. Aggregates for concrete shall meet the requirements of ASTM C-33 for gradation and quality except as modified herein.

1. Coarse aggregate shall be 1/2" to #4, Grading Number 7, clean washed gravel or crushed limestone.

2. Fine aggregate shall be a clean washed river sand.

D. Admixtures:

1. The concrete producer shall insure compliance with the manufacturer's recommendations for the method of dispensing the admixtures with particular attention to possible undesirable chemical reaction between products when mixed in concentrated form. The following listed admixtures shall be used in all architectural concrete:

a. Water-reducing or retarding (ASTM C-494, Type A, Type D) as required: The manufacturer of the admixture shall be consulted on the effects of increased dosage rates, above the manufacturer's recommended minimum. The common water-reducing and/or set-retarding admixture available at the concrete supplier may be submitted for approval. A benefit expected of the admixture shall be to aid in maintaining uniform slump and workability between lifts. Bleeding admixtures such as metallic salts of hydrolylated carboxylic acid shall not be used. Above an ambient

temperature of 75F., increased retarding dosage rates shall be considered for slump control.

b. Air Entraining (ASTM C-260): The manufacturer of the admixture shall submit in writing to the SDR special recommendations for quantities to insure 6% plus or minus 1% air by volume.

c. Calcium chloride or other accelerating admixtures containing calcium chloride shall not be used.

d. Fly Ash shall not be used in architectural concrete.

e. Coloring Pigments: Natural and synthetic mineral oxide pigments that do not contain fillers or artificial adulterants, complying with ASTM C979-82. Provide Davis Colors number 5237, San Diego Buff or approved equal. The concrete shall contain 1-1/2 pounds of colorant per sack of gray cement. Pigments packaged in bulk shall be accurately field-weighed to the correct dosage per cubic yard of concrete.

E. Reinforcing Steel:

1. Reinforcing steel shall be provided in accordance with Section 03200, Concrete Reinforcement. Placement of reinforcing bars shall provide sufficient clearances to allow the unobstructed placement of architectural concrete.

2. The thickness of concrete cover over reinforcing steel and electrical conduit shall not be less than 1-1/2" at all architectural concrete finished surfaces. The Contractor shall verify and position reinforcing steel, conduits, and chases to allow for sufficient casting and consolidation space. Horizontal bars shall not be located behind horizontal rustications due to the inadequate concrete cover available.

F. Formwork:

1. Formwork shall be provided in accordance with Section 03100, Concrete Formwork

2. Formliner: Burke number T2040, or approved equal.

G. Curing: Concrete shall be cured using a matching color seal by the pigment manufacturer.

2.02 CONCRETE MIX DESIGN AND TESTING

A. Architectural concrete mixes shall be designed by the contractor to achieve the strength requirements and the architectural concrete finish requirements, including the minimization of blowholes and segregation. The mixes shall be proved on the mock-up.

B. Comply with the applicable requirements of Section 01400, Testing Laboratory Services for the properties, mix design, testing and types of concrete as herein specified.

C. Standard weight concrete consisting of the specified Portland cement, aggregates, admixtures and water to produce the following strengths:

1. Compressive Strength: 4000 psi minimum at 28 days.

2. Cement factor shall not be less than six bags per cubic yard, and once used in the project shall not be varied.

PART 3 - EXECUTION

3.01 BATCHING AND MIXING

A. Batching sequence shall be reviewed by the test laboratory field representative.

B. Mixing time shall start after all ingredients are in the mixer exclusive of extra water. If highly porous, coarse aggregate is to be used, supply shall be continuously soaked by hoses up to 24 hours prior to batching. This potential requirement shall be reviewed at the Pre-construction Conference.

C. Ready mix concrete shall be prepared, mixed, and delivered according to the requirements of ASTM C-94. Proportions shall be by weight and shall be uniformly and accurately controlled.

D. Truck mixer drums and loading hoppers are to be thoroughly clean for batching architectural concrete. Truck mixer shall be loaded at only the capacity which will insure a uniform batch at the slump specified. In the event that mixing in the truck mixer is not uniform, the truck may either be rejected and not used on the project, or if warranted, allowed to mix only batches which will insure delivery of a uniform concrete of the specified slump. Mixer shall conform to mixer standards of Mixer Manufacturers' Bureau and shall be equipped with revolution counter.

1. Minimum mixing shall be 80 revolutions at high mixing speed if charged to maximum capacity, and 50 revolutions at mixing speed if charged to less than maximum capacity.

2. Driver shall not add water to the mix except as directed by the testing lab representative, or Contractor's designated representatives as approved in writing by the Sandia Delegated Representative.

3. Concrete delivery shall be scheduled to assure prompt discharge upon truck arrival to site. Trip tickets shall be stamped "Architectural Concrete" and the mix proportions indicated on the tickets.

4. If additional water is required to maintain the concrete at the specified slump and is approved to do so by the above properly designated persons, then water shall be added to the concrete only in amounts equal to one gallon per cubic yard of concrete remaining in the trucks. This requirement may be modified if proven first on the mock-up. The drum then shall be rapidly rotated a minimum of 30 revolutions or until the concrete is observed to flow over the blades without the characteristic breaking and falling away from the blades of material with improper workability. The process shall be repeated until proper workability returns.

5. The architectural concrete mix normally contains a higher percentage of coarse aggregate by volume than ordinary structural concrete. To insure that the slow turning of drums between discharge does not cause segregation of some coarse aggregate out of the concrete mass the driver should rotate the drum rapidly for a minimum of 10 revolutions to remix to a uniform mass prior to any discharge after a delay. This procedure is suggested after transit rotation, upon arrival for initial discharge.

3.02 PLACING

A. Before placing concrete, preliminary work such as forms and reinforcing steel shall be checked carefully. Debris and water shall be removed from inside of the forms. The concrete shall be handled from the mixer to the place of final deposit as rapidly as practical by methods which shall prevent separation or loss of ingredients. Concrete shall be discharged by means equal to steep-sided bottom drop buckets and not allowed a free fall of over 6 feet. The use of tremies shall be required for long free falls. Buckets shall have a capacity of not less than one cubic yard. Transporting and handling equipment shall be cleaned at frequent intervals and flushed thoroughly with water before and after each day's run. The water shall not be discharged into forms for concrete.

B. No placing shall be permitted when the sun, temperature, wind or limitations of facilities furnished by the Contractor prevent proper finishing and curing.

C. Concrete shall be deposited directly as near final position as possible to avoid rehandling. It shall be placed in uniform, horizontal layers, care being taken to avoid vertical joints or inclined planes. The piling up of concrete in forms in one location in such a manner as to permit the escape of mortar or the lateral flow of

the concrete itself, will not be permitted. Concrete shall be deposited continuously as rapidly as practical until the entire unit of pour is completed, with thorough consolidation by vibrating to insure a dense, homogeneous mass without voids. Lifts shall be placed at no greater than 30 minute intervals, and the size of concrete pour to be attempted shall be planned accordingly.

D. Concrete shall not be spaded at surfaces to receive finish. A crew member shall be available with a water hose during concrete placement that may cause spillage on previously placed architectural concrete. Mortar spillage shall be removed before it hardens.

3.03 CONSOLIDATION

A. Proper placement and thoroughly effective consolidation of architectural concrete are most important. Vibrators shall be placed in concrete rapidly so as to penetrate into the previous lift to blend the two lifts and minimize or eliminate entrapped air between the concrete and the form. Rate of withdrawal is not to exceed one inch per second so long as the vibrator is fully submerged.

B. The vibrator head shall not be allowed to come within 3" of the form face, or be operated only partially submerged in the top of the concrete mass. Vibrators shall be used with a steady, continuous motion in the concrete mass and with the recommended duration at each position in an approved pattern of not more than 20" on center to permit the maximum escape of entrapped air from the concrete.

C. Vibrators for architectural concrete may be of the two general types as follows:

1. Motor-In-Head Type equal to:

DART - DHC 100
HOMELITE - VCH 250-1

(These are 180 cycle, minimum 10,000 vibrations per minute, and require 180 cycle generators with a spare generator being available in case of breakdown.)

2. Motor-On-Shaft Type: A minimum 2-horsepower motor shall be used to drive minimum 2-1/4" diameter head size with minimum frequency of 10,000 vibrations per minute. This type of vibrator develops the rated frequency without long shaft extensions. If the project requires a vibrator shaft length over 15', the manufacturer shall be consulted for the effect on rated frequency.

D. Two vibrators shall be used with a spare immediately available in case of breakdown. Vibrators used on the project shall be of the internal stinger type unless approved by the Sandia Delegated Representative.

E. Smaller diameter, shorter length, low horsepower vibrators may be necessary for specific uses, such as topping out pours, and shall be available as required.

3.4 CURING

A. No curing techniques shall be allowed which affect the color of the concrete surface or detract from the effectiveness of the concrete surface sealer which may be specified. No curing compound shall be used on vertical surfaces of architectural concrete after form removal if the concrete surface is to be later treated with a sealer.

3.05 PATCHING

A. Upon stripping the formwork, if leakage or misalignment is observed in the concrete, corrective action shall be initiated. An electric grinder, handstone or other alignment tool shall be used. Patching mix shall be applied only after alignment and finishing.

B. Areas to be patched shall be approved by the Sandia Delegated Representative, and shall not exceed two square feet for each 1,000 square feet of surface area and shall be widely dispersed. Patches shall be indistinguishable from the surrounding area. After curing, the patch shall be cleaned before sealing.

C. Before commencing patching, the Contractor shall confirm patching procedures with the Sandia Delegated Representative and establish by trial mix, the formula for the patching of the finish. The Contractor shall demonstrate his patching technique on the mock-up.

D. The Contractor shall insure that proper curing and finishing of patchwork is executed according to the approved procedures. Patching shall not commence if the expected ambient temperature is to be below 40 F. No patching shall be allowed when wind or rain can interfere with the proper curing of the patch.

3.06 CLEANING AND SEALING

A. Before sealing, the surfaces shall be inspected and cleaned. Laitance and efflorescence shall be removed where applicable. If cleaner is necessary, the concrete surface shall be wet before application. The cleaner shall not contain muriatic acid, and shall be diluted according to manufacturer's instructions. The cleaner shall be Sure-Klean #600 by ProSoCo of Kansas City or Quick-Klean by L & M Construction Chemicals, Omaha. Within 5 minutes of application, the surface shall be thoroughly flushed with clean water.

B. The sealer shall be approved by the color pigment manufacturer in writing. Prior to application, the Contractor shall submit to the Sandia Delegated Representative in writing the number of square feet to be sealed, with a letter from the sealer

manufacturer stating the rate of coverage and the amount of product purchased for application.

1. Sealer shall be applied in two coats using an airless sprayer under low pressure.

C. The sealer shall be applied within one month of finishing the surface, after patching, cleaning, and color sealing. After these sealer applications are dry, clean water shall be splashed on these surfaces. If the water does not bead, but is absorbed, the surface shall be resealed.

D. No surfaces which are to receive joint sealants shall have sealer applied in advance of sealant application. This specification may be waived if the concrete is cleaned and primed according to the techniques of the sealant manufacturer.

3.07 FIELD QUALITY CONTROL AND TESTING

A. Comply with requirements of Section 01400 for the field testing of concrete as herein specified.

B. Concrete shall meet or exceed the properties for concrete as defined in the mix design criteria and as herein specified. Failure of the concrete to meet any of these requirements shall be considered grounds for rejection of the concrete or the portion of the work performed with it.

END OF SECTION

SECTION 03450

ARCHITECTURAL PRECAST-PRESTRESSED CONCRETE

PART 1 - GENERAL

1.01 Related Documents

Drawings and general provisions of Contract, including General and Supplementary Conditions and Division-1 Specification sections, apply to work of this section as if repeated herein.

1.02 DESCRIPTION

A. Architectural precast-prestressed concrete fence wall includes the following:

1. Special formed and textured units at corporation yardwall.

1.03 QUALITY ASSURANCE

A. Codes and Standards:

1. Comply with the provisions of the following codes, specifications, or standards except where more stringent requirements are shown or specified:

a. ACI 318 - Building Code Requirements for Reinforced Concrete

b. ACI 533 - Precast Concrete Wall Panels

c. AWS D 1.0 - Code for Welding in Building Construction

d. AWS D 12.1 - Recommended Practices for Welding Reinforcing Steel, Metal Inserts and Connections in Reinforced Construction

e. PCI MNL 117 - Manual for Quality Control for Plants and Production of Architectural Precast Concrete Products.

B. Fabricator Qualifications: Firms shall have a minimum of 3 years successful experience in the fabrication of architectural precast concrete units, similar to units required for this project. Fabricator must have sufficient production capacity to produce, transport, and deliver required units without causing delay in the work.

1. If units are produced at locations other than precast concrete fabricating plants, maintain procedures and conditions for quality control equivalent to plant production.

C. Erector Qualifications:

1. Firm shall have a minimum of 3 years successful experience in the erection of architectural precast units, similar to units required for this project.

D. Qualifications for Welding Work:

1. Qualify welding processes and welding operators in accordance with AWS "Standard Qualification Procedures."

2. Provide certification that welders to be employed in the work have satisfactorily passed AWS qualification tests within the previous twelve months. Submit certification a minimum of fifteen (15) days prior to performing any welding.

3. If recertification of welding is required, retesting will be the Contractor's responsibility.

1.04 SUBMITTALS

A. Submit manufacturer's specifications, data and instructions for manufactured materials and products. Include manufacturer's certifications and laboratory test reports as required including mix designs.

B. Submit calculations stamped by a Registered Engineer in the State of California and shop drawings showing complete information for fabrication and installation of prestressed-precast concrete units. Indicate member dimensions and cross-section; location, size and type of reinforcement, including special reinforcement and lifting devices necessary for handling and erection.

1. Include erection procedure for precast units, sequence of erection, and required handling equipment.

2. Show layout, dimensions, and identification of each precast unit corresponding to sequence and procedure of installation. Indicate welded connections by AWS standard symbols. Detail inserts, connections, and joints, including accessories and construction at openings in precast units.

3. Show location and details of anchorage devices that are to be embedded in other construction.

4. Corrections or comments made on the shop drawings during the Sandia Delegated Representative's review do not relieve the Contractor from compliance with requirements of the drawings and specifications. The review of shop drawings is only for general conformance with the design concept of the project and general compliance with the information given in the contract documents. The Contractor is responsible for confirming and correlating quantities and dimensions; coordinating his work with that of other trades; and performing his work in a safe and satisfactory manner.

5. In general, the drawings are made to scale, but scale measurements shall not be used in locating or arranging the members. The Contractor shall check the contract drawings before proceeding with detailing and report errors or inconsistencies discovered therein to the Sandia Delegated Representative before starting detailing.

6. Revisions shown on the shop drawings shall be considered as changes necessary to meet specified requirements and shall not be taken as the basis of claim for extra work.

C. Submit 3 sets of precast samples approximately 24" x 24" x 5" to illustrate quality, color, and texture of surface finish.

D. Prepare full-size sample of each required architectural precast concrete unit for Sandia's Delegated Representative's review at production plant or on site prior to start of installation work, and after review of finish samples. Acceptable full-size samples may be incorporated in job installation.

E. Design modifications may be made only as necessary to meet field conditions and to ensure proper fitting of the work, and only as acceptable to Sandia's Delegated Representative. Maintain general design concept shown without increasing or decreasing sizes of members or altering profiles and alignment shown. Provide completed design calculations and drawings prepared by a registered professional engineer if design modifications are anticipated. All calculations and drawings for revisions shall be stamped by a registered professional engineer in California.

1.05 PRODUCT HANDLING

A. Store units at project site to prevent cracking, distortion, warping, staining, or other physical damage. Lift and support units only at designated lifting or supporting points as shown on final shop drawings.

PART 2 - PRODUCTS

2.01 REINFORCING MATERIALS

A. Reinforcing Bars: ASTM A 615, Grade 60.

B. Prestressing Tendons: Uncoated 7-wire stress-relived strand: ASTM A 416, Grade 270.

C. Structural shapes: ASTM A36.

D. Headed stud shear connectors shall be automatic welded type conforming to ASTM A-108, Grade 1015, cold finished carbon steel, with dimensions complying and with AISC specifications.

E. Welded Deformed Steel Wire Fabric: ASTM A 497.

F. Supports for Reinforcement: Provide supports for reinforcement including bolsters, chairs, spacers and other devices for spacing, supporting and fastening reinforcing.

1. For exposed-to-view concrete surfaces, where legs of supports are in contact with forms, provide supports with legs which are hot-dip galvanized, plastic protected or stainless steel protected.

2.02 CONCRETE MATERIALS

A. Portland Cement: ASTM C 150, Type II.

B. Aggregate: As specified in Specification Section 03353.

C. Admixtures: As specified in Specification Section 03353.

D. Formwork: As specified in Specification Section 03353.

E. Anchors and Inserts:

1. Provide inserts, dowels, bolts, nuts, washers and other items shown to be case in panels or required for connecting panels to adjacent work, including inserts required for pickup.

2. All items cast into panels including iron and steel anchors and inserts and connecting devices shall be hot-dipped galvanized in accordance with ASTM A 153.

F. Water: Potable or free from foreign materials in amounts harmful to concrete and embedded steel.

2.03 MIX DESIGN

A. Comply with requirements of Specification Section 03353, Architectural Concrete unless specified herein.

2.04 FABRICATION

A. General: Fabricate precast concrete units complying with manufacturing and testing procedures, quality control recommendations, and dimensional tolerances of PCI MNL-117, unless otherwise indicated.

1. Casting Tolerances - Overall height and width measured at the face adjacent to the mold when cast:

a. 10 ft. or under, plus or minus 1/8 in.

b. 10 ft. or 20 ft., plus 1/8 in. and minus 3/16 in.

c. 20 ft. or 30 ft., plus 1/8 in. and minus 1/4 in.

d. Each additional 10 ft. plus or minus 1/16 in. per 10 ft.

e. Angular deviation of plane of side mold, 1/16 in. per 6 in. depth, but at least 1/16 in.

f. Thickness, plus 1/4 in., minus 1/8 in.

g. Openings (cast within one member) plus or minus 1/4 in.

h. Out of square (difference in length of the two diagonals measurements) 1/8 in. per 6 ft. or 1/4 in. total, whichever is greater.

2. Position of Cast-in Items:

a. Inserts, bolts, pipe sleeves, etc., plus or minus 3/8 in.

b. Electrical outlets, hose bibs, etc., plus or minus 1/2 in.

3. After Casting Tolerances - Bowing and Warpage:

a. Without intermediate support, 1/360 panel dimension.

B. Fabricate units straight, smooth, and true to size and shape, with exposed edges and corners precise and square unless otherwise indicated.

1. Precast units which are warped, cracked, broken, spalled, stained, or otherwise defective will not be acceptable.

2.05 CASTING PANELS

A. Coordinate installation of inserts and anchorages required to be set into other work prior to casting panels

B. Accurately secure in place all reinforcing steel, inserts, bolts, plates and sleeves to be built into the work. Extend reinforcing as required for later connections to other concrete structures.

C. Vibrate concrete thoroughly to produce maximum density throughout entire panel thickness without voids. Take care not to displace reinforcement or inserts, or to score form liners.

2.06 FINISH

A. Finish exterior as specified in Specification Section 03353, Architectural Concrete.

B. Interior surfaces exposed to view shall be given a broom finish.

PART 3 - EXECUTION

3.01 INSTALLATION

A. General: Deliver anchorage items which are to be embedded in other construction before start of such work. Provide setting diagrams, templates, instructions and directions as required for installation.

B. Install precast concrete members plumb, level, and in alignment within PCI MNL-17 specified limits of erection tolerances. Provide temporary supports and bracing as required to maintain position, stability and alignment as members are being permanently connected.

1. Erection Tolerance:

a. Face width of joint.

(1) Panel dimension (normal to joint) 10 ft. or under, plus or minus 3/16 in.

(2) Panel dimension (normal to joint) 10 ft. to 20 ft., plus 3/16 in. and minus 1/4 in.

(3) Each additional 10 ft. (normal to joint), plus or minus 1/16 in.

b. Joint taper (panel edges not parallel), 1/40 in. per ft. length or 1/16 in. total, whichever is larger, but not greater than 3/8 in.

c. Panel Alignment:

(1) Jog in alignment of edge, 1/4 in.

(2) Offset in face of panel (exterior face unless otherwise noted), 1/4 in.

d. Location of openings in wall panels, plus or minus 1/4 in.

C. Anchor units in final position by bolting, welding, grouting, or as otherwise indicated. Remove temporary shims, wedges, and spacers as soon as possible after anchoring is completed.

1. At bolted connections use lock washers or other acceptable means to prevent loosening of nuts.

2. At welded connections apply rust-inhibitive coating on damaged areas, same as shop-applied material. Use galvanizing repair coating on galvanized surfaces.

3.02 CLEANING AND SEALING

A. Before sealing, the surfaces shall be inspected and cleaned. Laitance and efflorescence shall be removed where applicable. If cleaner is necessary, the concrete surface shall be wet before application. The cleaner shall not contain muriatic acid, and shall be diluted according to manufacturer's instruction. The cleaner shall be Sure-Klean #600 by ProSoCo of Kansas City or Quick-Klean by L & M Construction Chemicals, Omaha. Within 5 minutes of application, the surface shall be thoroughly flushed with clean water.

B. No surfaces which are to receive joint sealants shall have water repellent applied in advance of sealant application. This specification may be waived if the concrete is cleaned and primed according to the techniques of the sealant manufacturer.

3.03 PERFORMANCE REQUIREMENTS

A. Damage to precast units, whether before or after installation, shall be repaired by precaster.

B. Limitations as to the amount of patching which will be permitted are subject to acceptance of Sandia's Delegated Representative. Sandia's Delegated Representative will be the sole judge as to the aesthetic acceptability of patches and surfaces which develop surface finish deficiencies.

C. In addition to above, in-place precast units may be rejected for any one of the following:

1. Exceeding the specified installation tolerances.

2. Damaged during construction operations.

3. Other defects as listed in PCI MNL-117.

END OF SECTION

SECTION 05100

STRUCTURAL METAL FRAMING

PART 1 - GENERAL

1.1 RELATED DOCUMENTS

A. Drawings and general provisions of Contract, including General and Supplementary Conditions and Division-1 Specification Sections, apply to work of this section.

1.02 DESCRIPTION

A. Work under this section consists of furnishing labor, materials, equipment and services necessary for the fabrication, delivery and erection of structural steel, as shown on drawings and specified herein.

B. Structural steel is that work defined in AISC "Code of Standard Practice" and as otherwise shown on drawings.

1.03 QUALITY ASSURANCE

A. Applicable Standards: Conform to the current edition of the following standards:

1. AISC: Specifications for the Design, Fabrication and Erection of Structural Steel for Buildings

2. AISC: Code of Standard Practice for Steel Buildings and Bridges.

3. AISC: Structural Steel Detailing

4. AWS D1.1: Structural Welding Code

5. ASTM A36: Specification for Structural Steel

6. ASTM A307: Specification for Carbon Steel Externally and Internally Threaded Standard Fasteners

7. ASTM A325: Specification for High-Strength Bolts for Structural Steel Joints including Suitable Nuts and Plain Hardened Washers

8. ASTM 500: Specification for Cold-Formed Welded and Seamless Carbon Steel Structural Tubing in Rounds and Shapes

9. ASTM A501: Specification for Hot-Formed Welded and Seamless Carbon Structural Tubing

10. SSPC: Steel Structures Painting Council Systems and Specifications

11. Research Council on Riveted and Bolted Structural Joints of the Engineering Foundation: Specifications for Structural Joints Using ASTM A325 or A490 Bolts

B. Source Quality Control:

1. General: The materials and fabrication procedures to be furnished under this specification shall be subject to inspection in the mill, shop and field by a qualified inspection agency. Inspection will be conducted without expense to the Contractor; however, inspection in the mill, shop or field shall not relieve the Contractor of his responsibility to furnish materials and fabrication procedures in accordance with specified requirements. Promptly remove and replace materials or fabricated components which do not comply with drawings or specifications.

C. Qualifications for Welding Work:

1. Qualify welding processes and welding operators in accordance with the AWS "Standard Qualification Procedure."

2. Provide certification that welders to be employed in the work have satisfactorily passed AWS qualification tests within the previous 3 months. Submit certification to the Sandia Delegated Representative a minimum of 15 days prior to performing any welding.

3. If recertification of welders is required, retesting will be the Contractor's responsibility.

D. Design of Members and Connections:

1. Details shown are typical; similar details apply to similar conditions, unless otherwise indicated. Verify dimensions at the site whenever possible without causing delay in the work.

2. Promptly notify Sandia Delegated Representative whenever design of members and connections for any portion of the structure are not clearly indicated.

1.04 SUBMITTALS

A. Product Data: Submit copies of producer's or manufacturer's specifications and installation instructions for the following products. Include laboratory test reports and other data as required to show compliance with these specifications (including specified standards). Distribute copies of each applicable instruction to fabricators, installers and erectors.

1. Structural steel (each type), including certified copies of mill reports covering the chemical and physical properties.

2. High-strength bolts (each type), including nuts and washers

3. Unfinished bolts and nuts

4. Structural steel primer paint

5. Shrinkage-resistant grout

B. Shop Drawings:

1. In accordance with Specification Section 01300 submit shop and erection drawings for structural steel work to Sandia Delegated Representative for review. Manufacturing or fabricating of material or the performing of work prior to review of shop drawings shall be entirely at the risk of the Contractor.

2. Shop drawings shall include information necessary for the fabrication and erection of the component parts of the structure. They shall indicate size and weight of members, camber, holes and location of shop and field connections, the type, size and extent of welds, and the welding sequence when required. The welding symbols used on the shop drawings shall be as adopted by the American Welding Society. The proposed shop primer shall be indicated on the shop drawings.

3. Provide setting drawings, templates, and directions for the installation of anchor bolts and other anchorages to be installed by others.

4. The review of shop drawings will be for size and arrangement of principal and auxiliary members and connections detailed on design drawings.

5. Corrections or comments made on the shop drawings during Sandia Delegated Representative's review do not relieve the Contractor from compliance with requirements of the drawings and specifications. The review is only for general conformance with the design concept of the project and general compliance with the information given in the contract documents. The Contractor is responsible for confirming and correlating quantities and dimensions; coordinating his work with that of other trades; and performing his work in a safe and satisfactory manner.

6. In general, the drawings are made to scale, but scale measurements shall not be used in locating or arranging the members. The fabricator shall check the contract drawings before proceeding with detailing and report errors or inconsistencies discovered therein to the Sandia Delegated Representative before starting shop detailing.

7. Revisions shown on the shop drawings shall be considered as changes necessary to meet specified requirements and shall not be taken as the basis of claims for extra work.

C. Surveys:

1. Submit certified copies of each survey conducted by a registered professional engineer, showing elevations and locations of base plates and anchor bolts to receive structural steel, and final elevations and locations for major members. Indicate discrepancies between actual installation and contract documents.

1.05 PRODUCT HANDLING, DELIVERY AND STORAGE

A. Handling: Handle steel in such a manner to prevent damage to steel member and shop primer.

B. Delivery: Deliver structural steel to conform to erection schedules. Deliver anchor bolts and loose bearing plates in advance of other steel, as required.

C. Storage: Store steel aboveground on platforms, skids or other support and keep free from dirt, grease and other foreign matter. Store materials to permit easy access for inspection and identification.

D. Do not store materials on the structure in a manner that might cause distortion or damage to the members or the supporting structures. Repair or replace damaged materials or structures as directed.

1.06 REJECTING MATERIAL

A. Damaged material and material not conforming to the specifications and drawings may be rejected by the Sandia Delegated Representative at any time nonconformities are discovered until final acceptance of the work. Remove rejected materials and replace without additional cost to the Sandia National Laboratories.

PART 2 - PRODUCTS

2.01 MATERIALS

A. Structural steel shapes and plates and bars shall conform to ASTM Specification A36.

B. Cold-formed structural steel tubing shall conform to ASTM A500, Grade B.

C. Anchor Bolts: ASTM A 307, nonheaded type unless otherwise indicated.

D. High-Strength Threaded Fasteners: Heavy hexagon structural bolts, heavy hexagon nuts, and hardened washers, as follows:

1. Quenched and tempered medium-carbon steel bolts, nuts and washers, complying with ASTM A 325, friction type.

E. Unfinished Threaded Fasteners: ASTM A 307, Grade A, regular low- carbon steel bolts and nuts. Provide hexagonal heads and nuts for all connections.

F. Welding Electrodes: Comply with AWS Code.

G. Headed stud shear connectors shall be automatic welded type conforming to ASTM A- 108, Grade 1015, cold finished carbon steel, with dimensions complying with AISC specifications.

H. Steel castings shall conform to ASTM A27, Grade 65-35, medium- strength carbon steel.

I. Shop Primer: Manufacturer's standard primer shall be used when it is compatible with specified finished paint. For other requirements see Specification Section 09900.

J. Nonmetallic Nonshrink Grout: Premixed, nonmetallic, noncorrosive, nonstaining product containing selected silica sands, Portland cement, shrinkage compensating agents, plasticizing and water reducing agents, complying with CRD-C588, Type A.

2.02 FABRICATION

A. Fabricate and assemble steel to conform to current edition of AISC "Specification for the Design, Fabrication and Erection of Structural Steel for Buildings" and "Code of Standard Practice for Steel Buildings and Bridges" and as indicated on final shop drawings. Fabricate and assemble structural assemblies in the shop to greatest extent possible.

B. Properly mark and matchmark materials for field assembly. Fabricate for delivery sequence which will expedite erection and minimize field handling of materials.

C. Where finishing is required, complete assembly, including welding of units, before start of finishing operations. Provide finish surfaces of members exposed in final structure free of markings, burrs, and other defects.

D. Punching: Punch holes clean without torn or ragged edges. Remove sharp fins before bolting. Punch steel for attachment of wood nailers, anchors or for other purposes as shown.

E. Holes for Other Work:

1. Provide holes required for securing other work to structural steel framing, and for the passage of other work through steel framing members, as shown on the final shop drawings. Provide threaded nuts welded to framing, and other specialty items as shown to receive other work.

2. Cut, drill, or punch holes perpendicular to metal surfaces. Do not flame-cut holes or enlarge holes by burning. Drill holes in bearing plates.

F. Provide camber in structural members where indicated.

2.03 CONNECTIONS

A. General: Weld or bolt shop and field connections as indicated.

B. Bolted Connections:

1. Provide high-strength threaded fasteners for principal bolted connections, except where unfinished bolts are shown. Assemble high strength bolted connections in accordance with "Specification for Structural Joints Using ASTM A325 Bolts." Unless otherwise noted on drawings, high strength bolted connections shall be of friction type.

2. Provide unfinished threaded fasteners for temporary bracing to facilitate erection.

3. Washers: Use a hardened washer under the element turned in tightening for high strength bolts, regardless of method of tightening. When an outer face of bolted parts has a slope greater than 1:20 with respect to a plane normal to the bolt axis, use a beveled washer to compensate for lack of parallelism.

4. Methods of Tightening: Tighten all bolts by use of "Direct Tension Indicators", by Cooper & Turner or equal, as per ASTM F959.

5. Provide not less than two bolts per connection. Remove burrs, pits and other defects from contact surfaces of steel where members are joined.

C. Welded Connections:

1. Execute welding with welders qualified in accordance with requirements outlined in Part 1 of this section. Comply with AWS Code for equipment, procedures, appearance and quality of welds, and methods used in correcting welding work. Clean surfaces as outlined in AWS D1.1. Remove fins and burrs from joint surfaces. Finish member true to line and free from twists, bends, and open joints.

D. Shear Connectors:

1. Prepare steel surfaces as recommended by manufacturer of shear connectors. Use automatic end welding of headed stud shear connectors in accordance with manufacturer's printed instructions.

2.04 SHOP PAINTING

A. General: Shop prime structural steel work, except those members or portions of members to be embedded in concrete or mortar. Prime embedded steel which is partially exposed on the exposed portions and the initial 2" of embedded areas only.

1. Do not paint surfaces which are to be welded or high- strength bolted with friction-type connections.

B. Surface Preparation: After inspection and before shipping, clean steelwork to be painted. Remove loose rust, loose mill scale, and spatter, slag or flux deposits. Clean steel in accordance with Steel Structures Painting Council SP-3, "Power Tool Cleaning."

C. Painting: Immediately after surface preparation, apply structural steel primer paint in accordance with the manufacturer's instructions and at a rate to provide a uniform dry film thickness of 2.0 mils. Use painting methods which will result in full coverage of joints, corners, edges and all exposed surfaces.

D. For finish paint, see Specification Section 09900.

PART 3 - EXECUTION

3.01 INSPECTION TESTS

A. Structural steel shall be identified by heat or melt numbers. In case of inability to provide the foregoing identification, commercial stock may be used without further testing, provided that all of the fabricator's stock purchases are

demonstrated to conform to the material specifications set forth herein and are accompanied by mill analyses, test reports, and certified affidavits.

B. If the steel cannot be identified, or its source is questionable, one set of physical tests shall be made on each unit quantity or weight of materials as required to establish the quality of the steel. Testing, inspecting, and sampling required shall be done by a laboratory approved by Sandia Delegated Representative and shall be done at no additional cost to the Sandia National Laboratories.

C. Shop and field welds shall be performed by welders whose current certification has been submitted to Sandia Delegated Representative for review. Welders shall be prequalified for specific types of welds. Qualifications shall be submitted to Sandia Delegated Representative and deemed acceptable prior to performing any welds on the job.

D. When in the judgment of Sandia Delegated Representative, inspection and testing are required, the Sandia National Laboratories will engage an independent testing and inspection agency to inspect high-strength bolted connections and welded connections and to perform tests and prepare test reports.

1. Testing agency shall conduct and interpret tests and state in each report whether test specimens comply with requirements, and specifically state any deviations therefrom.

2. Provide access for testing agency to places where structural steel work is being fabricated or produced so that required inspection and testing can be accomplished.

3. The testing agency may inspect structural steel at plant before shipment; however, Sandia Delegated Representative reserves right, at any time before final acceptance, to reject material not complying with specified requirements.

E. Correct deficiencies in structural steel work which inspections and laboratory test reports have indicated to be not in compliance with requirements. Perform additional tests, at Contractor's expense, as may be necessary to reconfirm any noncompliance of original work, and as may be necessary to show compliance of corrected work.

3.02 ERECTION

A. General: Comply with the AISC Specifications and Code of Standard Practice and as herein specified.

B. A nonself-supporting steel frame is one that requires interaction with other elements not classified as Structural Steel to provide the required stability or resistance to wind and seismic forces. The permanent connections between the

frames and the supporting elements shall be provided as identified in the contract documents. It shall be the Contractor's responsibility, coordinating with the erector and other appropriate subcontractors to identify these frames and to provide a sequence and schedule of placement of such elements and to furnish and install the necessary temporary supports.

C. Members forming parts of the structure assembled shall be aligned properly and the structure shall be plumbed accurately and then secured. Tolerance in the alignment shall conform to those specified in the AISC "Code of Standard Practice." The erector shall furnish to Sandia Delegated Representative certification in writing that the structure has been checked for alignment and meets the above requirements.

D. Surveys: Employ a registered professional engineer, or licensed land surveyor experienced in survey work, to establish permanent bench marks as shown and as necessary for the accurate erection of structural steel. Check elevations of concrete and masonry bearing surfaces and locations of anchor bolts and similar devices, before erection work proceeds. Report discrepancies to Sandia Delegated Representative.

E. Temporary Shoring and Bracing: Provide temporary shoring, guying, and bracing members with connections of sufficient strength to bear imposed loads as required for erection. Remove temporary members and connections when permanent members are in place and final connections are made except that temporary members and connections may be left in place when they will not interfere with final construction. Provide temporary guy lines to achieve proper alignment of the structures as erection proceeds.

F. Temporary Planking: Provide temporary planking and working platforms as necessary to effectively complete the work.

G. Anchor Bolts: Furnish anchor bolts and other connectors required for securing structural steel to foundations and other in-place work. Furnish templates and other devices as necessary for presetting bolts and other anchors to accurate locations.

H. Setting Bases and Bearing Plates: Clean concrete of bond-reducing materials and roughen to improve bond to surfaces. Clean the bottom surface of base and bearing plates.

1. Set loose and attached base plates and bearing plates for structural members on wedges or other adjusting devices.

2. Tighten anchor bolts after the supported members have been positioned and plumbed. Do not remove wedges or shims, but if protruding, cut off flush with the edge of the base or bearing plate prior to packing with grout.

3. Pack grout solidly between bearing surfaces and bases of plates to ensure that no voids remain. Finish exposed surfaces, protect installed materials, and allow to cure. For proprietary grout materials, comply with manufacturer's instructions.

I. Field Assembly: Set structural frames accurately to lines and elevations indicated. Align and adjust the various members forming a part of a complete frame or structure before permanently fastening. Clean bearing surfaces and other surfaces which will be in permanent contact before assembly. Perform necessary adjustments to compensate for discrepancies in elevations and alignment.

1. Level and plumb individual members of the structure within specified AISC tolerances.

2. Splice members only where shown or specified.

J. Erection Bolts: On exposed welded construction, remove erection bolts, fill holes with plug welds and grind smooth at exposed surfaces.

K. Comply with AISC Specifications for bearing, adequacy of temporary connections, alignment, and the removal of paint on surfaces adjacent to field welds. Do not enlarge holes in members by burning or by the use of drift pins. Ream holes that must be enlarged to admit bolts.

L. Gas Cutting: Do not use gas cutting torches in the field for correcting fabrication errors in the structural framing. Cutting will be permitted only on secondary members which are not under stress, as acceptable to Sandia Delegated Representative. Finish gas-cut sections equal to a sheared appearance when permitted.

M. Touch-Up Painting: Immediately after erection, clean field welds, bolted connections, and abraded areas of shop paint. Apply paint to exposed areas with the same material as used for shop painting. Apply by brush or spray to provide a minimum dry film thickness of 2.0 mils.

END OF SECTION

INSTRUCTIONS FOR EDITING - SECTION 05100

Items listed below are the most common areas requiring editing. It is not intended to be a full list of items to be edited. The entire section must be reviewed, coordinated with drawings and other specification sections, and edited as required.

Part 1 - 1.02 Delete or add sections as required.

Part 1 - 1.03A Delete or add items as required.

Part 1 - 1.04A Delete or add items as required.

Part 1 - 1.04C Delete if project type or size does not justify expense.

Part 2 - 2.01 Delete or add materials as required. Where more than one type of steel is required, coordinate with drawings to show extent of each type and the specific details of construction which apply.

Part 2 - 2.01K Revise primer as required to suit project requirements. Coordinate with surface preparation and future topcoat if any. Refer to SSPC for excellent description of primer types and uses.

Part 2 - 2.02F Delete if not required. Coordinate with drawings to show amount and location of camber where required.

Part 2 - 2.04B Revise surface preparation as required. Coordinate with painting requirements.

Part 2 - 2.04C Revise thickness as required for protection desired.

Part 2 - 2.04D Delete, if not applicable. Coordinate with project architect, or civil engineer in case of treatment plant.

Part 3 - 3.01D Coordinate to determine preference concerning Sandia paid for or Contractor paid for testing. If contractor to pay for testing, define scope of testing to be performed (i.e., type of tests and number of tests). If Sandia is to pay for testing, make certain to budget for potential cost involved with testing so there are no surprises.

THE FOLLOWING INFORMATION IS FURNISHED FOR ASSISTANCE IN SPECIFYING WELD TESTING:

A. NONDESTRUCTIVE TESTING

The various methods presently available for nondestructive testing of welds and visual inspection are as follows:

1. Liquid Penetrant Method

There are two basic types of penetrants used in inspection, namely, fluorescent and colored dyes. Basically, both are alike in that a penetrating liquid is used in conjunction with a suitable developer to reveal surface discontinuities. Surfaces to be tested are first cleaned of foreign matter, oil, etc., then are sprayed or brushed with the penetrant, or dipped in it. After a specified length of time, the surface is rinsed with water, emulsifier, or cleaner, and dried.

A developer is then applied to the surface, either a dry powder or a developer solution. As the developer dries or is allowed to stand, it will draw the penetrant out of surface discontinuities and stain the developer surface. This discoloration is fluorescent under black light in the case of fluorescent dyes and red on a white background in the case of the colored dye.

The penetrant method is used for revealing surface cracks, pores, leaks, and similar discontinuities, some of which can be discovered by plain visual inspection.

It is a handy method to define the extent of existing surface cracks and is extremely useful in the maintenance field in the detection of fatigue cracks in their early stages.

Advantages of this method:

a. Very simple and inexpensive equipment.
b. The equipment is readily portable.
c. Little training or experience is required on the part of operators.

Recently there has been some reluctance against the use of this method on structural work. There are some factors which mut be considered when using this method.

a. Ineffectiveness in the detection of subsurface defects.
b. Limitations imposed by temperature (recommended conditions, 70 - 150 F.).
c. Reasonably smooth finish of welds is essential for reliable indications.

2. Magnetic Particle Inspection

Current induced in a conductor produces an electromagnetic field, with its lines of force flowing in concentric circles at right angles to the conductor. In case of a flaw or crack, each face of the discontinuity assumes opposite polarity, producing a flux leakage across the air gap.

If a fine magnetic powder is dusted on the surface or if magnetic particles suspended in a liquid bath are applied to the work, with the current flowing, the particles near the defect being attracted by the local poles tend to build up across the gap, thus locating the defect

in size and direction. This happens provided the crack occurs normal to the path of the magnetic forces. This necessitates testing at 90 degrees to the original direction.

Magnetic particle inspection is used primarily for location of surface defects, although, when properly applied, it can furnish some information regarding subsurface discontinuities.

Among the advantages of this method are:

a. Reasonably inexpensive equipment.
b. Equipment is reasonably portable.
c. Training of inspectors is fairly short and simple.
d. Suitability for root-pass investigations, the method offering less interference with general progress of welding, mainly because of simplicity in cleaning, although certain time losses are incurred in cooling down of welds.

Disadvantages of this method are:

a. Subsurface detection not too reliable.
b. Reasonable smooth finish of welds is desirable for success.

There are some variations of this method, developed recently, that increase its effectiveness and enhance its potential for structural welding application.

3. Radiographic Inspection

Radiographic inspection makes use of the ability of shortwave radiations, such as X-rays or gamma rays, to penetrate objects opaque to ordinary light. It is a method which can show the presence and nature of defects or other structural discontinuities, in the interior of welds, as well as show external defects. The two common types of radiations in use are X-rays and gamma rays.

When a weld is subjected to radiation, some of the radiations are absorbed by and some penetrate the weld, the amount of absorption being a function of the density of the weld, metal and the thickness of the weld.

If the weld is porous or has a slag inclusion, the amount of radiation passing through at the fault will be greater than that passing through the sound portion of the weld. This variation can be recorded on a film that is sensitive to the radiation. An image, called a radiograph, indicating the presence of the defect, is produced.

The advantages of this method are:

a. Positive identification of defects.
b. Permanent record.
c. Good sensitivity.

The disadvantages of the method are:

a. Expensive equipment.
b. Equipment is bulky to handle.
c. Health hazard involved necessitates precautionary measures during application.
d. Time losses due to considerable exposure time (gamma ray).
e. The method is applicable to limited types of joints ("Tee" joints and joints with complicated geometry may be impossible to inspect).
f. Results are available only after films exposed (adding to time loss).
g. Tight laminations and cracks parallel to weld surface are not detectable.

The radiographic method of inspection is definitely the most positive method of inspection within its limitations and should be preferred where applicable.

4. Ultrasonic Inspection

Ultrasonic sound waves of the type suitable for weld testing fall into the category of longitudinal, shear, and surface waves. The waves are radiated and detected by means of piezoelectric crystals held in contact with the surface of the test piece.

The transducer sends a wave train into a test piece consisting of several waves that are radiated in a few millionths of a second. Reflections of this wave train from very small flaws are observed on a cathode-ray tube.

Ultrasonic waves are interrupted wherever the solid material has a considerable change in density. Thus, they would be interrupted by any discontinuity no matter what its size, shape or orientation. Various techniques may be employed to determine these characteristics of the defect and its location.

Wave pulses are also reflected from the surface of the material being tested. It has been found that the configuration of a welded joint can cause indications on the cathode-ray tube which might hide possible weld faults.

In appraising the ultrasonic inspection method, it is necessary to point out that :

a. A high degree of skill and competence is required on part of ultrasonic personnel in order to identify rejectable discontinuities.
b. Equipment requires frequent adjustment and calibration.
c. This method can be made extremely sensitive so that irrelevant indications from discontinuities in welds such as grain boundaries are picked up.
d. It does not leave a permanent record, as interpretation must be made by the observer on the job. However, photographs may be taken if this record is desired.

The advantages of this method are:

a. Readily portable equipment.
b. The method is not too disruptive other work during application.
c. Results are provided at the time of application, and each defect can be observed again and again.
d. In some structural joint configuration this is the only feasible method to use.

5. Visual Welding Inspection

All welding inspection may be considered visual in a broad sense. However, visual inspection, as referred to here, is inspection without the use of auxiliary equipment other than a weld size gauge and possibly a magnifying glass.

Visual inspection is the method most commonly employed for welded steel structures. A certain amount of visual inspection must always be done. If it is properly undertaken, then additional methods may be eliminated.

B. FREQUENCY OF TESING

Bolted Connections AISC and "Specification for Structural Joints Using ASTM A325 or A490 Bolts" specify that 10% of the installed bolts, but not less than 2 bolts, of each connection be tested.

Welded Connections Neither AISC not AWS make any specific recommendations regarding frequency of inspection or method of testing for welded connections. As a minimum, all welds should be inspected visually. Other method of nondestructive testing and their frequency of testing must be clearly specified, as who is to do the work.

The AWS Structural Welding Code specifies, "When nomdestructive testing is to be required, it shall be so stated in the information to bidders. This information shall designate the welds to be examined, the extent of examination of each weld, and the method of testing."

END OF EDITING INSTRUCTIONS

SECTION 05200

STEEL JOISTS

PART 1 - GENERAL

1.1 RELATED DOCUMENTS

A. Drawings and general provisions of Contract, including General and Supplementary Conditions and Division-1 Specification Sections, apply to work of this section.

1.02 DESCRIPTION OF WORK

A. Work under this section consists of furnishing labor, materials, equipment and services necessary for the fabrication, delivery and erection of steel joists, as shown on drawings and specified herein.

B. The work includes joists, joist bridging, bridging anchors, anchor bolts, bearing plates and other items of structural steel required to anchor the joists to steel, concrete or masonry work.

1.03 QUALITY ASSURANCE

A. Applicable Standards: Conform to the current edition of the following standards:

1. SJI: Standard Specifications Load Tables and Weight Tables for Steel Joists and Joist Girders.

2. SJI: Recommended Code of Standard Practice for Steel Joists and Joist Girders.

3. AISC: Code of Standard Practice for Steel Buildings and Bridges.

4. AISC: Specification for the Design, Fabrication and Erection of Structural Steel for Buildings.

5. AISI: Specification for the Design of Cold-Formed Steel Structural Members.

6. AWS D1.1: Structural Welding Code

7. ASTM A36: Specifications for Structural Steel

8. SSPC: Steel Structures Painting Council Systems and Specifications.

B. Source Quality Control: The materials and fabrication procedures to be furnished under this specification shall be subject to inspection in the mill, shop and field by a qualified inspection agency. Inspection will be conducted without expense to the Contractor; however, inspection in the mill, shop or field shall not relieve the Contractor of his responsibility to furnish materials and fabrication procedures in accordance with specified requirements. Promptly remove and replace materials or fabricated components which do not comply.

C. Qualifications for Welding Work:

1. Qualify welding processes and welding operators in accordance with the AWS "Standard Qualification Procedures."

2. Provide certification that welders to be employed in the work have satisfactorily passed AWS qualification tests within the previous 12 months. Submit certification to the Sandia Delegated Representative a minimum of 15 days prior to performing any welding.

3. If recertification of welders is required, retesting will be the Contractor's responsibility.

1.04 SUBMITTALS

A. Product Data: Submit joist and joist girders design calculations by a California licensed structural engineer and manufacturer's specifications and installation instructions for each type of joist and its accessories. Include manufacturer's certification that joists comply with AISC-SJI "Specifications." Distribute copies of applicable instructions to installers and erectors.

B. Shop Drawings:

1. In accordance with Specification Section 01300, submit shop and erection drawings for steel joists to the Sandia Delegated Representative for review. Manufacturing or fabricating of material or the performing of work prior to review of shop drawings shall be entirely at the risk of the Contractor.

2. Shop drawings shall include information necessary for the fabrication and erection of the component parts of the joists. They shall indicate joist type, number, size, spacing, bridging, connections, headers, anchoring, bearing plates, and all other details of erection, surface preparation painting, grade of steel, type, size and extent of welds, and the welding sequence when required. The welding symbols used on the shop drawings shall be as adopted by the American Welding Society. The proposed shop primer shall be indicated in the shop drawings.

3. Provide setting drawings, templates, and directions for the installation of anchor bolts, bearing plates and other anchorages to be installed by others.

4. Corrections or comments made on the shop drawings during the Sandia Delegated Representative's review do not relieve the Contractor from compliance with requirements of the drawings and specifications. The review of shop drawings is only for general conformance with the design concept of the project and general compliance with the information given in the contract documents. The Contractor is responsible for confirming and correlating quantities and dimensions; coordinating his work with that of other trades; and performing his work in a safe and satisfactory manner.

5. In general, the drawings are made to scale, but scale measurements shall not be used in locating or arranging the members. The fabricator shall check the contract drawings before proceeding with detailing and report errors or inconsistencies discovered therein to the Sandia Delegated Representative before starting shop detailing.

6. Revisions shown on the shop drawings shall be considered as changes necessary to meet specified requirements and shall not be taken as the basis of claim for extra work.

1.05 PRODUCT DELIVERY, HANDLING AND STORAGE

A. Delivery: Deliver joists to conform to erection schedule. Deliver anchor bolts and loose bearing plates in advance of other steel as required.

B. Handling: Exercise care in unloading, storing and delivering joists to prevent bending, warping and twisting of joist units and damage to shop primer.

C. Storage: Store joists aboveground on platforms, skids or other support and keep free from dirt, grease and other foreign matter. Store materials to permit easy access of inspection and identification.

D. Do not store materials on the structure in a manner that might cause distortion or damage to the members or the supporting structure. Repair or replace damaged materials or structures as directed.

PART 2 - PRODUCTS

2.01 MATERIALS

A. Joists: The joists shall be designed, fabricated and erected in accordance with the Standard Specifications Load Tables and Weight Tables for Steel Joists and Joist Girders current edition, and with modifications as indicated on the drawings and

specified herein. Special attention shall be given to special bearing seat requirements.

B. Joist Bearing Plates and Bridging shall conform to ASTM A36.

C. Welding Electrodes: Comply with AWS Code.

D. Unfinished Threaded Fasteners: ASTM A307, Grade A, regular low-carbon steel bolts and nuts. Provide hexagonal heads and nuts for all connections.

E. High-Strength Threaded Fasteners: ASTM A325 heavy hexagon structural bolts with nuts and hardened washers.

F. Shop Primer: Comply with AISC-SJI "Specifications" except that primer shall be compatible with finish paint where specified. Asphalt type paint shall not be permitted.

2.02 FABRICATION

A. Fabricate steel joists in accordance with AISC-SJI "Specifications."

B. Provide extended ends on joists where shown, complying with the manufacturer's standards and requirements of applicable AISC-SJI "Specifications" and load tables.

C. Provide ceiling extensions in areas having ceilings attached directly to joist bottom chord. Provide either an extended bottom chord element or a separate unit, to suit manufacturer's standards, of sufficient strength to support the ceiling construction. Extend ends to within 1/2" of the finished wall surface unless otherwise indicated.

D. Bridging:

1. Provide horizontal or diagonal type bridging for "open web" joists, complying with AISC-SJI "Specifications."

2. Provide diagonal type bridging for "long span" joists or where shown on drawings, complying with AISC-SJI "Specifications."

3. Provide bridging anchors for ends of all bridging lines terminating at walls or beams.

E. End Anchorage: Provide end anchorages to secure joists to adjacent construction, complying with AISC-SJI "Specifications," unless otherwise indicated.

F. Header Units: Provide header units to support tail joists at openings in floor or roof system not framed with steel shapes.

2.03 SHOP PAINTING

A. Remove loose scale, heavy rust, and other foreign materials from fabricated joists and accessories before application of shop paint. Clean steel in accordance with Steel Structures Painting Council SP.3, "Power Tool Cleaning."

B. Apply one shop coat of steel joist primer paint to steel joists and accessories, by spray, dipping, or other method to provide a continuous dry paint film thickness of not less than 1.0 mil.

C. For finish painting see Specification Section 09900.

PART 3 - EXECUTION

3.01 INSPECTION

A. Steel used in fabrication of joists shall be identified by heat or melt numbers. In case of inability to provide the foregoing identification, commercial stock may be used without further testing, provided that all of the fabricator's stock purchases are demonstrated to conform to the material specifications set forth herein and are accompanied by mill analyses, test reports, and certified affidavits.

B. If the steel cannot be identified, or its source is questionable, one set of physical tests shall be made on each unit quantity or weight of material as required to establish the quality of the steel. Testing, inspecting, and sampling required shall be done by a laboratory approved by the Sandia Delegated Representative and shall be done at no additional cost to the Sandia National Laboratories.

C. Shop and field welds shall be performed by welders whose current certification has been submitted to the Sandia Delegated Representative for review. Welders shall be prequalified for specific types of welds. Qualifications shall be submitted to the Sandia Delegated Representative and deemed acceptable prior to performing and welds on the job.

D. Welds that are deemed by the Sandia National Laboratories or Sandia Delegated Representative to be unacceptable or questionable shall be tested by ultrasonic or radiographic inspection by an independent testing and inspection agency at the Sandia National Laboratories unless the welds prove to be unacceptable. Cost of testing, removal and rewelding of deficient welds shall be paid by the Contractor.

3.02 ERECTION

A. Place and secure steel joists in accordance with AISC-SJI "Specification," final shop drawings, and as herein specified.

B. Furnish anchor bolts and other devices to be built into the concrete construction. Furnish templates for the accurate location of anchors in other work. Furnish unfinished threaded fasteners for anchor bolts, unless otherwise indicated.

C. Placing Joists:

1. Do not start placement of steel joists until supporting work is in place and secured. Place joists on supporting work, adjust and align in accurate locations and spacing before permanently fastening.

2. Provide temporary bridging, connections, and anchors to ensure lateral stability during construction. Where "open web" joist lengths are 40 feet and longer, install a center row of bolted bridging to provide lateral stability before slackening of hoisting lines.

3. The joists shall be permanently fastened to support and bridging and anchors completely installed before any construction loads, other than workmen, are placed on the joists.

D. Bridging: Install bridging simultaneously with joist erection, before construction loads are applied. Anchor ends of bridging lines at top and bottom chords where terminating at walls or beams.

E. Fastening Joists:

1. Field weld joists to supporting steel framework in accordance with AISC-SJI "Specifications" for the type of joists used. Coordinate welding sequence and procedure with the placing of joists. Welding shall be executed in accordance with AWS and only by welding operators who have been previously qualified for the type of work required.

2. Bolt joists to support steel framework in accordance with ASIC-SJI "Specifications" for the type of joists used.

a. Provide high-strength threaded fasteners for bolted connections of steel joists to steel columns, and at other locations where shown, installed in accordance with AISC "Specifications for Structural Joists Using ASTM A 325 Bolts."

F. After joist installation, paint field bolt heads and nuts, and welded areas, abraded or rusty surfaces on joists and steel supporting members. Wire brush surfaces and clean with solvent before painting. Use the same type of paint as used for shop painting.

END OF SECTION

SECTION 05300

METAL DECKING

PART 1 - GENERAL

1.01 RELATED DOCUMENTS

A. Drawings and general provisions of Contract, including General and Supplementary Conditions and Division-1 Specification Sections, apply to work of this section.

1.02 DESCRIPTION

A. Work under this section consists of furnishing labor, materials, equipment and services necessary for the fabrication, delivery, unloading, storage, and installation of all metal decking, complete with accessories, as shown on drawings and specified herein.

B. The types of metal decking required include the following:

1. Metal Roof Decking

2. Composite Metal Decking for elevated floor slab and platform

1.03 QUALITY ASSURANCE

A. Codes and Standards:

1. Comply with the provisions of the following codes, specifications, and standards, except where more stringent requirements are shown or specified:

a. AISI: Specification for the Design of Cold-Formed Steel Structural Members.

b. AISI: Cold Formed Design Manual.

c. SDI: Steel Roof Deck Design Manual.

d. AWS: Structural Welding Code.

e. ASTM A 525: Specification for Steel Sheet, Zinc-Coated (Galvanized), by the Hot-Dip Process, General Requirements.

f. ASTM A 526: Specification for Steel Sheet, Zinc-Coated (Galvanized) by the Hot-Dip Process, Commercial Quality.

B. The materials and fabrication procedures to be furnished under this section shall be subject to inspection and testing in the mill, shop, and field by a qualified inspection agency. Inspection and testing performed shall not relieve the Contractor of his responsibility to furnish materials and workmanship in accordance with contract requirements. Inspection and testing will be conducted at the expense of the Sandia National Laboratories, except that where tests show material or workmanship to be defective the costs of testing will be paid for by the Contractor. Remove work that does not meet specification requirements, and replace at no cost to the Sandia National Laboratories.

C. Qualifications for Welding Work:

1. Qualify welding processes and welding operators in accordance with AWS "Standard Qualification Procedures."

2. Provide certification that welders to be employed in the work have satisfactorily passed AWS qualification tests within the previous 12 months. Submit certification a minimum of fifteen (15) days prior to performing any welding.

3. If recertification of welding is required, retesting will be the Contractor's responsibility.

D. Performance Requirements:

1. Compute the properties of metal deck sections on the basis of the effective design width as limited by the provisions of the AISI Specifications. Provide not less than the deck section properties shown, including section modulus and moment of the inertia per foot of width.

2. Install and anchor roof deck units to resist gross uplift loading of 45 lbs. per sq. ft. at eave overhang and 30 lbs. per sq. ft. for other roof areas.

3. Underwriters Label:

a. Provide metal deck units listed in Underwriters Laboratories "Fire Resistance Index," with each required deck unit bearing the UL label and marking for the specified system detailed.

1.04 SUBMITTALS

A. Product Data: Submit copies of manufacturer's specifications and installation instructions for each type of decking and accessories. Include manufacturer's

certification as may be required to show compliance with these specifications. Distribute copies of applicable instructions to installers and erectors.

B. Shop Drawings:

1. In accordance with Specification Section 01300, submit detailed shop drawings for metal deck to the Sandia Delegated Representative for review. Manufacturing or fabricating of material or the performing of work prior to review of shop drawings will be entirely at the risk of the Contractor.

2. Shop drawings shall show layout and types of deck panels, anchorage details and conditions requiring closure panels, supplementary framing, sump pans, cut openings, special jointing, or other accessories. Shop drawings also shall show finish of metal deck to be furnished.

3. Corrections or comments made on the shop drawings during the Sandia Delegated Representative's review do not relieve the Contractor from compliance with requirements of the drawings and specifications. The review of shop drawings is only for general conformance with the design concept of the project and general compliance with the information given in the contract documents. The Contractor is responsible for confirming and correlating quantities and dimensions, coordinating his work with that of other trades, and performing his work in a safe and satisfactory manner.

4. In general, the drawings are made to scale, but scale measurements shall not be used in locating or arranging the members. The fabricator shall check the contract drawings before proceeding with detailing and report errors or inconsistencies discovered therein to the Sandia Delegated Representative before starting shop detailing.

5. Revisions shown on the shop drawings shall be considered as changes necessary to meet specified requirements and shall not be taken as the basis of claim for extra work.

1.05 PRODUCT DELIVERY, HANDLING, AND STORAGE

A. Delivery: Deliver metal deck to conform to erection schedule.

B. Handling: Exercise care in unloading, storing, and erecting deck to prevent bending, warping, twisting of deck, and damage to finish.

C. Storage: Store deck off ground and protect with a waterproof covering. Elevate one end of deck to provide proper drainage. Store materials to permit easy access for inspection and identification.

D. Do not store materials on the structure in a manner that might cause distortion or damage to the members or the supporting structure. Coordinate and cooperate with structural steel erector in locating decking bundles to prevent overloading of structural members.

E. Repair or replace damaged materials or structures as directed.

PART 2 - PRODUCTS

2.01 MATERIALS

A. Sheet Metal Accessories: ASTM A 526, Commercial Quality, Galvanized

B. Galvanizing: ASTM A 525

C. Miscellaneous Steel Shapes: ASTM A 36

D. Shear Connectors: See Specification Section 05100, Structural Metal Framing.

E. Galvanizing Repair Paint: High zinc-dust content paint for repair of damaged galvanized surfaces complying with Military Specifications MIL-P-21035.

F. Flexible Closure Strips: Manufacturer's standard vulcanized, closed-cell, synthetic rubber.

2.02 FABRICATION

A. General: Form deck units in lengths to span three or more supports, where possible, with flush, telescoped or nested 2" laps at ends and interlocking or nested side laps, unless otherwise indicated. Provide deck configurations complying with SDI "Basic Design Specifications," and as specified herein.

B. Metal Roof Deck:

1. Gauge: U.S. Standard 22 gauge minimum

2. Finish:

a. Manufacturer's standard baked-on rust inhibitive paint

b. Galvanized ASTM A 525, G90

3. Type:

a. Wide-Rib Deck: Depth approximately 1-1/2"; ribs spaced approximately 6" o.c.; width of rib opening at roof surface not more than 2-1/2"; width of bottom rib surface, not less than 1-3/4".

C. Composite Metal Deck:

1. Fabricate open-beam composite metal deck units of steel sheets as indicated on drawings with a fluted section having interlocking side laps. Fabricate deck units with integral embossing or raised patterns to provide mechanical bond with concrete slabs. Composite metal decking shall have a galvanized finish conforming to ASTM A525, G90. Depth of composite metal decking shall be as shown on the drawings. Composite metal deck shall be capable of supporting wet concrete and a construction load of not less than 40 psf without shoring.

D. Accessories:

1. Accessories shall be furnished as necessary to complete deck installation and shall include items of custom and standard manufacture required or indicated. Finish of accessories shall be same as metal deck finish, unless specified otherwise.

2. Metal Cover Plates: Fabricate metal cover plates for end abutting deck units of not less than 18-gauge sheet steel of the same quality as the deck unit. Form to match contour of deck units and approximately 6" wide.

3. Metal Closure Strips: Fabricate metal closure strips, for openings between decking and other construction, of sheet steel of the same quality as the deck units. Minimum thickness shall be 20-gauge for roof deck and 18-gauge for the composite deck units. Form to the configuration required to provide tight-fitting closures at open ends of flutes and sides of decking.

4. Ridge and Valley Plates: Fabricate ridge and valley plates of not less than 20-gauge galvanized sheet steel of the same quality as the deck units; each leg shall be not less than 2-1/4" wide, bent to provide tight-fitting closure with deck units. Provide plates in ten-foot lengths, where possible.

5. Roof Sump Pans: Fabricate from single piece of not less than 14-gauge galvanized sheet steel of the same quality as the deck units. Fabricate with level bottoms and sloping sides to direct water flow to drain, unless otherwise shown. Provide sump pans of adequate size to receive roof drains and with bearing flanges not less than 3" wide. Recess pan not less than 1-1/2" below roof deck surface, unless otherwise shown or required by deck configuration. Holes for drains shall be cut in the field.

PART 3 - EXECUTION

3.01 INSTALLATION

A. Install deck units and accessories in accordance with manufacturer's recommendations and final shop drawings and as specified herein.

B. Place deck units on supporting steel framework, and adjust to final position with ends accurately aligned and bearing on supporting members before being permanently fastened. Do not stretch or contract side lap interlocks. End laps at roof deck shall be 2" or more and shall be made over supports.

C. Place deck units flat and square, secured to adjacent framing without warp or excessive deflection.

D. Do not place deck units on concrete supporting structures until concrete has cured and is dry.

E. Do not use deck units for storage or working platforms until permanently secured.

3.02 FASTENING DECK UNITS

A. Comply with AWS requirements and procedures for manual shielded metal-arc welding, for appearance and quality of welds, and for methods used in correcting welding work. The ambient temperature when the welding is performed shall be 35 degrees F. or higher.

B. The use of welding washers is mandatory.

C. Fasten metal decking units to steel supporting members by top welding using 5/8" diameter puddle welds with maximum spacing as shown in drawings.

D. Metal accessories shall be securely attached by tack welding.

E. Units with burned holes or any other damage shall be replaced with satisfactory units.

3.03 CUTTING AND FITTING

A. Cut and neatly fit deck units and accessories around other work projecting through or adjacent to the decking, as shown on the drawings. Provide neat, square, and trim cuts. Cuts in deck units shall be made in a manner that will not adversely affect the structural properties of the deck or the finished appearance of exposed surface.

3.04 REINFORCEMENT AT OPENINGS

A. Provide additional metal reinforcement and closure pieces as required for strength, continuity of decking, and support of other work shown, unless otherwise shown.

B. Reinforce decking around openings less than 10 inches in any direction by means of a flat steel sheet placed over the opening and fusion welded to the top surface of the deck. Provide steel sheet of the same quality as the deck units, not less than 20 gauge for roof deck and 18 gauge for composite metal deck. Steel sheet shall be at least 12 inches wider and longer than the opening. Provide welds at each corner and spaced not more than 12 inches o.c. along each side.

C. For deck openings larger than 10 inches in any direction, refer to contract drawings.

3.05 METAL JOINT COVERS

A. Provide metal joint covers at abutting ends and changes in direction of floor deck and composite units, except where taped joints are required.

3.06 ROOF SUMP PANS

A. Place roof sump pans over openings provided in roof decking, and weld to top decking surface. Space welds not more than 12 inches o.c. with at least one weld at each corner. Cut opening in roof sump bottom to accommodate drain size indicated.

3.07 METAL CLOSURES

A. Provide metal closures at openings, columns, walls, changes in direction, and other building construction and to close openings between decking and other construction. Tack weld into position to provide a complete decking installation.

B. Provide flexible closure strips in lieu of metal closures, at Contractor's option, wherever their use will ensure complete closure. Install with adhesive in accordance with manufacturer's instructions.

C. Provide metal closure strips for the support of roof insulation where the rib openings in the top surface of roof decking occur adjacent to edges and openings. Securely weld closure strips into position.

3.08 TOUCH-UP PAINTING

A. After decking installation, wire brush, clean and paint scarred areas, welds, and rust spots on the top and bottom surfaces of decking units and supporting steel members.

B. Touch up galvanized surfaces with galvanizing repair paint applied in accordance with the manufacturer's instructions.

C. Touch up painted surfaces with the same paint used in the shop, as recommended by the deck manufacturer.

D. In areas where shop-painted surfaces are to be exposed, apply touch up paint to blend into adjacent surfaces in a manner that will minimize visual discontinuity in the coatings.

END OF SECTION

SECTION 05400

COLD-FORMED METAL FRAMING

PART 1 - GENERAL

1.01 RELATED DOCUMENTS

A. Drawings and general provisions of Contract, including General and Supplementary Conditions and Division-1 Specification Sections, apply to work of this section.

1.02 DESCRIPTION

A. Types of lightgauge metal framing units include the following:

1. "C" shaped steel studs.

2. "C" shaped steel joists.

1.03 QUALITY ASSURANCE

A. Component Design: Compute structural properties of studs and joists in accordance with American Iron and Steel Institute (AISI) "Specification for Design of Cold-Formed Steel Structural Members."

B. Manufacturers offering products complying with requirements for lightgauge metal framing components include the following:

Alabama Metal Industries
Dale Industries, Inc.
Dietrick Industries, Inc.
Marino Industries, Inc.
UGS Industries
U.S. Steel Corp.
Wheeling Corrugating Co.

C. Welding: Use qualified welders and comply with American Welding Society (AWS) D1.3, "Structural Welding Code - Sheet Steel:.

1.04 SUBMITTALS

A. Submit manufacturer's product information and installation instructions for each item of lightgauge framing and accessories.

B. Submit shop drawings for special components and installations not fully dimensioned or detailed in manufacturer's product data.

1. Include placing drawings for framing members showing size and gauge designations, number, type, location, and spacing. Indicate supplemental strapping, bracing, splices, accessories, and details required for proper installation.

1.05 DELIVERY AND STORAGE

A. Protect metal framing units from rusting and damage. Deliver to project site in manufacturer's unopened containers or bundles, fully identified with name, brand, type, and grade. Store off ground in a dry ventilated space or protect with suitable waterproof coverings.

PART 2 - PRODUCTS

2.01 METAL FRAMING

A. System Components: With each type of metal framing required, provide manufacturer's standard steel runners (tracks), blocking, lintels, clip angles, shoes, reinforcements, fasteners, vertical slide clips, and accessories as recommended by manufacturer for applications indicated, as needed to provide a complete metal framing system.

B. Materials and Finishes:

1. 16 gauge units, fabricate metal framing components of structural quality steel sheet with a minimum yield point of 40,000 psi; ASTM A 446, A 570, or A 611.

C. Finish:

1. Provide galvanized finish to metal framing components complying with ASTM A 525 for minimum G 60 coating.

D. Studs:

1. "C"-Shape Studs" Manufacturer's standard steel studs of size indicated, with 1.625" flange and flange return lip.

2. Gauge of Studs: Provide minimum 16 gauge studs. The locations of studs which are heavier than 16 gauge are denoted on the drawings.

E. Joists: Manufacturer's standard C-shape sections of size and guage indicated on the drawings.

2.02 FABRICATION

A. General: Framing components may be prefabricated into panels prior to erection. Fabricate panels plumb, square, true to line and braced against racking with joints welded. Perform lifting of prefabricated panels in a manner to prevent damage or distortion.

B. Fastenings: Attach components by welding.

PART 3 - EXECUTION

3.01 INSTALLATION

A. Install metal framing systems in accordance with manufacturer's printed or written instructions and recommendations, unless otherwise indicated by this specification.

B. Runner Tracks: Install continuous tracks sized to match studs. Align tracks accurately to layout at base and tops of studs. Secure tracks as recommended by stud manufacturer for type of construction involved, except do not exceed 24" o.c. spacing for nail or power-driven fasteners, nor 16" o.c. for other types of attachment. Provide fasteners at corners and ends of tracks.

C. Set studs plumb.

3.02 FIELD PAINTING

A. Touch-up shop-applied protective coatings damaged during handling and installation. Use compatible primer for prime coated surfaces; use galvanizing repair paint for galvanized surfaces.

END OF SECTION

SECTION 05500

METAL FABRICATIONS

PART 1 - GENERAL

1.01 RELATED DOCUMENTS

A. Drawings and general provisions of Contract, including General and Supplementary Conditions and Division-1 Specification Sections, apply to work of this section.

1.02 DESCRIPTION

A. The types of miscellaneous metal items include, but are not limited to the following:

1. Ladders
2. Ladder safety cages
3. Loose bearing plates
4. Miscellaneous framing and supports
5. Angle nosings
6. Anchorage
7. Guardposts
8. Overhead toilet partition supports
9. Safety treads

1.03 QUALITY ASSURANCE

A. Field Measurements: Take field measurements prior to preparation of shop drawings and fabrication, when possible. Do not delay job progress; allow for trimming and fitting whenever taking field measurements before fabrication might delay work.

B. Shop Assembly: Preassemble items in shop to greatest extent possible to minimize field splicing and assembly. Disassemble units as necessary for shipping and handling limitations. Clearly mark units for reassembly and coordinated installation.

C. References to ASTM and Federal standards shall mean the latest edition of that standard.

1.04 SUBMITTALS

A. Submit manufacturer's specifications, anchor details and installation instructions for products to be used in the fabrication of miscellaneous metal work, including paint products.

B. Submit shop drawings for fabrication and erection of miscellaneous metal fabrications. Include plans, elevations, and details of sections and connections. Show anchorage and accessory items. Provide templates for anchor and bolt installation.

1.05 PRODUCT DELIVERY, STORAGE AND HANDLING

A. Materials shall be delivered to the site in a dry and undamaged condition, stored out of contact with the ground, and under a watertight covering, permitting good air circulation. Red lead primer touch-up paint shall be used wherever necessary to prevent formation of rust on ferrous metal items.

PART 2 - PRODUCTS

2.01 MATERIALS AND COMPONENTS

A. Metal Surfaces, General: For fabrication of miscellaneous metal work which will be exposed to view, use materials which are smooth and free of surface blemishes including pitting, seam marks, roller marks, rolled trade names and roughness.

B. Steel Plates, Shapes and Bars: ASTM A 36.

C. Steel Plates to be Bent or Cold Formed: ASTM A 283, Grade C.

D. Steel Tubing: Hot-formed, welded or seamless, ASTM A 501.

E. Steel Bars and Bar-Size Shapes: ASTM A 306, Grade 65, or ASTM A 36.

F. Cold-Finished Steel Bars: ASTM A 108, grade as selected by fabricator.

G. Cold-Rolled Carbon Steel Sheets: ASTM A 366.

H. Galvanized Carbon Steel Sheets: ASTM A 526, with ASTM A 525, G 90 zinc coating.

I. Steel Pipe: ASTM A-53; Grade A; Schedule 40; black finish unless galvanizing is indicated.

J. Concrete Inserts: Threaded or wedge type, galvanized ferrous castings, either malleable iron ASTM A 47 or cast steel ASTM A 27. Provide bolts, washers and shims as required, hot-dip galvanized, ASTM A 153.

K. Nonshrink Nonferrous Grout: CE CRD-C 621-81.

L. Aluminum:

1. Extruded Shapes and Tubes: ASTM B 221 or B 308.

2. Extruded Pipe: ASTM B 429.

3. Plate & Sheet: ASTM B 209, alloy 3003-H16. Use alloy 5005-H16 where anodic coating will be applied.

4. Bars, Rods and Wire: ASTM B 211.

5. Seamless tube: ASTM B 210.

6. Castings: ASTM B 26 or B 108; alloy 214 for natural anodized finish, and alloy 43 for color anodized or baked enamel finish.

7. Forgings: ASTM B 247, alloy 6061-T6.

2.02 FASTENERS

A. General: Provide zinc-coated fasteners for exterior use and where built into exterior walls. Select fasteners for the type, grade and class required.

B. Bolts and Nuts: Regular hexagon head type, ASTM A 307, Grade A.

C. Lag Bolts: Square head type, FS FF-B-561.

D. Machine Screws: Cadmium plated steel, FS FF-S-92.

E. Wood Screws: Flat head carbon steel, FS FF-S-111.

F. Plain Washers: Round, carbon steel, FS FF-W-92.

G. Toggle Bolts: Tumble-wing type, FS FF-B-588, type, class and style as required.

H. Lock Washers: Helical spring type carbon steel, FS FF-W-84.

I. Drilled-In Anchors: Expansion anchors complying with FS FF-S-325, Group VIII (anchors, expansion, [nondrilling]), Type I (internally threaded tubular expansion anchor); and machine bolts complying with FS FF-B-575, Grade 5.

2.03 PAINT

A. Shop Primer for Ferrous Metal: Manufacturer's or Fabricators fast-curing, lead-free, "universal" primer; selected for good resistance to normal atmospheric corrosion, for compatibility with finish paint systems and for capability to provide a sound foundation for field-applied topcoats despite prolonged exposure; complying with performance requirements of FS TT-P-645.

1. Primer selected must be compatible with finish coats of paint. Coordinate selection of metal primer with finish paint requirements specified in Section 09900.

B. Galvanizing Repair Paint: High zinc dust content paint for regalvanizing welds in galvanized steel, complying with MIL-P-21035 or SSPC-Paint-20.

2.04 FABRICATION, GENERAL

A. Workmanship:

1. Form work true to line and level with accurate angles and surfaces and straight edges. Ease exposed edges to a radius of 1/32". Form bent-metal corners to smallest radius possible without causing grain separation.

2. Weld corners and seams continuous in compliance with AWS recommendations. At exposed connections, grind exposed welds smooth and flush to match and blend with adjoining surface.

3. Form exposed connections with hairline joints flush and smooth, using concealed fasteners wherever possible. Provide Phillips flat head (countersunk) screws and bolts for exposed fasteners.

4. Coordinate type of anchorage with supporting structure. Fabricate space anchoring devices to provide adequate support for intended use.

5. Cut, reinforce, drill and tap miscellaneous metal work to receive finish hardware and similar items.

B. Galvanizing:

1. Provide a zinc coating for those items shown or specified to be galvanized, as follows:

a. ASTM A 153 for galvanizing iron and steel hardware.

b. ASTM A 123 for galvanizing rolled, pressed and forged steel shapes, plates, bars and strips 1/8" thick and heavier.

c. ASTM A 386 for galvanizing assembled steel products.

C. Fabricate joints which will be exposed to weather in a manner to exclude water or provide weep holes where water may accumulate.

D. Shop Painting:

1. Shop paint miscellaneous metal work, except members or portions of members to be embedded in concrete or masonry, surfaces and edges to be field welded, and galvanized surfaces.

2. Surface Preparation: Prepare ferrous metal surfaces to comply with minimum requirements indicated below for SSPC surface preparation specifications and environmental exposure conditions of installed metal fabrications:

a. Exteriors (SSPC Zone 1B): SSPC-SP6 "Commercial Blast Cleaning."

b. Interiors (SSPC Zone 1A): SSPC-SP3 "Power Tool Cleaning."

3. Remove oil, grease and similar contaminants in accordance with SSPC SP-1 "Solvent Cleaning."

4. Immediately after surface preparation, brush or spray on primer in accordance with manufacturer's instructions, and at a rate to provide uniform dry film thickness of 2.0 mils for each coat.

5. Apply one shop coat to fabricated metal items, except apply 2 coats of paint to surfaces inaccessible after assembly or erection. Change color of second coat to distinguish it from the first.

2.05 MISCELLANEOUS METAL FABRICATIONS

A. Ladders: Fabricate ladders for the locations shown, with dimensions, spacings, details and anchorages as shown.

1. Side rails: 1/2" x 2-1/2" flat bar with eased edges.

2. Rungs: 3/4" diameter solid structural steel bar rungs. Fit rungs in centerline of side rails, plug weld and grind smooth on outer rail faces.

3. Support each ladder at top and bottom and at intermediate points spaced not more than 5'-0" o.c. Use welded or bolted steel brackets, designed for adequate support and anchorage, and to hold ladder clear of the wall surface with a minimum of 7" clearance from wall to centerline of rungs. Extend rails 42" above top rung, and return rails to wall or structure unless other secure handholds are provided. If the adjacent structure does not extend above the

top rung, goose-neck the extended rails back to the structure to provide secure ladder access.

4. Provide non-slip surface on top of each rung, either by coating the rung with aluminum oxide granules set in epoxy resin adhesive, or by using a type of manufactured rung which is filled with aluminum oxide grout.

5. Provide ladder safety post at roof scuttles. Provide Ladder Up Safety Post as manufactured by Bilco or approved equal. Finish shall be black enamel.

6. Galvanize Ladders.

B. Ladder Safety Cages:

1. Fabricate from structural steel flat bars assembled by welding.

a. Top, Bottom and Intermediate Hoops: 5/16" x 4", located 20'-0" on center maximum.

b. Other Hoops: 5/16" x 2", located 4'-0" on center between 4" wide hoops.

c. Vertical Bars: 5/16" x 2" located 9" on center. Weld each vertical bar to each hoop.

d. Galvanize safety cages and fasteners.

C. Angle Nosings:

1. Provide nosings fabricated of structural steel shapes as shown, with mitered joints and continuously welded construction.

2. Anchors: Space anchors 6" from ends and corners and 24" o.c. otherwise.

3. Galvanizing:

a. Galvanize nosings.

D. Loose Bearing and Leveling Plates:

1. Provide plates made flat, free from warps or twists, and of required thickness and bearing area.

2. Drill plates to receive anchor bolts and for grouting.

3. Galvanize after fabrication.

E. Miscellaneous Framing and Supports:

1. Provide miscellaneous steel framing and supports which are not a part of structural steel framework, as required to complete work.

2. Fabricate miscellaneous units to sizes, shapes and profiles indicated or, if not indicated, of required dimensions to receive adjacent other work to be retained by framing. Cut, drill, and tap units to receive hardware and similar items. Fabricate from structural steel shapes, plates and steel bars of welded construction using mitered joints for field connection.

3. Equip units with integrally welded anchors for casting into concrete. Furnish inserts if units must be installed after concrete is placed.

4. Galvanizing:

   a. Galvanize exterior miscellaneous frames and supports.

F. Miscellaneous Steel Trim:

1. Provide shapes and sizes for profiles shown. Use concealed field splices wherever possible.

2. Provide cutouts, fittings and anchorages as required for coordination of assembly and installation with other work.

3. Galvanizing:

   a. Galvanize exterior miscellaneous steel trim.

G. Safety Treads:

1. SPECTRA safety treads by Wooster or approved equal.

   a. Profile: WP4J
   b. Anchors: Integral
   c. Colors: As selected by Sandia Delegated Representative.

2. Length:

   a. Steel Pan Stairs: Full length of steps less 1/8".

PART 3 - EXECUTION

3.01 GENERAL

A. Coordinate and furnish anchorages, setting drawings, diagrams, templates, instructions, and directions for installation of anchorages, such as concrete inserts, sleeves, anchor bolts and miscellaneous items having integral anchors, which are to be embedded in concrete construction. Coordinate delivery of such items to project site so as not to delay construction.

3.02 INSTALLATION

A. General:

1. Fastening to In-Place Construction: Provide anchorage devices and fasteners where necessary for securing miscellaneous metal fabrications to in-place construction; including threaded fasteners for concrete, toggle bolts, through bolts, lag bolts, wood screws and other connectors as required.

2. Cutting, Fitting and Placement: Perform cutting, drilling and fitting required for installation of miscellaneous metal fabrications. Set work accurately in location, alignment and elevation, plumb, level, true and free of rack, measured from established lines and levels. Provide temporary bracing or anchors in formwork for items which are to be built into concrete or similar construction.

3. Fit exposed connections accurately together to form tight hairline joints. Weld connections which are not to be left as exposed joints, but cannot be shop welded because of shipping size limitations. Grind exposed joints smooth and touch up shop paint coat. Do not weld, cut or abrade the surfaces of exterior units which have been hot-dip galvanized after fabrication, and are intended for bolted or screwed field connections.

4. Field Welding: Comply with AWS Code for procedures of manual shielded metal-arc welding, appearance and quality of welds made, and methods used in correcting welding work.

5. Dissimilar Metals: Where dissimilar and incompatible metals or other materials may come in contact, they shall be permanently separated by means of gaskets or other approved methods. Aluminum surfaces in contact with concrete shall have a 16 mil coating of asphalt base paint.

6. Provide guys, braces and falsework necessary for temporary support of the work.

B. Setting Loose Plates:

1. Clean concrete bearing surfaces of any bond-reducing materials, and roughen to improve bond to surfaces. Clean bottom surface of bearing plates.

2. Set loose leveling and bearing plates on wedges, or other adjustable devices. After the bearing members have been positioned and plumbed, tighten the anchor bolts. Do not remove wedges or shims, but if protruding, cut off flush with the edge of the bearing plate before packing with grout. Pack grout solidly between bearing surfaces and plates to ensure that no voids remain.

C. Touch-up Painting: Cleaning and touch-up painting of field welds, bolted connections and abraded areas of the shop paint on miscellaneous metal is specified in Specification Section 09900 of these specifications.

D. For Galvanized Surfaces: Clean field welds, bolted connections and abraded areas and apply 2 coats of galvanizing repair paint.

END OF SECTION

SECTION 05510

METAL STAIRS

PART 1 - GENERAL

1.01 RELATED DOCUMENTS

A. Drawings and general provisions of Contract, including General and Supplementary Conditions and Division-1 Specification Sections, apply to work of this section.

1.02 DESCRIPTION

A. The extent of the steel stair systems work is shown on the drawings, which includes all items fabricated from iron and steel shapes, plates, bars, strips, tubes, pipes and castings for the stair systems which are not a part of other metal systems in other sections of these specifications.

1.03 RELATED WORK SPECIFIED ELSEWHERE

A. Specification Section 05500, "Metal Fabrications" applies to the work of this section.

1.04 QUALITY ASSURANCE

A. Field Measurements: Take field measurements prior to preparation of shop drawings and fabrication, when possible. Do not delay job progress; allow for trimming and fitting whenever taking field measurements before fabrication might delay work.

B. Shop Assembly: Preassemble items in shop to greatest extent possible to minimize field splicing and assembly. Disassemble units as necessary for shipping and handling limitations. Clearly mark units for reassembly and coordinate installation.

1.05 SUBMITTALS

A. Submit shop drawings for fabrication and erection of metal stairs. Include plans, elevations, and details of sections and connections. Show anchorage and accessory items. Provide templates of anchor and bolt installation.

1.06 PRODUCT DELIVERY, STORAGE AND HANDLING

A. Materials shall be delivered to the site in a dry and undamaged condition, stored out of contact with the ground, and under a watertight covering, permitting good air circulation. Primer touch-up paint shall be used wherever necessary to prevent formation of rust on ferrous metal items.

PART 2 - PRODUCTS

2.01 MATERIALS

A. Steel Plates, Shapes and Bars: ASTM A 36.

B. Steel Plates to be Bent or Cold-Formed: ASTM A 283, Grade C.

C. Steel Tubing: (Hot-formed, welded or seamless), ASTM A 501.

D. Cold-Finished Steel Bars: ASTM A 108, grade as selected by fabricator.

E. Hot-Rolled Carbon Steel Sheets and Strips: ASTM A 570.

F. Cold-Rolled Carbon Steel Sheets: ASTM A 366.

G. Galvanized Carbon Steel Sheets: ASTM A 446, Grade A, with ASTM A 525, G90 zinc coating.

H. Steel Pipe: ASTM A 53; Grade A; Schedule 40; black finish unless galvanizing indicated.

I. Brackets, Flanges, and Anchors: Cast or formed metal of the same type material and finish as supported rails, unless otherwise indicated.

J. Steel Finish: Shop prime paint, except where galvanized finish indicated.

K. Nonshrink Nonferrous Grout: CE CRD-C 621-81.

2.02 STEEL FRAMED STAIRS

A. General:

1. Use welding for joining pieces together unless detailed otherwise. Fabricate units so that bolts and other fastenings do not appear on finish surfaces. Make connections between parts lightproof tight. Provide continuous welds, ground smooth where exposed.

2. Construct stair units to conform to sizes and arrangements as shown. Provide metal framing, hangers, columns, railings, newels, balusters, struts, clips, brackets, bearing plates and other components for the support of stairs and platforms. Erect stair work to line, plumb, square, and true with runs registering level with floor and platform levels.

3. Provide brackets and bearing surfaces as detailed and as required to anchor and contain the stairs on the supporting structure.

4. Exterior stairs shall be constructed of hot-dip galvanized components.

B. Stair Framing:

1. Fabricate stringers of structural steel channels. Provide closures for exposed ends of stringers.

2. Construct platforms of structural steel channel headers and miscellaneous framing members, as detailed. Weld headers to stringers and newels. Weld framing members to stringers and headers.

C. Metal Pan Units:

1. Form metal pans of 12 gauge galvanized structural steel. Shape pans to conform to the configuration shown.

2. Construct riser and subtread metal pans with steel angle supporting brackets, of size shown, welded to stringers. Secure metal pans to brackets with rivets or welds. Provide platforms of the same metal and gauge as specified for pans, unless otherwise indicated.

3. Secure subplatform metal pans to platform frames with welds.

D. Floor Grating Treads and Platforms:

1. Comply with NAAMM "Metal Bar Grating Manual"; pattern, spacing, and bar sizes as shown.

2. Finish:

a. Galvanized finish

3. Fabricate grating treads with steel plate nosing on one edge and with steel angle or steel plate carrier at each end for string connections. Secure treads to stringers with bolts.

4. Fabricate grating platforms, with nosing matching that on grating treads, at each landing. Provide toeplates at open-sided edges of floor grating to platform framing members.

E. Safety Treads: Refer to Specification Section 05500.

F. Stair Railings and Handrails: Refer to Specification Section 05520.

PART 3 - EXECUTION

3.01 INSTALLATION

A. Refer to Specification Section 05500 for general installation requirements. Install steel stair units as specified and in accordance with final shop drawings and manufacturer's instructions.

END OF SECTION

SECTION 05520

HANDRAILS AND RAILINGS

PART 1 - GENERAL

1.01 RELATED DOCUMENTS

A. Drawings and general provisions of Contract, including General and Supplementary Conditions and Division-1 Specification Sections, apply to work of this section.

1.02 DESCRIPTION

A. Steel handrails and railings.

1.03 SYSTEM PERFORMANCES

A. Structural Performance of Handrails and Railing Systems: Design, engineer, fabricate, and install handrails and railing systems to withstand the following structural loads without exceeding the allowable design working stress of the materials for handrails, railing system, anchors, and connections. Apply each load to produce the maximum stress in each of the respective components comprising handrails and railing systems.

1. Top Rail of Guardrail Systems: Capable of withstanding the following loads applied as indicated:

a. Concentrated load of 300 lbf applied at any point nonconcurrently, vertical downward or horizontally.

b. Uniform load of 100 lbf per linear ft. applied nonconcurrently, vertically downward or horizontally.

c. Concentrated and uniform loads above need not be assumed to act concurrently.

2. Handrails Not Serving as Top Rails: Capable of withstanding the following loads applied as indicated:

a. Concentrated load of 200 lbf applied at any point nonconcurrently, vertically downward or horizontally.

b. Uniform load of 50 lbf per linear foot applied nonconcurrently, vertically downward or horizontally.

c. Concentrated and uniform loads above need not be assumed to act concurrently.

3. Infill Area of Guardrail Systems: Capable of withstanding a horizontal concentrated load of 200 lbf applied to one sq. ft. at any point in the system including panels, intermediate rails balusters, or other elements composing the infill area.

a. Above load need not be assumed to act concurrently with uniform horizontal loads on top rails of railing systems in determining stress on guard.

1.04 SUBMITTALS

A. Submit manufacturer's product specifications and installation instructions for products and processes used in handrails and railings, including finishes and grout.

B. Submit shop drawings for fabrication and erection of handrails and railings. Include plans, elevations and details of fittings, connections, and anchorages to other work. Provide templates for anchors and bolt installation by others.

1.05 QUALITY ASSURANCE

A. Specification Section 05500 applies to the work of this section.

PART 2 - PRODUCTS

2.01 MATERIALS

A. Steel:

1. Tubing: Cold formed, ASTM A 500; or hot rolled, ASTM A 501.

2. Steel Plates, Shapes and Bars: ASTM A 36.

3. Gray Iron Castings: ASTM A 48, Class 30.

4. Malleable Iron Castings: ASTM A 47, grade as selected by fabricator.

B. Anchors and Inserts: Provide anchors of proper type, size, and material for type of loading and installation condition shown, as recommended by manufacturer, unless otherwise indicated. Use nonferrous metal or hot-dipped galvanized anchors and inserts for exterior locations and elsewhere as required for corrosion resistance. Use toothed steel or lead expansion bolt devices for drilled-in-place anchors. Furnish inserts, as required, to be set into concrete or masonry work.

C. Primer Paint for Ferrous Metals: Manufacturer's standard rust-inhibiting primer complying with applicable Federal requirements governing application and service exposure; compatible with finish coats of paint. Coordinate selection of metal primer with finish paint requirements specified in Division 9.

D. Galvanizing Repair Paint: High zinc dust content paint for regalvanizing welds in galvanized steel, complying with Military Specification MIL-P-21035 (Ships).

2.02 FABRICATION

A. General: Fabricate handrails and railings to design, dimensions and details indicated. Provide handrail and railing member in sizes and profiles indicated, with supporting posts and brackets of size and spacing shown, but not less than required to support the design loadings indicated.

B. Welded Steel System:

1. Welded Connections: Interconnect steel tube and bar handrail and railing members by welding. Weld corners and seams continuously and in accordance with AWS recommendations. Grind exposed welds smooth and flush to match and blend with adjoining surfaces.

C. Form bends by use of prefabricated elbow fittings and radius bends of radiuses indicated, except where configuration indicated requires bending of railing members.

D. Form simple and compound curves by bending members in jigs to produce uniform curvature for each repetitive configuration required; maintain profile of member throughout entire bend without buckling, twisting or otherwise deforming exposed surfaces of handrail and railing components.

E. For handrails and railings exposed to exterior or to moisture from condensation or other sources, provide weepholes or other means for evacuation of entrapped water in hollow sections of railing members.

F. Provide wall returns at ends of wall mounted handrails, except where otherwise indicated.

G. Close exposed ends of handrail and railing members by use of manufacturer's standard prefabricated end fittings.

H. Toe Boards: Provide toe boards at railings around openings and at edge of open-sided floors and platforms. Fabricate to dimensions and details shown, or if not shown, use manufacturer's standard section to provide toe boards 4" high.

I. Brackets, Flanges, Fittings and Anchors: Provide manufacturer's standard wall brackets, flanges, miscellaneous fittings and anchors for interconnection of handrail and railing members to other work, unless otherwise indicated. Furnish inserts and other anchorage devices for connecting handrails and railings to concrete or masonry work. Fabricate and space anchorage devices as indicated and as required to provide adequate support. Coordinate anchorage devices with supporting structure.

2.03 METAL FINISHES

A. General:

1. Comply with NAAMM "Metal Finishes Manual" for recommendations and designations of finishes, except as otherwise indicated.

B. Galvanizing:

1. Provide a zinc coating for those items indicated to be galvanized, as follows:

a. ASTM A 153 for galvanizing iron and steel hardware.

b. ASTM A 123 for galvanizing products fabricated from rolled, pressed and forged steel shapes, plates, bars and strip 1/8" thick and heavier.

c. ASTM A 386 for galvanizing assembled steel products.

2. Items to be galvanized:

a. Galvanize exterior railings including pipe, fittings, brackets, fasteners, and other ferrous metal components. Provide black steel pipe for interior railings.

b. Shop prime paint black steel pipe.

C. Ferrous Metal Paint Finish:

1. Preparation: Clean surfaces of dirt, grease and loose rust or mill scale, including items fabricated from galvanized steel, if any, followed by a conversion coating of type suited to organic coating applied over it.

2. Factory Primed Finish: Apply air-dried primer immediately following cleaning and pretreatment, to provide a minimum dry film thickness of 2.0 mils. per applied coat, to surfaces which will be exposed after assembly and installation, and to concealed, nongalvanized surfaces.

PART 3 - EXECUTION

3.01 PREPARATION

A. Coordinate setting drawings, diagrams, templates, instructions, and directions for installation of anchorages, such as sleeves, concrete inserts, anchor bolts and miscellaneous items having integral anchors, which are to be embedded in concrete as masonry construction. Coordinate delivery of such items to project site.

B. Take field measurements prior to preparation of shop drawings and fabrication, where possible. Do not delay job progress; allow for adjustments during installation where taking field measurements before fabrication might delay work.

3.02 INSTALLATION

A. General:

1. Fit exposed connections accurately together to form tight hairline joints.

2. Perform cutting, drilling and fitting required for installation of handrails and railings. Set work accurately in location, alignment and elevation, plumb, level, true and free of rack, measured from established lines and levels. Do not weld, cut or abrade surfaces of handrail or railing components which have been coated or finished after fabrication, and are intended for field connection by mechanical means without further cutting or fitting.

3. Field Welding: Comply with AWS Code for procedures of manual, shielded metal-arc welding; for appearance and quality of welds made; and for methods used in correcting welding work. Weld connections which are not be left as exposed joints, but cannot be shop welded because of shipping size limitations. Grind exposed joints smooth and touch up shop paint coat.

4. Adjust handrails and railings prior to anchoring to ensure matching alignment at abutting joints. Space posts at interval indicated, or if not indicated, as required by design loadings.

B. Anchoring Posts:

1. Anchor posts to metal surfaces with manufacturer's standard fittings designed for this purpose unless otherwise indicated.

C. Railing Connections:

1. Permanently connect railing components by welding using manufacturer's standard fittings.

D. Anchoring Railing Ends:

1. Anchor railing ends to metal surfaces by welding using manufacturer's standard fittings, unless otherwise indicated.

3.03 ADJUST AND CLEAN

A. Protect finishes of railings and handrails from damage during construction period by use of temporary protective coverings approved by railing manufacturer. Remove protective covering at project completion. Restore finishes damaged during installation and construction period so that no evidence remains of correction work. Return items which cannot be refinished in the field to the shop; make required alterations, and refinish entire unit, or provide new units as required.

B. Touch-Up Painting: Immediately after erection, clean field welds, bolted connections, and abraded areas of shop paint, and paint exposed areas with same material.

C. For galvanized surfaces: Clean field welds, bolted connections and abraded areas and apply 2 coats of galvanizing repair paint.

END OF SECTION

SECTION 05530

FLOOR PLATE AND GRATING

PART 1 - GENERAL

1.01 RELATED DOCUMENTS

A. Drawings and general provisions of Contract, including General and Supplementary Conditions and Division-1 Specification Sections, apply to work of this section.

1.02 DESCRIPTION

A. The types of work in this section include the following:

1. Steel floor plates

2. Aluminum bar grating

1.03 QUALITY ASSURANCE

A. Field Measurements: Take field measurements prior to preparation of shop drawings and fabrication.

B. Floor Plate Standard: FS QQ-F-461.

C. Metal Bar Grating Standard: Standard Specifications for Metal Bar Grating and Metal Bar Grating Treads as published in NAAMM Metal Bar Grating Manual.

1.04 SUBMITTALS

A. Submit manufacturer's product information and installation instructions for each type of product indicated.

B. Submit shop drawings for fabrication and erection of work indicated in this section. Include plans, sections, edge conditions, materials, finishes, panel sizes, anchorage details, fasteners, location and size of penetrations, removable panels and special conditions.

PART 2 - PRODUCTS

2.01 MATERIALS

A. Steel Floor Plates: ASTM A 36; except plates to be bent or cold-formed, ASTM A 283, of grade indicated, or if not indicated, as required for design loading.

B. Aluminum Bar Gratings: ASTM B 221, alloy 6061-T6 or 6063-T6 for bearing bars; alloy 6061-T1 for cross bars.

C. Fasteners: Use fasteners made of the same basic metal as fastened metal except use galvanized fasteners complying with ASTM A 153 for exterior aluminum units. Do not use metals which are corrosive or incompatible with metals joined. Provide fasteners of proper type and size required for application indicated.

2.02 FABRICATION

A. General: Use materials of form, type, material, sizes, spacing and arrangement indicated. Work to dimensions shown or accepted on final shop drawings, using proven details of fabrication and support.

B. Floor Plate: Provide galvanized steel floor plate as indicated, including galvanized steel angle stiffeners and fixed and removable sections. Sections shall be approximately two feet long and weigh not more than 50 pounds.

1. Raised Pattern Floor Plate: Provide floor plate of class and pattern indicated, or, if not indicated, as selected from manufacturer's standard patterns.

    a. Class 1

2. Provide 2 flush lifting handles, one at each end of plate sections indicated as removable.

3. Pattern:

    a. No. 10

C. Metal Bar Grating: Provide bar gratings of types, surfaces and finish indicated complying with referenced standard, where applicable.

1. Type: Welded

    a. Cross Bars: Rectangular.

    b. Provide true alignment and equal spacing of rectangular cross bars by notching bearing bars prior to welding.

2. Type: Pressure-locked.

    a. Bearing Bars: Rectangular.

3. Traffic Surface: Plain.

4. Aluminum Finish: Mill, as fabricated.

D Provide removable grating sections. Include clips and fasteners of type indicated, or if not indicated, as recommended by manufacturer, for attachment to support.

1. Provide not less than 4 stainless steel saddle clips for each section, with each clip designed and fabricated to fit over 2 bearing bars.

    a. Furnish threaded studs with nuts and washers for each clip required.

E. Cut, drill and fit grating sections in shop to maximum extent possible.

PART 3 - EXECUTION

3.01 INSTALLATION

A. General:

1. Provide anchorage devices and fasteners where required for securing work to supporting members and prepared openings.

2. Perform field welding, where required, to comply with AWS procedures.

3. Set work accurately in location, alignment and elevation, plumb, level, true and free of rack. Perform additional cutting and drilling, if required, to make work of this section fit to adjacent work and around existing penetrations.

B. Bar Gratings:

1. Comply with recommendations of NAAMM Metal Bar Grating Manual for installation of gratings, including installation clearances and standard anchoring details.

2. Secure removable units to supporting members with type and size clips and fasteners indicated, or if not indicated as recommended by grating manufacturer for type of installation conditions shown.

3.02 ADJUST AND CLEAN

A. For galvanized surfaces, clean field welds, and abraded areas and apply 2 coats of galvanizing repair paint.

END OF SECTION

SECTION 05801

INTERIOR EXPANSION JOINTS

PART 1 - GENERAL

1.01 RELATED DOCUMENTS

A. Drawings and general provisions of Contract, including General and Supplementary Conditions and Division-1 Specification Sections, apply to work of this section.

1.02 DESCRIPTION

A. The extent of interior expansion joint assemblies is shown on the drawings, including notes and details indicating style and types of installation.

B. The types of prefabricated metal expansion joint assemblies include the following:

1. Floor expansion joint assemblies.

2. Wall expansion joint assemblies.

3. Ceiling expansion joint assemblies.

1.03 QUALITY ASSURANCE

A. In addition to the requirements of these specifications, comply with manufacturer's instructions and recommendations for all phases of the work, including preparation of substrate, applying materials, and protection of installed units.

B. Provide prefabricated joint assemblies manufactured by one of the following:

1. Acme Highway Products Corporation
2. Architectural Art Manufacturing
3. Balco, Inc.
4. Construction Specialties, Inc.
5. Metalines, Inc.
6. MM Systems Corporation
7. Watson Bowman

1.04 SUBMITTALS

A. Submit manufacturer's product specifications, installation instructions and general recommendations for each type of expansion joint cover indicated.

B. Submit shop drawings showing full extent of expansion joint covers; include large scale details indicating profiles of each type of expansion joint cover, splice joints between sections, joinery with other types, special end conditions, anchorages, fasteners and relationship to adjoining work and finishes. Include description of materials and finishes.

C. Submit three (3) sets of samples for each type of metal finish indicated. Prepare samples on metal of same thickness and alloy to be used in work. Where normal color and texture variations are to be expected, include two (2) or more units in each set of samples showing limits of such variations.

PART 2 - PRODUCTS

2.01 MATERIALS

A. Aluminum: ASTM B 221 alloy 6063-T5 for extrusions; ASTM B 209, alloy 6061-T6, sheet and plate.

B. Elastomeric Sealant: Manufacturer’s standard 2-part polyurethane-based elastomeric sealant complying with FS TT-S-00227, Class A, factory-formed and bonded to metal anchor members; in color indicated, or, if not indicated, as selected by Sandia’s Delegated Representative from manufacturer’s standard colors.

C. Accessories: Manufacturer’s standard anchors, fasteners, set screws, spacers, flexible seal and filler materials, adhesive and other accessories necessary for complete installations.

2.02 FABRICATION

A. General: Provide expansion joint covers of design, basic profile, materials, and operation indicated. Select units comparable to those indicated or required to suit joint size and to absorb variations in adjacent surfaces and structural movement. Furnish units in longest practicable lengths to minimize number of joints. Provide hairline mitered corners where joint changes directions or abuts other materials. Include closure pieces, tee-joints, corners, curbs, cross-connections, and other accessories, as required to provide continuous joint cover assemblies.

B. Interior Elastomeric Cover Joint Assemblies: Provide continuous cover joint assemblies consisting of elastomer sealant factory-bonded to aluminum extrusions of profile indicated or required to suit types of installation conditions shown. Provide extrusions for floor joints with means for embedment or anchorage to

concrete without use of exposed fasteners and which will result in exposed surfaces of sealant and aluminum anchorage members finishing flush with adjacent finished floor surface.

C. Wall and Ceiling Joint Cover Assemblies: Provide concealed, continuously anchored members fastened to wall or ceiling only on one side of joint. Extend cover to lap each side of joint and to permit free movement. Attach cover to anchor member, with cover in close contact with adjacent finish surfaces.

D. Provide manufacturer's continuous standard flexible vinyl moisture seals for joint covers on interior of exterior walls at other locations indicated.

2.03 METAL FINISHES

A. General: Comply with NAAMM "Metal Finishes Manual" for finish designations and application recommendations, except as otherwise indicated. Apply finishes in factory after products are fabricated. Protect finishes on exposed surfaces with protective covering, prior to shipment.

B. Aluminum Finishes:

1. Clear Anodized Finish: AA-C22A31 (medium matte etched finish with 0.4 mil. mimimum thick anodic coating).

C. Factory-Primed Concealed Surfaces: Portect concealed metal surfaces which will be in contact with concrete and masonry surfaces when installed by applying a shop-coat of manufacturer's standard primer to contact surfaces; provide minimum dry film thickness of 2.0 mils.

PART 3 - EXECUTION

3.01 INSTALLATION

A. Fastening to In-Place Construction: Provide anchorage devices and fasteners where necessary for securing expansion joint assemblies to in-place construction, including threaded fasteners with drilled-in expansion shields for masonry and concrete where anchoring members are not embedded in concrete. Provide fasteners of proper metal, type, and size to suit type of construction indicated and provide for secure attachment of expansion joint covers.

B. Cutting, Fitting and Placement: Perform cutting, drilling and fitting required for installation of expansion joint assemblies. Install joint cover assemblies in true alignment and proper relationship to expansion joints and adjoining finished surfaces, measured from established lines and levels. Set floor covers at elevations to be flush with adjacent finished floor materials. Locate joint

assemblies in continuous contact with adjacent surfaces. Securely attach in place with all required accessories. Locate anchors at interval recommended by manufacturer, but not less than 3" from each end and 24" on center.

C. Joinery and Continuity: Maintain continuity of expansion joint covers with end joints held to a minimum and metal members aligned mechanically using splice joints. Cut and fit ends to produce hairline joints.

D. Installation of Elastomeric Cover Joint Assemblies: Seal but joints within continuing runs in accordance with manufacturer's directions to provide a watertight installation.

3.02 CLEANING AND PROTECTION

A. Do not remove strippable protective material until finish work in adjacent areas is complete. When protective material is removed, clean exposed metal surfaces to comply with manufacturer's instructions.

END OF SECTION

SECTION 05802

EXTERIOR EXPANSION JOINTS

PART 1 - GENERAL

1.01 RELATED DOCUMENTS

A. Drawings and general provisions of Contract, including General and Supplementary Conditions and Division-1 Specification Sections, apply to work of this section.

1.02 DESCRIPTION

A. The extent of interior expansion joint assemblies is shown on the drawings, including notes and details indicating style and types of installation.

B. The types of prefabricated metal expansion joint assemblies include the following:

1. Seismic joint assemblies

1.03 QUALITY ASSURANCE

A. In addition to the requirements of these specifications, comply with manufacturer's instructions and recommendations for all phases of the work, including preparation of substrate, applying materials, and protection of installed units.

B. Provide prefabricated joint assemblies manufactured by one of the following:

1. Construction Specialties, Inc.
2. MM Systems Corporation
3. D.S. Brown Company

1.04 SUBMITTALS

A. Submit manufacturer's product specifications, installation instructions and general recommendations for each type of expansion joint cover indicated.

B. Submit shop drawings showing full extent of expansion joint covers; include large scale details indicating profiles of each type of expansion joint cover, splice joints between sections, joinery with other types, special end conditions, anchorages,

fasteners and relationship to adjoining work and finishes. Include description of materials and finishes.

C. Submit three (3) sets of samples for each type of metal finish indicated. Prepare samples on metal of same thickness and alloy to be used in work. Where normal color and texture variations are to be expected, include two (2) or more units in each set of samples showing limits of such variations.

PART 2 - PRODUCTS

2.01 MATERIALS

A. Aluminum: ASTM B 221 alloy 6063-T5 for extrusions; ASTM B 209, alloy 6061-T6, sheet and plate.

B. Preformed Polychloroprere Strip Seals: ASTM D 2628 modified to omit recovery test, in manufacturer's standard color.

C. Accessories: Manufacturer's standard anchors, fasteners, set screws, spacers, flexible seal and filler materials, adhesive and other accessories necessary for complete installations.

2.02 FABRICATION

A. General: Provide joint assemblies of design, basic profile, materials, and operation indicated. Select units comparable to those indicated or required to suit joint size and to absorb variations in adjacent surfaces and structural movement. Furnish units in longest practicable lengths to minimize number of joints. Provide hairline mitered corners where joint changes directions or abuts other materials. Include closure pieces, tee-joints, corners, curbs, cross-connections, and other accessories, as required to provide continuous joint cover assemblies.

B. Provide manufacturer's continuous standard flexible vinyl moisture seals for joint covers on interior walls at other locations indicated

2.03 SCHEDULE

A. Products listed by name are intended to describe profile and type of joint cover assemblies needed and are not intended to exclude the products of the other manufacturer's listed in paragraph 1.03 of this section.

1. Seismic Joint Cover Assembly:

a. Wall Assembly:

(1) Vertical Joint System, D.S. Brown Company.
(2) SF, Constructin Specialties.
(3) VSS, MM Systems

b. Roof Assembly:

(1) RSS, MM Systems
(2) Roof Joint Systems, D.S. Brown Company
(3) SRJ, Construction Specialties.

2.04 METAL FINISHES

A. General: Comply with NAAMM "Metal Finishes Manual" for finish designations and application recommendations, except as otherwise indicated. Apply finishes in factory after products are fabricated. Protect finishes on exposed surfaces with protective covering, prior to shipment.

B. Aluminum Finishes:

1. Clear Anodized Finish: AA-C22A31 (medium matte etched finish with 0.4 mil. mimimum thick anodic coating).

C. Factory-Primed Concealed Surfaces: Portect concealed metal surfaces which will be in contact with concrete and masonry surfaces when installed by applying a shop-coat of manufacturer's standard primer to contact surfaces; provide minimum dry film thickness of 2.0 mils.

PART 3 - EXECUTION

3.01 INSTALLATION

A. Fastening to In-Place Construction: Provide anchorage devices and fasteners where necessary for securing expansion joint assemblies to in-place construction, including threaded fasteners with drilled-in expansion shields for masonry and concrete where anchoring members are not embedded in concrete. Provide fasteners of proper metal, type, and size to suit type of construction indicated and provide for secure attachment of expansion joint covers.

B. Cutting, Fitting and Placement: Perform cutting, drilling and fitting required for installation of expansion joint assemblies. Install joint cover assemblies in true alignment and proper relationship to expansion joints and adjoining finished surfaces, measured from established lines and levels. Set floor covers at elevations to be flush with adjacent finished floor materials. Locate joint assemblies in continuous contact with adjacent surfaces. Securely attach in place

with all required accessories. Locate anchors at interval recommended by manufacturer, but not less than 3” from each end and 24” on center.

C. Joinery and Continuity: Maintain continuity of expansion joint covers with end joints held to a minimum and metal members aligned mechanically using splice joints. Cut and fit ends to produce hairline joints.

D. Installation of Strip Seals: Install strip seals to comply with manufacturer’s instructions and with minimum number of end joints. For straight sections provide strip seals in continuous lengths; adhesively splice joint at changes in directions to provide watertight joint using manufacturer’s recommended adhesives and procedures. Weld and grind smooth all splice joints in aluminum extrusions except surfaces contacting strip seal. Apply manufacturer’s approved lubricant-adhesive to both joint interfaces priot to inserting strip seal

3.02 CLEANING AND PROTECTION

A. Do not remove strippable protective material until finish work in adjacent areas is complete. When protective material is removed, clean exposed metal surfaces to comply with manufacturer’s instructions.

END OF SECTION

SECTION 07160

BITUMINOUS DAMPPROOFING

PART 1 - GENERAL

1.01 RELATED DOCUMENTS

A. Drawings and general provisions of Contract, including General and supplementary Conditions and Division-1 Specification Sections, apply to work of this section.

1.02 DESCRIPTION

A. Dampproofing joints in gypsum sheathing.

1.03 QUALITY ASSURANCE

A. Obtain each type of dampproofing material from one manufacturer.

1.04 SUBMITTALS

A. Submit manufacturer's product data and installation instructions for type of dampproofing material required. Include data substantiating that materials comply with specified requirements.

1.05 JOB CONDITIONS

A. Do not apply dampproofing when ambient temperature is 40 degrees F. or less and falling. Do not apply dampproofing to substrate not complying with manufacturer's recommendations.

PART 2 - PRODUCTS

2.01 MATERIALS

A. Sheathing Dampproofing:

1. Fabric reinforced, rubberized asphalt joint tape. Total thickness 34 mils.

a. Polyguard No. 600 joint tape or approved equal.

PART 3 - EXECUTION

3.01 INSTALLATION

A. General:

1. Clean substrate of dirt, oil, loose materials and other substances which interfere with bond and performance of dampproofing.

B. Installation on Gypsum Sheathing:

1. Install joint tape to horizontal joints first, followed by the vertical joints. Do not apply below 40 degrees F.

END OF SECTION

SECTION 07210

BUILDING INSULATION

PART 1 - GENERAL

1.01 RELATED DOCUMENTS

A. Drawings and general provisions of Contract, including General and Supplementary Conditions and Division-1 Specification sections, apply to work of this section.

1.02 DESCRIPTION

A. The application of building insulation includes the following:

1. Concealed board type

2. Concealed blanket type

1.03 QUALITY ASSURANCE

A. Comply with fire-resistance and flammability ratings as specified.

B. References to ASTM and Federal standards shall mean the latest edition of that standard.

1.04 SUBMITTALS

A. Submit manufacturer's specifications and installation instructions for each type of insulation required. Include data substantiating that materials comply with specified requirements.

1.05 PRODUCT HANDLING

A. Do not allow insulation materials to become wet or soiled. Comply with manufacturer's recommendations for handling storage and protection during installation.

1. Protect plastic insulation from exposure to sunlight.

B. Do not deliver plastic insulation materials to the project site ahead of installation time. Protect at all times against ignition. Complete installation and concealment of plastic materials as rapidly as possible in each area of work.

PART 2 - PRODUCTS

2.01 MATERIALS

A. Rigid Glass Fiber Board:

1. Comply with ASTM 612, Class 1.

2. Fire Hazard Classification: 25/50 per ASTM E-84.

3. Facing: Foil faced

4. R-Value: 13.0

B. Rigid Wall Insulation:

1. Polyisocyanurate complying with Fed. Spec. HH-I-1972/1, Class 2.

2. Flame Spread: UL listed less than 25.

3. Thickness: 1-1/2"

4. Facers: Foil.

5. Minimum Aged R-Value: 10.00

C. Glass Fiber Batt Insulation:

1. Comply with ASTM C 665.

2. Density: 0.6 pcf.

3. Facing:Type III, foil faced

4. Thickness: 3-1/2" at 3-5/8" studs and 6-1/4" at 6" studs.

5. R-Value: 11.00 and 19.0.

D. Safing Insulation:

1. Provide unfaced mineral fiber complying with ASTM C 665, Type I.

E. Miscellaneous Materials:

1. Adhesive: Type recommended by insulation manufacturer and complying with fire-resistance requirements.

2. Mechanical Anchors: Impaling fasteners of type and size recommended by insulation manufacturer for particular application and type of substrate.

PART 3 - EXECUTION

3.01 INSTALLATION

A. Comply with manufacturer's instructions for the particular conditions of installation in each case; including method of support or anchorage to the substrate, as appropriate for each application indicated. If printed instructions are not available, or do not apply to the project conditions, consult the manufacturer's technical representative for specific recommendations before proceeding with the work.

B. Extend insulation full thickness as shown over entire surface to be insulated. Cut and fit tightly around obstructions, and fill voids with insulation.

C. Apply a single layer of insulation of the thickness indicated or the required thickness for the thermal value indicated.

D. Set vapor barrier faced units with vapor barrier to interior side of construction.

END OF SECTION

SECTION 07220

ROOF AND DECK INSULATION

PART 1 - GENERAL

1.01 RELATED DOCUMENTS

A. Drawings and general provisions of Contract, including General and Supplementary Conditions and Division-1 Specification sections, apply to work of this section.

1.02 DESCRIPTION

A. Isocyanurate board.

1.03 QUALITY ASSURANCE

A. Insulation system shall be provided by roofing membrane manufacturer and included in manufacturer's warranty as defined in Section 07510.

B. Comply with FM requirements for "Class I" metal deck construction.

C. Deliver insulation to jobsite with Factory Mutual labels on each bundle.

D. Insulation on steel deck shall have perimeter fastening to comply with FM Data Sheet I-28, Class I-60.

E. References to ASTM and Federal standards shall mean the latest edition of that standard.

1.04 SUBMITTALS

A. Submit manufacturer's product data and installation instructions for each type of insulation required. Include data substantiating that materials comply with specified requirements.

1.05 PRODUCT HANDLING

A. Protection from Deterioration: Do not allow insulation materials to become wet or soiled. Comply with manufacturer's recommendations for handling, storage and protection during installation.

1. Protect plastic insulation from exposure to sunlight.

B. Fire Hazard: Do not deliver plastic insulation materials to the project site ahead of installation time. Protect at all times against ignition. Complete installation and concealment of plastic materials as rapidly as possible in each area of work.

C. Do not overload the building structure with the storage of materials or use of installation equipment on the deck.

1.06 JOB CONDITIONS

A. Do not proceed with installation of insulation unless the materials, equipment and tradesmen required for the installation of the roofing membrane over the insulation are at the project site and scheduled to follow with membrane work immediately (same day) behind the insulation work. Do not install more insulation each day than can be covered with membrane before the end of that working day and before the start of inclement weather.

B. Remove and replace insulation work which has become wet, damaged or deteriorated before proceeding with other work.

PART 2 - PRODUCTS

2.01 MATERIALS

A. Isocyanurate Board:

1. Noncomposite insulation board approved for FM Class I insulated steel deck construction.

2. Facers: Glass fiber facers integrally bonded to core.

3. Core: Isocyanurate foam, reinforced by glass fibers.

4. Properties:

	Value	Test
a. Dimensional Stability	Under 2%	7 days @ 158 F. 95-100 RH
b. Foam Core		

Density	Nominal 2 lbs/cu. ft	-------
c. Moisture Vapor Transmission:	1.0 perms	C-355-62T
d. Compressive Strength	20 psi min	D-1621

5. Aged R-Value: 20

B. Miscellaneous Materials:

1. Mechanical anchors for attachment to steel deck: Type and size recommended by the roofing manufacturer and complying with fire and insurance rating requirements.

   a. Fasteners shall be solid stainless steel.

2. Provide tapered insulation or edge strips as necessary to achieve slopes shown on drawings.

3. Steep Asphalt: ASTM D-312, Type III.

4. Concrete Primer: ASTM D-41.

PART 3 - EXECUTION

3.01 INSTALLATION GENERAL

A. Comply with manufacturer's instructions for the particular conditions of installation in each case, including treatment (if any) at edges of each insulated area. If printed instructions are not available or do not apply to the project conditions, consult the manufacturer's technical representative for specific recommendations before proceeding with the work.

B. Extend insulation full thickness as shown over entire surface to be insulated. Cut and fit tightly around obstructions, and fill voids with insulation and mastic.

C. Handle and apply insulation in a manner that will not affect its structural or insulating properties.

D. Joints of insulation shall be tightly butted without deforming insulation.

E. Miter edges of insulation at ridges and elsewhere to prevent open joints or irregular surfaces.

F. Install no more insulation than can be covered at the end of each day and protected from sudden adverse weather with the roofing system. Installation of insulation and roofing shall be terminated on the downhill side of the roof slope.

3.02 INSTALLATION OF ISOCYANURATE OVER STEEL ROOF DECK

A Apply the units of isocyanurate insulation with long joints continuous and perpendicular to the slope of deck. End joints shall be staggered between rows.

B. Perimeter shall be secured with mechanical fasteners in quantity and pattern as recommended by roofing manufacturer to comply with specified Factory Mutual requirements.

C. Secure the remainder of the entire field of insulation with mechanical fasteners using a minimum of six fasteners per board.

3.03 PROTECTION

A. Equipment used over insulation or roof deck shall be of such a type and weight so as not to damage, crush, or dent the insulation or roof deck.

B. Do not permit construction traffic over completed insulation work, except as required for roofing and waterproofing.

3.04 PERFORMANCE

A. It is required that roof insulation work withstand the uplift forces of wind, as defined by the roofing warranty. Failures of the insulation work in bond or anchorage to the substrate, or between courses of insulation, or within the insulation, will be considered failures of materials or workmanship.

END OF SECTION

SECTION 07241

EXTERIOR INSULATION AND FINISH SYSTEM

PART 1 - GENERAL

1.01 RELATED DOCUMENTS

A. Drawings and general provisions of Contract, including General and Supplementary Conditions and Division-1 Specification sections, apply to work of this section.

1.02 DESCRIPTION

A. The system consists of:

1. Expanded polystyrene insulation board adhered to a substrate of gypsum sheathing.

2. Woven glass fiber fabric embedded in plastic veneer base over insulation board.

3. Finish plastic coating with integral color and texture.

B. Construction System:

1. Field applied system.

1.03 QUALITY ASSURANCE

A. Application of the system shall be by an applicator approved by the manufacturer.

B. Substrate systems shall be designed to resist a wind load of 30 psf, with a deflection not to exceed L/240.

C. Finishes shall be installed in sequential batches.

1.04 SUBMITTALS

A. Submit copy of current approved applicator certificate.

B. Submit 2'-0" x 4'-0" sample of selected color and texture to be used.

C. Submit manufacturer's product data and installation instructions.

1.05 PRODUCT DELIVERY, STORAGE AND HANDLING

A. Deliver products in original unopened packaging with legible manufacturer's identification.

B. Store products in a cool, dry place out of direct sunlight protected from the elements and from damage.

1. Finish and adhesive shall be stored at a temperature of not less than 40 degrees F.

1.06 JOB CONDITIONS

A. General:

1. Protect surrounding areas and surfaces to preclude damage during application of the system.

2. Protect finished work when stopping for the day or when completing an area in order that water will not penetrate behind the system.

B. Field applied system:

1. Application of the system shall be in ambient temperatures above 40 degrees F and rising, and on dry surfaces.

PART 2 - PRODUCTS

2.01 MATERIAL

A. Adhesive as manufactured by DRYVIT System, Inc., Senergy, Inc., ISPO, Inc., R-Wall or approved equal.

B. Portland Cement - ASTM C-150, Type I, fresh and free of lumps.

C. Insulation Board: Expanded polystyrene, less than 25 flame spread as per ASTM E-84 or UL-723. Thickness shall be 1 inch.

D. Reinforcing fabric:

1. Standard glass fiber mesh supplied by system manufacturer.

E. Finish: Acrylic based, factory-mixed coating manufactured by DRYVIT System, Inc., Senergy, Inc., ISPO, Inc., R-Wall or approved equal.

F. Color & Texture: Refer color schedule, Section 09900A.

G. Water: Shall be clean and potable.

H. Sheathing: 1/2", T&G, water resistant gypsum core, wrapped in water resistant paper, conforming to FS SS-L-30D, Type II, Grade W, Class 2, ASTM C79.

I. Sealant:

1. Provide Tremco Dymeric with Primer #1 or Pecora Dynatrol II with Primer P75. No substitutes will be considered.

PART 3 - EXECUTION

3.01 INSTALLATION

A. Field Applied System:

1. Applying insulation board to substrate:

a. Precut insulation board as required to fit openings and projections, stagger joints and corners.

b. With a trowel apply a bead of mixed adhesive 2 inches wide by 3/8 inch thick on the entire perimeter of the board. Apply dabs of adhesive 3/8 inch thick by 4 inches in diameter approximately 8 inches on center to the interior area. A minimum of 25% adhesive area must result. An alternate method for flat substrates is to use a 3/8 inch notched trowel and apply mixed adhesive to the entire surface.

c. Apply pressure over entire surface of board to insure uniform contact and high initial grab. Abut joints tightly and insure an overall flush level surface.

(1) Any irregularity of the insulation board greater than 1/16 inch must be rasped flush.

d. Accessory items or expansion joints shall be installed and completely bedded in with mixed adhesive.

B. Applying Reinforcing Fabric:

1. Using a stainless steel trowel, apply mixed adhesive to the entire surface of the insulation board to a uniform thickness of approximately 1/16 inch.

2. Immediately place the reinforcing fabric against the wet coating, and by troweling from the center to the edges embed the fabric into the coating.

    a. Reinforcing fabric shall be continuous at corners and lapped not less than 2-1/2 inches at fabric edges.

    b. Avoid wrinkles in embedding the reinforcing fabric.

    c. Coating shall be such that the reinforcing fabric is fully embedded.

3. The coating surface shall be dry and hard before proceeding to finish application.

C. Finish:

1. Using a clean stainless steel trowel, apply a tight coat of the finish material directly to the reinforced coating.

    a. It shall be applied and leveled during the same operation to the minimum attainable thickness consistent with uniform coverage.

        (1) Finish shall be applied and textured over surface to insure a continuous operation without cold joints, scaffolding lines and similar defects.

3.02 DAMAGED PANELS

A. Replace damaged panels which cannot be satisfactorily field repaired at no additional cost to Sandia.

END OF SECTION

SECTION 07270

FIRESTOPPING

PART 1 - GENERAL

1.01 RELATED DOCUMENTS

A. Drawings and general provisions of Contract, including General and Supplementary Conditions and Division-1 Specification sections, apply to work of this section.

1.02 DESCRIPTION

A. Firestopping shall consist of furnishing and installing a material or a combination of materials to form an effective barrier against the spread of flame, smoke and gases, and to maintain the integrity of fire-rated construction. Firestopping shall be provided in the following locations:

1. Duct, conduit and pipe penetrations through fire-rated walls.

2. Cracks, voids and holes in fire rated walls.

3. Other locations specifically designated on the drawings.

1.03 QUALITY ASSURANCE

A. Firestopping materials shall consist of commercially manufactured products complying with the following minimum requirements:

1. Flame Spread: Twenty-five or less when tested in accordance with ASTM E 84.

2. Smoke Density: Fifty or less when tested in accordance with ASTM E 84.

3. Fuel Contribution: Twenty-five or less when tested in accordance with ASTM E 84.

4. Nontoxicity: Nontoxic to human beings at all stages of application and during fire conditions.

B. Materials used to seal penetrations in fire-rated assemblies shall be capable of preventing the passage of flame and hot gases sufficient to ignite cotton waste

when subjected to ASTM E 119 time-temperature conditions for a period of time at least equal to the fire resistant rating of the fire-rated assembly.

C. Firestopping materials shall be compatible with adjacent materials so that no adverse effects will occur as a result of contact with these materials.

D. Provide firestopping materials by one or all of the following manufacturers:

1. 3M Electro Products

2. Dow Corning Corporation

3. United States Gypsum

1.04 SUBMITTALS

A. Submit manufacturer's product data and installation instructions for each condition requiring firestopping. Include data substantiating that materials comply with specified requirements.

1.05 PRODUCT HANDLING

A. Do not install firestopping materials under adverse weather conditions and when temperatures are below or above manufacturer's recommended limitations for installation.

B. Materials shall be delivered in the original unopened packages or containers showing name of the manufacturer and the brand name. Materials shall be protected from damage and exposure to elements. Damaged or deteriorated materials shall be removed from the site.

PART 2 - PRODUCTS

2.01 MATERIALS

A. Mineral Fiber Curtain Wall and Safing Insulation: United States Gypsum, Thermafiber.

1. Comply with FS HH-I-521F, Type 1.

2. Curtain wall and safing insulation shall be 1 hour fire tested under simulated field conditions, and ASTM E 119 time-temperature fire exposure.

3. Thickness: Safing Insulation - 4"

4. Density: 4 PCF

5. Facing: Plain

6. Mechanical Anchors: Type and size recommended by manufacturer for particular application and type of substrate.

B. Silicone Foam Seal: Dow Corning 3-6548 Silicone RTV Foam Penetrating Seal.

1. Two-part, silicone based, room temperature vulcanizing, foamed elastomer with the following minimum properties:

a Penetration seal shall be capable of passing ASTM E 814 (UL 1479) Standard Method of Fire Tests for Through Penetration Fire Stops up to the desired fire resistance.

b. Density: 15 to 20 pcf

c. Tensile Strength: 25 pcf

d. Flame Spread: 25

C. Instumescent Sealant/Putty Seal: 3M Electro Products Division Fire Barrier Caulk CP25 and Putty 303 Penetration Seal.

1. One-part synthetic, intumescent elastomer putty and sealant with the following minimum properties:

a. Penetration seal shall be capable of passing ASTM E 814 (UL 1479) Standard Method of Fire Tests for Through Penetration Fire Stops up to the desired fire resistance.

b. Density: 12.5 lb./gal.

c. Capable of expanding up to ten (10) times when exposed to flame or heat.

d. Flame Spread: 25

D. Instumescent Sheet Seal: 3M Electro Products Division Fire Barrier Wrap/Strip F-195 Penetration Seal.

1. One-part synthetic, intumescent, inorganic, foil-faced elastomeric fire resistive sheet with the following minimum properties:

a. Penetration seal shall be capable of passing ASTM E 814 (UL 1479) Standard Method of Fire Tests for Through Penetration Fire Stops up to the desired fire resistance.

b. Capable of expanding up to ten (10) times when exposed to flame or heat.

c. Flame Spread: 25

d. Thickness:

(1) Fire Resistive Sheet - 0.250"
(2) Aluminum Foil - 0.0025"

PART 3 - EXECUTION

3.01 INSTALLATION

A. Prior to installing fireproofing material, all loose concrete, debris and heavy accumulations of scale from floor and wall penetrations shall be removed.

B. Firestopping shall be installed at locations shown or specified in accordance with manufacturers' written instructions and fire test report. Cutting and patching of construction and providing sleeves, where required, are shown in drawings or specified in other sections.

C. Filling of Voids: Firestopping material shall completely fill void spaces regardless of geometric configuration, subject to tolerances established by the manufacturer.

D. Insulated Pipes and Ducts: Insulated pipes and ducts penetrating fire-rated walls shall be insulated with materials which provide the same performance as the firestopping material. This material shall extend a minimum of 6 inches on each side of the opening. Vapor barrier of such insulation shall have a perm rating of 0.03 maximum.

E. Electrical Cables or Conduits: Firestopping at penetrations of electrical cables or conduits shall also comply with the requirements of NFPA No. 70.

END OF SECTION

SECTION 07410

PREFORMED WALL AND ROOF PANELS

PART 1 - GENERAL

1.01 RELATED DOCUMENTS

A. Drawings and general provisions of Contract, including General and Supplementary Conditions and Division-1 Specification sections, apply to work of this section.

1.02 DESCRIPTION

A. The types of panels required are:

1. Steel flush panels.

a. For exterior closure walls.

1.03 QUALITY ASSURANCE

A. Reference to ASTM standards shall mean the latest edition of those standards.

B. The names of panel manufacturers mentioned are not intended to restrict bidding but to indicate the profile of panels required.

C. The installer shall be the panel manufacturer or an experienced erection firm licensed by or acceptable to the panel manufacturer.

D. Wherever possible, take field measurements prior to completion of shop fabrication and finishing of preformed metal siding.

1.04 SUBMITTALS

A. Submit copies of manufacturer's specifications, standard detail drawings and installation instructions for preformed metal siding. Include manufacturer's certification or other data substantiating that the materials and finishes comply with the requirements.

B. Shop Drawings: Submit shop drawings showing the details of jointing, internal supports, anchorages, trim, flashing, corners and accessories. Show details of weatherproofing at edges, terminations and penetrations of the work.

1.05 PRODUCT HANDLING

A. Protect metal panels from damage during transportation and at jobsite. Store at site under cover on wood blocking. Damaged or rusted materials will be rejected and replaced with new work.

PART 2 - PRODUCTS

2.01 MATERIALS

A. Field Insulated Panel Assembly:

1. Size: Approximately 1" thick, and 12" wide.

2. Side Joint: Male-female design, with pocket to pocket field applied sealant and concealed fasteners.

3. Exterior face and finish:

a. Pattern: Profile number FP12 flush panel by AEP-SPAN.

b. Face Sheets: ASTM A446, Grade B, 24 gauge

c. Coating: ASTM A525, G-90 galvanizing

d. Primer: Oven cured, epoxy resin, 0.2 mil thick

e. Finish

(1) Fluorocarbon Coating: Full strength "Kynar 500" resin finish color coating applied over the primer by roller coating equipment and oven cured. Dry film thickness, 1.0 mil, including primer.

f. Colors:

(1) Fluorocarbon Color Coating: Provide coating manufactured by Desoto, Inc., Glidden-Durkee Division of SCM, or Sherwin-Williams Company. For color refer color schedule.

4. Miscellaneous Materials:

a. Provide panel manufacturer's standard metal subgirts and other structural or spacing members, designed for required structural anchorage and loading capacity and selected for compatibility with panel faces.

2.02 FABRICATION

A. Fabricate components of the system at factory ready for field assembly.

B. Apply specified finishes to conformance with manufacturer's standards, and according to coating manufacturer's instructions.

C. Fabricate panel system in lengths adequate to preclude the need for horizontal joints.

PART 3 - EXECUTION

3.01 INSTALLATION

A. Comply with panel manufacturer's instructions for assembly, installation and erection of preformed metal siding.

B. Anchor component parts securely in place, providing for necessary thermal and structural movement.

C. Fasteners:

1. Provide a concealed fastener installation system with no fasteners exposed on either the exterior or interior faces of the work.

2. Fastening system shall be designed to resist negative wind loads.

D. Erection of the panels must be started correctly and the panels held true to line. Horizontal lines are to be straight and level and vertical lines plumb.

E. Sealant: Refer Section 07900.

3.02 CLEANING

A. Clean exposed surfaces (exterior and interior) of work promptly after completion of installation. Comply with recommendations of panel and coating manufacturer.

3.03 DAMAGED PANELS

A. Replace damaged panels at no additional cost to Sandia.

END OF SECTION

SECTION 07530

FLEXIBLE SHEET ROOFING SYSTEM

PART 1 - GENERAL

1.01 RELATED DOCUMENTS

A. Drawings and general provisions of Contract, including General and Supplementary Conditions and Division-1 Specification sections, apply to work of this section.

1.02 DESCRIPTION

A. Types of roofing systems specified in this section utilizing flexible sheet roofing membranes include the following:

1. Mechanically fastened EPDM membrane, white color.

2. Fully adhered Geoflex PIB membrane, white color.

1.03 QUALITY ASSURANCE

A. Obtain primary flexible sheet roofing from a single manufacturer. Provide secondary materials as recommended by manufacturer of primary materials.

1. Manufacturer shall provide a full-time qualified technical representative at project site for purposes of advising Installer of procedures and precautions for use of roofing materials and inspection of roof installation.

B. Installer: A firm with not less than 3 years of successful experience in installation of roofing systems similar to those required for this project and which is acceptable to or licensed by manufacturer of primary roofing materials.

C. Assign work closely associated with flexible sheet roofing, including (but not limited to) insulation, flashing and counterflashing, expansion joints, and joint sealers, to Installer of flexible sheet roofing.

D. Pre-Roofing Conference: Prior to installation of roofing and associated work, meet at project site with Installer, roofing manufacturer, installers of related work, and other entities concerned with roofing performance, including (where applicable) Sandia Delegated Representative and test agencies. Record discussions and agreements and furnish copy to each participant. Provide at least 72 hours advance notice to participants prior to convening pre-roofing conference.

E. Requirements of Regulatory Agencies:

1. Factory Mutual: I-90 classification.

2. Underwriters Laboratories, Inc.: Class A fire hazard classification.

1.04 SUBMITTALS

A. Product Data: Submit specifications, installation instructions and general recommendations from manufacturers of flexible sheet roofing system materials, for types of roofing required. Include data substantiating that materials comply with requirements.

1.05 JOB CONDITIONS

A. Weather: Proceed with roofing work when existing and forecasted weather conditions permit work to be performed in accordance with manufacturer's recommendations and warranty requirements.

1.06 SPECIAL PROJECT WARRANTY

A. Provide written warranty, signed by Manufacturer of primary roofing materials and his authorized Installer, agreeing to replace/repair defective materials and workmanship as required to maintain roofing system in a watertight condition.

1. Warranty period is 10 years after date of building acceptance.

1.07 PRODUCT DELIVERY, STORAGE AND HANDLING

A. Deliver materials in original unopened containers.

B. Containers labeled with manufacturer's name, brand name, installation instructions, and identification of various items.

C. Store materials, except membrane, between 60 degrees F and 80 degrees F. If exposed to lower temperature, restore to proper temperature before using.

D. Store materials, except membrane, in dry area and protect. Damaged materials shall be replaced at Contractor's expense.

PART 2 - PRODUCTS

2.01 MATERIALS

A. Provide one of the following systems at the Contactor's option.

1. Versigard - Mechanically Fastened System by Goodyear.

2. ACR Bar Anchored System by General Tire.

3. Geoflex PIB membrane by Republic Powdered Metals, Inc.

B. Membrane Properties:

1. 0.060 inches thick E.P.D.M, white color.

Property	Test Method	Specification
Tensile Strength	ASTM D 412	1400 psi min.
Elongation	ASTM D 412	30% min.
Tear Resistance	ASTM D 412	125 lbs/in. min.
Heat Aging	ASTM D 1149	Tensile -1200 psi min. Elongation - 210%

2. 0.100 inches thick, fleece reinforced PIB, white color.

Property	Test Method	Specification
Breaking Strength	ASTM D 751	190 LBF
Elongation	ASTM D 751	60-100%
Tear Resistance	ASTM D 751	30.0 LBF
Puncture Resistance	FTMS 191 (Method 512c)	200 lbs Elongation - 210%

C. Auxiliary Materials for Flexible Sheet Roofing:

1. Sheet Seaming System: Manufacturer's standard materials for sealing lapped joints, including edge sealer to cover exposed spliced edges as recommended by manufacturer of selected system.

2. Cant Strips, Tapered Edge Strips and Flashing Accessories: Types recommended by manufacturer of roofing material, provided at locations indicated and at locations recommended by manufacturer, including adhesive tapes, flashing cements, and sealants.

3. Flashing Material: Manufacturer's standard system compatible with flexible sheet membrane.

4. Walkway Protection Pads: Provide TRAFBLOC by Siplast.

5. Mechanical Fasteners: Metal plates, caps, battens, accessory components, fastening devices, and adhesives to suit substrate and as recommended by roofing membrane manufacturer

6. Membrane Adhesive: As recommended by roofing membrane manufacturer for particular substrate and project conditions.

PART 3 - EXECUTION

3.01 INSTALLATION

A. General: Comply with manufacturers' instructions, except where more stringent requirements are indicated. Start installation only in presence of manufacturer's technical representative.

B. Mechanically-fastened Flexible Sheet Roofing: Install membrane by unrolling over prepared substrate, lapping adjoining sheets as recommended by manufacturer, and bonding and sealing seams. Install mechanical fasteners at spacing recommended by manufacturer, covering with adhesive-applied membrane so that no fasteners are exposed. Install flashings and counterflashings as shown or recommended by manufacturer.

C. Adhesive-adhered Flexible Sheet Roofing: Install membrane by unrolling over prepared substrate, lapping adjoining sheets as recommended by manufacturer. Apply adhesive to surfaces to be bonded and roll membrane into place when adhesive has properly cured. Treat seams with special cement and apply sealant to exposed sheet edges, tapering application as recommended by manufacturer. Install mechanical fasteners, flashings and counterflashings, and accessories at locations and as recommended by manufacturer.

D. Daily Seal: Care should be exercised to ensure that the water does not flow beneath any completed sections of roof. Temporarily seal loose edge of membrane with night sealant when weather is threatening.

E. Walkway Protection Pads: Apply walkway pads with membrane compatible bonding adhesive in patterns shown on the drawings.

END OF SECTION

SECTION 07600

FLASHING AND SHEET METAL

PART 1 - GENERAL

1.1 RELATED DOCUMENTS

A. Drawings and general provisions of Contract, including General and Supplementary Conditions and Division-1 Specification sections, apply to work of this section.

1.02 DESCRIPTION

A. The type of work specified in this section includes but is not limited to the following:

1. Metal Flashing and Counter Flashing

2. Metal Trim/Fascia Units

3. Elastic Sheet Flashing

1.03 SUBMITTALS

A. Submit shop drawings showing the manner of forming, jointing profiles and securement. Show waterproof connections to adjoining work and at obstructions and penetrations.

1.04 QUALITY ASSURANCE

A. References to ASTM and Federal standards shall mean the latest edition of those standards.

1.05 JOB CONDITIONS

A. Coordinate metal flashing and trim work with interfacing and adjoining work for proper sequencing of each installation.

PART 2 - PRODUCTS

2.01 MATERIALS

A. Metal flashing exposed to view on exterior of buildings used in conjunction with metal wall and roof panels shall be commercial quality steel sheets with a minimum of 0.20% copper, hot-dip galvanized to comply with ASTM A526, G90. Flashing shall be factory finished with fluorocarbon coating to match wall and roof panels. Provide 24 gauge.

B. Metal flashing used in flat roof areas and not exposed to view on exterior of buildings shall be 24 gauge commercial quality steel sheets with a minimum of 0.20% copper, hot-dip galvanized to comply with ASTM A526, G90.

C. Extruded Aluminum Reglets:

1. Superior Cushion-Lock reglets or approved equal.

a. Types: B-2.

D. Elastic Sheet Flashing:

1. BFG Vinyl Water Barrier or approved equal.

2. Thickness: 30 mils

3. Adhesive: Non-staining, as recommended by manufacturer.

E. Lead Flashing: Provide sheet complying with FS QQ-L-201, Grade B, formed from common desilverized pig lead, complying with ASTM-B-29, weighing 4.0 lbs. per sq. ft., except as otherwise detailed.

F. Elastomeric Flashing: Provide 0.060" thick E.P.D.M. rubber elastomer equal to Sure-Seal Elastoform Flashing by Carlisle Tire and Rubber.

G. Miscellaneous Materials:

1. Solder:

a. For use with steel, provide 50-50 tin/lead solder (ASTM B32), with rosin flux.

b. For use with stainless steel, provide 60-40 tin/lead solder (ASTM B32), with acid-chloride type flux, except use rosin flux over tinned surfaces.

2. Fasteners: Same metal as flashing/sheet metal or other noncorrosive metal as recommended by sheet manufacturer.

3. Adhesives: Type recommended by flashing sheet manufacturer for waterproof seaming and application of flashing sheet.

4. Metal Accessories: Provide sheet metal clips, straps, anchoring devices and similar accessory units as required for installation of work, matching or compatible with materials being installed, noncorrosive, size and gauge required for performance.

2.02 FABRICATED PRODUCTS

A. General Metal Fabrication:

1. Shop fabricate work to greatest extent possible. Comply with details shown and with applicable requirements of SMACNA "Architectural Sheet Metal Manual." Fabricate for waterproof performance; with expansion provisions for running work sufficient to permanently prevent leakage, damage and deterioration of the work. Fold back exposed edges to form hems.

2. Seams:

a. Fabricate nonmoving seams in sheet metal with flat-lock seams. For metal, tin edges to be seamed, form seams, and solder.

3. Expansion Provisions: Where lapped or bayonet-type expansion provisions in work cannot be used, or would not be sufficiently water/weatherproof, form expansion joints of intermeshing hooked flanges, not less than 1" deep, filled with mastic sealant (concealed within joints).

4. Sealant Joints: Where movable, nonexpansion type joints are indicated or required for proper performance of work, form metal to provide for proper installation of elastomeric sealant, in compliance with industry standards.

PART 3 - EXECUTION

3.01 INSTALLATION

A. General:

1. Coordinate the work with other work for the correct sequencing of items which make up the entire membrane or system of weatherproofing and waterproofing and rain drainage. Install work with laps, joints and seams which will be permanently watertight and weatherproof.

2. SMACNA Details: Except as otherwise detailed or specified, comply with applicable recommendations and details of the "Architectural Sheet Metal Manual" by SMACNA.

B. Separate dissimilar metals from each other by painting each metal surface in the area of contact with a heavy application of bituminous coating, or by other permanent separation as recommended by the manufacturers of the dissimilar metals.

C. Provide for thermal expansion of running trim, flashing, expansion joints and other items exposed for more than 15'-0" continuous length. Maintain a watertight installation at expansion seams. Locate expansion seams as shown or, if not shown, at the following maximum spacings for each general flashing use:

1. Flashing, and Trim: At 10'-0" intervals, and 2'-0" each side of corners and intersections.

D. Install work with lines and corners of exposed units true and accurate. Provide uniform, neat seams with minimum exposure of solder, welds and sealant.

E. Conceal fasteners and expansion provisions wherever possible in exposed work, and locate so as to minimize the possibility of leakage. Cover and seal work as required for a watertight installation.

1. Provide cleat-type anchorages for metal flashing and trim wherever practical, arranged to relieve stresses from building movement and thermal expansion.

F. Install sealant where joints occur between ends of counterflashing, fascias and copings. Compound shall be gun applied and shall be forced into grooves with sufficient pressure to fill groove solidly. Sealant shall be uniformly smooth and free of wrinkles. Joints shall be tooled slightly concave after sealant is installed.

G. Scuppers: Configuration as detailed.

1. Material: 24 ga galvanized steel

2. Seams: Soldered

3. Inside flange: Solder to scupper prior to installing scupper.

4. Set scupper in a full bed of roofing manufacturer's water-block sealant.

5. Fabricate scuppers, and closure flange of same material.

6. Apply sealant to flanges as recommended by SMACNA sheet metal manual.

7. Field paint scuppers to match metal wall panels.

END OF SECTION

SECTION 07610

METAL ROOFING

PART 1 - GENERAL

1.01 RELATED DOCUMENTS

A. Drawings and general provisions of Contract, including General and Supplementary Conditions and Division-1 Specification sections, apply to work of this section.

1.02 DESCRIPTION

A. Extent of metal roofing is shown on the drawings and indicated by provisions of this section.

B. The following types of work are specified in this section:

1. Batten seam metal roofing.

1.03 QUALITY ASSURANCE

A. Installer: A firm with 3 years of prior successful experience with installation of metal roofing of type and scope equivalent to work of this section.

B. Industry Standard: Except as otherwise shown or specified, comply with applicable recommendations and details of "Architectural Sheet Metal Manual" by SMACNA. Conform to dimensions and profiles shown.

1.04 SUBMITTALS

A. Product Data: Submit metal manufacturer's and fabricator's specifications, installation instructions and general recommendations for roofing applications. Include certification or other data substantiating that materials comply with requirements.

B. Samples: Submit 8" square samples of specified metal to be used as roofing with specified finishes applied.

C. Shop Drawings: Submit shop drawings showing manner of forming, joining and securing metal roofing, and pattern of seams. Show expansion joint details and waterproof connections to adjoining work and at obstructions and penetrations.

PART 2 - PRODUCTS

2.01 MATERIALS

A. Steel Roofing Sheet: Provide commercial quality hot dipped galvanized (G90) steel.

1. Finish: Provide full strength Kynar 500 fluorocarbon coating applied on the top side with a dry film thickness of 0.70 to 0.90 mil over 0.25 to 0.35 mil prime coat to provide a total dry film thickness of 0.95 to 1.25 mil. Bottom side shall be coated with a primer with a dry film thickness of 0.25 mil.

2. Strippable coating shall be liquid applied to the top side to protect the finish during fabrication, shipping and field handling. This strippable coating shall be removed before installation.

3. Thickness: 24 gage.

4. Profile:

a. Structural Batten system at Buildings 941, 942 and 943.

b. Snap-on Batten System at Building 940, Guardpost, Flow Monitoring Station.

c. Battens shall be 2" tall and 1 1/2" wide.

5. Provide roofing system by one of the following manufacturer's (or approved equal).

AEP-SPAN
Berridge
Copper Sales, Inc.
MM System Corp.
Peterson Aluminum Corp.
Merchant & Evans Industries, Inc.

B. Miscellaneous Materials:

1. General: Provide materials and types of fasteners, solder, welding rods, protective coatings, separators, sealants and accessory items as recommended by sheet metal manufacturer and fabricator for metal roofing work, except as otherwise indicated.

2. Bituminous Coating: Cold-applied asphaltic coating, complying with FS TT-C-494, Type II; 12 mils minimum dry film thickness, except as otherwise

indicated. Provide inert type non-corrosive compound, nominally free of sulfur components and other deleterious impurities.

3. Fabric Underlayment: Manufacturer's standard non-woven polyester fabric marketed for use in cold-applied single ply roof systems weighing 6.0 oz. per sq. yd., white, non-swelling, rot/mildew resistant.

   a. Product: E-6-N Rufon Fabric; Phillips Fiber Corp. or approved equal.

4. Provide trim and flashing of the same material, finish and color as the metal roofing.

2.02 SHOP FABRICATED UNITS

A. General Metal Fabrication: Shop fabricate work to greatest extent possible. Comply with details shown, and with applicable requirements of SMACNA "Architectural Sheet Metal Manual" and other recognized industry practices. Fabricate for waterproof and weather-resistant performance; with expansion provisions for running work, sufficient to permanently prevent leakage, damage or deterioration of the work. Form work to fit substrates. Comply with material manufacturer's instructions and recommendations for forming material. Form exposed sheet metal work without excessive oil-canning, buckling and tool marks, true to line and levels indicated, with exposed edges folded back to form hems.

PART 3 - EXECUTION

3.01 PREPARATION

A. Coordinate metal roofing with rain drainage work, flashing, trim and construction of decks, parapets, walls and other adjoining work, to provide a permanently leakproof, secure and non-corrosive installation.

3.02 INSTALLATION

A. Manufacturer's Recommendations: Except as otherwise shown or specified, comply with recommendations and instructions of manufacturer of sheet metal being fabricated and installed.

B. Separate dissimilar metals from each other by painting each metal surface in area of contact with a bituminous coating, or by applying adhesive polyethylene underlayment to each metal surface, or by other permanent separation as recommended by manufacturers of dissimilar metals.

C. Install fabric underlayment on substrate under metal roofing, to greatest extent possible unless otherwise recommended by manufacturer of sheet metal. Use adhesive for temporary anchorage, where possible, to minimize use of mechanical fasteners under metal roofing. Lap joints 2" minimum.

D. Form and fabricate sheets, seams, strips, cleats, valleys, ridges, edge treatments, integral flashings and other components of metal roofing to profiles, patterns and drainage arrangements shown, and as required for permanently leakproof construction. Provide for thermal expansion and contraction of the work. Seal joints as required for leakproof construction. Shop fabricate materials to greatest extent possible.

E. Fabricate and install work with lines and corners of exposed units true and accurate. Form exposed faces flat and free of buckles, excessive waves and avoidable tool marks considering temper and reflectivity of metal. Provide uniform, neat seams with minimum exposure of solder, welds and sealant. Except as otherwise shown, fold back sheet metal to form a hem on concealed side of exposed edges.

F. Conceal fasteners and expansion provisions where possible in exposed work, and locate so as to minimize possibility of leakage. Cover and seal fasteners and anchors as required for a tight installation.

3.03 CLEANING AND PROTECTION

A. Remove protective film from exposed surfaces of metal roofing, promptly upon installation. Strip with care to avoid damage to finishes.

B. Provide final protection in a manner acceptable to installer, which ensure metal roofing being without damage or deterioration at time of substantial completion.

END OF SECTION

SECTION 07631

GUTTERS

PART 1 - GENERAL

1.01 RELATED DOCUMENTS

A. Drawings and general provisions of Contract, including General and Supplementary Conditions and Division-1 Specification sections, apply to work of this section.

1.02 DESCRIPTION OF WORK

A. Built-in gutters (set into deck surface)

1.03 QUALITY ASSURANCE

A. References to ASTM and Federal standards shall mean the latest edition of that standard.

1.04 SUBMITTALS

A. Submit metal manufacturer's and fabricator's specifications, installation instructions and general recommendations for rain drainage applications.

B. Submit shop drawings showing manner of forming, jointing and securing metals to form rain drainage units. Show expansion joint details and waterproof connections to adjoining work and at obstructions and penetrations in rain drainage work.

1.05 JOB CONDITIONS

A. Coordinate rain drainage work with roofing, flashing, trim and the construction of decks, parapets, walls and other adjoining work, to provide a leakproof, secure and noncorrosive installation.

PART 2 - PRODUCTS

2.01 MATERIALS

A. Stainless steel sheet:

1. ASTM A167, Type 302/304, fully annealed, dead soft temper.

2. Thickness: 0.0313" (22 gauge) unless otherwise detailed.

B. Miscellaneous Materials:

1. Provide types of fasteners, solder, welding rods, coatings, separators, sealants and accessory items as recommended by sheet metal manufacturers for rain drainage work.

2. Solder for Rain Drainage: Provide 60% tin - 40% lead solder with acid-chloride flux, ASTM B 32; for soldering stainless steel.

3. Fasteners and Anchors: Same metal as rain drainage, or other metal as recommended by manufacturer of metal units for improved corrosion resistance.

4. Cleats and Straps: Same metal as rain drainage work being anchored or supported.

5. Bituminous Coating: Cold-applied asphaltic coating, FS TT-C-494, Type II, compounded for minimum thickness per coat of 15 mils (dry). Provide type which is nominally free of sulfur.

6. For sealant refer Section 07900.

7. Epoxy Seam Sealer: Manufacturer's standard 2-part noncorrosive metal seam cementing compound, recommended for exterior and interior nonmoving joints in rain drainage including riveted joints.

2.02 FABRICATION

A. General:

1. The fabrication requirements for rain drainage work apply to both shop-fabricated and on-site-fabricated work. Shop fabricate work to greatest extent possible.

2. Fabricate to comply with SMACNA "Architectural Sheet Metal Manual" and other recognized industry standards.

3. Provide for thermal expansion of running gutters and other items exposed for more than 15'-0" continuous length. Maintain a water-tight seal at expansion

joints. Locate expansion joints midway between drains (at high points in slopes).

4. Epoxy Cemented Seams: Where fixed seams or joints require sealing or cementing to ensure waterproofness or adequate strength, form rain drainage properly and install epoxy seam sealer in accordance with manufacturer's instructions.

5. Fabricate work with lines and corners of exposed units true and accurate. Form exposed faces flat and free of buckles, excessive waves and avoidable tool marks, considering temper and reflectivity of metal. Provide uniform, neat seams with minimum exposure of solder, welds and sealant. Fold back sheet metal to form hem on concealed side of exposed edges.

6. Provide strainer units at outlets of gutters fabricated of wire or wire mesh which is noncorrosive and compatible with sheet metal, with minimum 0.062" diameter wire and maximum 1/2" spacing of wires, in a beehive design.

7. Support and Anchorage: Fabricate units with adequate provisions for support and anchorage, of types needed for indicated method of installation.

8. Seaming and Soldering, General: Fabricate rain drainage with flat-lock soldered seams.

PART 3 - EXECUTION

3.01 INSTALLATION

A. General:

1. Comply with manufacturer's recommendations and installation instructions. Comply with SMACNA "Architectural Sheet Metal Manual."

2. Separate dissimilar metals from each other, and separate metals from corrosive substrates. Paint each metal surface in area of contact with a 5-mil (dry thickness) application of bituminous coating, or apply a troweled-in-place coating of roofing cement, or provide other permanent separation as recommended by manufacturers of the metals.

3. Conceal fasteners and expansion provisions in exposed work, and locate so as to minimize possibility of leakage. Cover and seal work as required for a tight installation.

a. Provide concealed cleat-type anchorages where practical. Arrange to relieve stresses in rain drainage work resulting from building movement and thermal expansion.

4. On vertical overlaps, lap sheet metal a minimum of 3".

5. On sloping overlaps, of slopes of not less than 6" in 12", lap unsealed overlaps a minimum of 6".

6. Install units of rain drainage work with lines and corners true and accurate in alignment and location.

3.02 CLEANING

A. Clean exposed surfaces of every substance which is visible or might cause corrosion of metal or deterioration of finish.

END OF SECTION

SECTION 07830

ROOF HATCHES

PART 1 - GENERAL

1.01 RELATED DOCUMENTS

A. Drawings and general provisions of Contract, including General and Supplementary Conditions and Division-1 Specification sections, apply to work of this section.

1.02 DESCRIPTION

A. Roof scuttle for ladder.

1.03 QUALITY ASSURANCE

A. Provide units manufactured by one of the following:

The Bilco Company
Bohem Manufacturing Company
Dur-Red Products
Inryco, Inc.
Babcock-Davis Asso.

1.04 SUBMITTALS

A. Submit shop drawings, catalog data and installation instructions for each type of roof scuttle specified.

PART 2 - PRODUCTS

2.01 MATERIALS

A. Zinc-Coated Steel: Comply with ASTM A526; hot dipped to comply with ASTM A525, G90, mill phosphatized.

B. Gauges:

1. Curb and Cover:

a. 14 ga. galvanized steel.

2. Cover Liner:

a. 22 ga. galvanized steel

C. Insulation: 1" thick glass fiber board.

D. Gaskets: Tubular or fingered design; or neoprene or polyvinyl chloride, or molded block design sponge neoprene.

E. Provide cadmium plated hardware.

2.02 FABRICATION

A. Sizes Required:

1. 2'-6"x3'-0" for ladder.

B. Curb Height: 12"

C. Flange curb and provide holes in flange for bolting to substrate.

D. Provide enclosed self-lifting mechanism, automatic hold-open devices, heavy pintle hinges, latch, padlock hasp, and operating handles for interior and exterior operation.

E. Factory primer with red oxide primer.

F. Provide insulated curb with integral cap flashing, and insulated cover.

G. Sloping Roofs: Where slope of roof deck exceeds 1/4" per foot, fabricate hatch curbs with height tapered to match slope, to result in level installation of tops of units.

PART 3 - EXECUTION

3.01 INSTALLATION

A. For finish painting refer Section 09900.

B. Anchor units in place by bolting or welding to substrate.

C. Provide a watertight installation.

D. Adjust hardware and operating devices for smooth, uninhibited operation of doors.

END OF SECTION

SECTION 07850

PREFABRICATED CURBS

PART 1 - GENERAL

1.01 RELATED DOCUMENTS

A. Drawings and general provisions of Contract, including General and Supplementary Conditions and Division-1 Specification sections, apply to work of this section.

1.02 DESCRIPTION

A. HVAC Curbs

B. Equipment Support Curbs

C. Pipe Supports

D. Roof Opening Curbs

1.03 QUALITY ASSURANCE

A. References to ASTM and Federal standards shall mean the latest edition of that standard.

B. Provide units by one of the following or approved equal.

1. Thybar Corporation

2. Custom Curb, Inc.

3. Pate Company

4. S & L Manufacturing Company

1.04 SUBMITTALS

A. Submit manufacturer's product specifications, rough-in diagrams, details and installation instructions for each type of roof curb and equipment support unit required.

1. For equipment supports, include manufacturer's certification that units have been load-tested and will safely support equipment loads indicated.

B. Submit shop drawings for the fabrication and installation of prefabricated curbs, except to extent units are fully dimensioned or detailed on manufacturer's standard data sheets. Include plans at 1" to 1'-0" scale, and details at 3" to 1'-0" scale.

PART 2 - PRODUCTS

2.01 MATERIALS

A. Fabricate units from zinc-coated steel, ASTM A 446, Grade C, designation G90 hot-dip coating, mill phosphatized. Clean and paint with rust-inhibitive metal primer paint, of type recommended by manufacturer, 2.0 mils dry film thickness.

1. Gauge and Height of Curb:

a. 8" minimum, above top of insulation

b. 18 gauge

B. Provide fire retardent treated wood nailer, not less than 1-5/8" thick and of width not less than width of curb wall assembly. Anchor nailer securely to top of metal frame unit. Provide lumber pressure treated with water-borne preservatives for "aboveground" use, complying with AWPB LP-2.

C. Curb Insulation: Rigid glass fiber board.

1. Density: 3-lb.

2. Thickness: 1-1/2" minimum.

D. Curb Liner: 22 ga. galvanized steel.

1. Mill phosphatized.

2. Flange at lower edges.

E. Cap Flashing:

1. Fabricated to match curb units and to cover a minimum of 3" over roof flashing.

2. Stainless steel complying with ASTM A167, Type 302/304, full annealed, dead soft temper; 0.0313", 22 gauge.

F. Fasteners: Noncorrosive, watertight metal screws.

2.02 FABRICATION

A. Provide manufacturer's standard shop-fabricated units, modified as necessary to comply with requirements. Where size or loading capacity requirements cannot be fulfilled through use of standard units, custom fabricate units in shop to match manufacturer's similar units, and to comply with requirements.

B. Coordination: Where units are shown to support shop-fabricated items of equipment do not proceed with fabrication of units until size of dimensions has been checked for coordination with equipment as shown by equipment shop drawings. Curbs shall be fabricated so that the top of curb is level regardless of roof slope. For curb units to be supplied by Mechanical equipment manufacturer refer to individual specifications in Division 15.

C. Fabricate exterior curb profile to receive roof insulation thickness.

D. Metal Deck Reinforcement: Framing of deck openings are shown and detailed on structural drawings.

E. Pipe Supports: Complete with curb mounted channels, saddle washers, plated rods, roller chairs and top brackets.

F. Pipe covers which have pipes penetrating the top of cover shall be provided with ABS curb cover, PVC or rubber boots and stainless steel clamps.

PART 3 - EXECUTION

3.01 INSTALLATION

A. Coordinate installation with deck construction, insulation, roofing and flashing work.

B. Anchor units in place as recommended by manufacturer, by bolting, screwing or welding to deck for secure support and attachment.

C. Install cap flashing units after roofing and roof flashing work has been completed.

D. Equipment supports shall span a minimum of two joists. No load shall be applied to a cantilevered section exceeding 1'-0" in length.

END OF SECTION

SECTION 07900

SEALANTS

PART 1 - GENERAL

1.01 RELATED DOCUMENTS

A. Drawings and general provisions of Contract, including General and Supplementary Conditions and Division-1 Specification sections, apply to work of this section.

1.02 DESCRIPTION

A. The required applications of sealants include, but are not limited to, the following general locations:

1. Flashing reglets and retainers.

2. Exterior wall joints.

3. Masonry control joints exterior and interior.

4. Interior sound sealed and air-sealed joints.

5. Isolation joints between structural steel and other elements.

6. Joints at penetrations of walls, decks and floors by piping and other services and equipment.

1.03 QUALITY ASSURANCE

A. Manufacturers: Firms with not less than 5 years of successful experience in production of types of sealants required for this project.

B. Obtain elastomeric sealants from a manufacturer which will, upon request, send a qualified technical representative to project site, for the purpose of advising installer on proper procedures for use of products.

C. Installer Qualifications: Engage an installer who has successfully completed within the last three years at least three joint sealer applications similar in type and size to that of the project and who will assign mechanics from these earlier applications to this project, of which one will serve as lead mechanic.

D. References to ASTM and Federal standards shall mean the latest edition of that standard.

1.04 SUBMITTALS

A. Manufacturer's Data: Submit copies of manufacturer's catalog data and installation instructions for each type of sealant and associated miscellaneous material required. Include manufacturer's letter of certification or certified laboratory test report indicating that each material complies with the requirements and is intended generally for the applications shown. Submit samples for color selection by Sandia Delegated Representative from manufacturer's standard line of colors.

1.05 JOB CONDITIONS

A. Do not install sealants under adverse weather conditions, or when temperatures are below or above manufacturer's recommended limitations for installation.

B. Where joint width is affected by ambient temperature install elastomeric sealants only when temperatures are in the lower third of the manufacturer's recommended installation temperature range. Coordinate time schedule to avoid delay of project.

C. Statement of Noncompliance: When it is necessary to proceed with installation of sealants under conditions which do not fully comply with requirements, prepare a written statement for Sandia Delegated Representative indicating the nature of noncompliance, reasons for proceeding, precautionary measures taken to ensure best possible work, and names of individuals concurring with decision to proceed with installation.

D. Joint Width Conditions: Do not proceed with installation of joint sealers when joint widths are less than allowed by joint sealer manufacturer for application indicated.

PART 2 - PRODUCTS

2.01 MATERIALS

A. General Exterior Construction:

1. Polyurethane Sealant:

a. Two part polyurethane rubber complying with FS TT-S-227E; Pecora Dynatrol II or approved equal.

B. General Interior Construction:

1. For interior use at moisture free locations provide Pecora AC-20, acrylic latex or approved equal.

2. For interior applications around showers, sinks, clean rooms, and similar areas provide silicone sealant complying with FS TT-S-01543, Class A and with ANSI A 136.1 for mold growth.

3. Acoustical Sealant:

a. Concealed locations: Nonhardening, nondrying, permanently flexible; Tremco Acoustical Sealant or approved equal.

b. Exposed locations: Pecora AC-20, acrylic latex or approved equal.

C. Traffic Surfaces:

1. Interior: Polyurethane, complying with FS TT-S-227E, Type I, Class A, for horizontal surfaces subject to traffic or abrasion.

2. Joint Sealants for Paving:

a. Two-part self-leveling polyurethane sealant complying with FS TT-S-227E.

D. Glazing: Refer to Section 08800 - Glazing.

E. Fire Retardant Sealants: Refer Section 07270, Firestopping.

2.02 MISCELLANEOUS MATERIALS

A. Joint Primer: Provide the proper primer for each sealant specified as recommended by the manufacturer for the particular surface to be sealed.

B. Joint Cleaner: Follow manufacturer's recommendations. Do not wash surfaces with soap or other detergents.

C. Backer Rod: Polyethylene foam rod stock, sized and shaped to control depth of sealant and to provide 20% to 50% compression upon insertion.

PART 3 - EXECUTION

3.01 JOINT SURFACE PREPARATION

A. Clean out joints immediately before installing joint sealers to comply with recommendations of joint sealer manufacturers and the following requirements:

1. Remove all foreign material from joint substrates which could interfere with adhesion of joint sealer, including dust; paints, except for permanent, protective coatings tested and approved for sealant adhesion and compatibility by sealant manufacturer; oil; grease; waterproofing; water repellants; water; surface dirt and frost.

2. Clean concrete, masonry, unglazed surfaces of ceramic tile and similar porous joint substrate surfaces, by brushing, grinding, blast cleaning, mechanical abrading, acid washing or a combination of these methods to produce a clean, sound substrate capable of developing optimum bond with joint sealers. Remove loose particles remaining from above cleaning operations by vacuuming or blowing out joints with oil-free compressed air.

3. Remove laitance and form release agents from concrete.

4. Clean metal, glass, porcelain enamel, glazed surfaces of ceramic tile and other non-porous surfaces by chemical cleaners or other means which are not harmful to substrates or leave residues capable of interfering with adhesion of joint sealers.

B. Primer or seal joint surfaces where recommended by sealant manufacturer. Do not allow primer/sealer to spill or migrate onto adjoining surfaces.

C. Install backer rod to the depth recommended by sealant manufacturer.

3.02 INSTALLATION

A. Employ only proven installation techniques which will insure that sealants will be deposited in uniform, continuous ribbons without gaps or air pockets, with complete "wetting" of the joint bond surfaces equally on opposite sides. Except as otherwise indicated, fill sealant rabbet to a slightly concave surface, slightly below adjoining surfaces. Where horizontal joints are between a horizontal surface and a vertical surface, fill joint to form a slight cove, so that joint will not trap moisture and dirt.

B. Install sealant to depths as recommended by sealant manufacturer but within the following general limitation, measured at the center (thin) section of the bead.

1. Unless otherwise indicated on the drawings, sealant application for pavement, sidewalks and other exterior concrete surfaces having expansion and contraction joints, shall be as follows:

a. Contraction Joints and Construction Joints: Joints shall be sawed to one-fourth of the slab thickness to a width not less than 1/4-inch or more than 3/8-inch. Sealant shall be placed in the joint to a minimum depth of 3/4-inch.

b. Expansion Joints: Joints shall be cleaned to a depth of one inch and filled with sealant.

2. For normal moving joints sealed with elastomeric sealants but not subject to traffic, fill joints to a depth equal to 50% of joint width, but neither more than 1/2" deep nor less than 1/4" deep.

3. For joints sealed with nonelastomeric sealants and caulking compounds, fill joints to a depth in range of 75% to 125% of joint width.

C. Do not allow sealants to overflow onto adjacent surfaces or to migrate into voids of adjoining surfaces including exposed aggregate panels and similar rough textures. Use masking tape to prevent staining of adjoining surfaces by either primer or sealant.

D. Immediately after sealant application and prior to time skinning or curing begins, tool sealants to form smooth, uniform beads of configuration indicated, to eliminate air pockets and to ensure contact and adhesion of sealant with sides of joint. Remove excess sealants from surfaces adjacent to joint. Do not use tooling agents which discolor sealants or adjacent surfaces or are not approved by sealant manufacturer.

1. Concave joint configuration per Figure 6A in ASTM C 962, unless otherwise indicated.

3.03 CLEANING

A. Clean adjacent surfaces free of sealant or soiling as work progresses. Use solvent or cleaning agent as recommended by sealant manufacturer. Leave finish work in a neat, clean condition.

END OF SECTION

SECTION 07910

JOINT FILLERS AND GASKETS

PART 1 - GENERAL

1.01 RELATED DOCUMENTS

A Drawings and general provisions of Contract, including General and Supplementary Conditions and Division-1 Specification sections, apply to work of this section.

1.02 DESCRIPTION

A. The required applications of joint fillers and gaskets include, but are not necessarily limited to, the following general types and locations:

1. Isolation and expansion joint fillers in structural concrete

2. Exterior wall component joint fillers

3. Sound and air stripping in partition construction

4. Floor construction/expansion joint fillers

1.03 SUBMITTALS

A. Submit manufacturer's specifications for each type of material required.

B. Submit three, 12" long samples of each joint filler or gasket.

PART 2 - PRODUCTS

2.01 MATERIALS, GENERAL

A. Size and Shape: Provide sizes and shapes of units as shown, or if not shown, as recommended by manufacturer for joint size and condition shown.

B. Compressibility: Specified hardnesses and compressibilities are intended to establish requirements for normal or average conditions of installation and use. Where a range of hardness or compressibility is available for a product, comply with manufacturer's recommendations for specific condition of use.

C. Compatibility: Before purchase of each filler or gasket material, confirm that it is compatible with substrate, sealants, and other materials in joint system.

D. Adhesives: Pressure sensitive adhesives, compatible with each material in joint system, may be applied (at Installer's option) to one face of joint fillers and gaskets to facilitate installation and permanent anchorage. Do not allow adhesives to contaminate sealant bond surfaces in joint system.

2.02 CONCRETE CONTROL/EXPANSION JOINT FILLERS

A. Bituminous and Fiber Joint Filler:

1. Provide resilient and nonextruding type premolded bituminous impregnated fiberboard units complying with ASTM D 1751, FS HH-F-341, Type I and AASHTO M 213.

2. Products offered by manufacturers to comply with requirements include the following:

Flexcell; Celotex Corporation
Sonoflex Cane Fiber; Contec/Sonneborn
Cane Fiber 1390; A. C. Horn Company
Tex-Lite; J & P Petroleum Prod. Inc.
Fiber; W. R. Meadows, Inc.
Flex-Jt and Gray-Flex; Old North Mfg. Co., Inc.

2.03 JOINT SEALANT BACK-UP

A. Provide sealant backings of material and type which are non-staining; are compatible with joint substrates, sealants, primers and other joint fillers; and are approved for applications indicated by sealant manufacturer based on field experience and laboratory testing.

B. Plastic Foam Joint-Fillers: Preformed, compressible, resilient, non-waxing, non-extruding strips of plastic foam of material indicated below, and of size, shape and density to control sealant depth and otherwise contribute to producing optimum sealant performance.

1. Open-cell polyurethane foam, flexible.

2.04 NEOPRENE SHEET STRIPPING

A. Provide expanded synthetic neoprene rubber complying with ASTM D 1056, Class SC-E, of 2 to 5 psi compression deflection (Grade SCE 41).

1. Products offered by manufacturers to comply with requirements include the following:

    Neoprene NN; Williams Products Inc.
    Closed Cell Neoprene; D.S. Brown Company
    Closed Cell Neoprene; Rubatex Corporation
    Closed Cell Neoprene; Kirkhill Rubber Company

PART 3 - EXECUTION

3.01 INSTALLATION

A. Comply with manufacturer's instructions and recommendations for installation of each type of joint filler required, unless more stringent requirements are shown or specified.

B. Set units at proper depth or position in joint to coordinate with other work, including installation of bond breakers, backer rods and sealants. Do not leave voids or gaps between ends of joint filler units.

C. Recess exposed edges or faces of exposed joint fillers, slightly behind adjoining surfaces, unless otherwise shown, so that compressed units will not protrude from joints.

END OF SECTION

SECTION 08100

METAL DOORS AND FRAMES

PART 1 - GENERAL

1.01 RELATED DOCUMENTS

A. Drawings and general provisions of Contract, including General and Supplementary Conditions and Division-1 Specification sections, apply to work of this section.

1.02 QUALITY ASSURANCE

A. Provide metal doors and frames manufactured by a single firm specializing in the production of this type of work.

B. Provide doors and frames complying with Steel Door Institute Recommended Specifications: Standard Steel Doors and Frames (SDI-100) and as herein specified.

C. Fire-Rated Assemblies: Wherever a fire-resistance classification is shown or scheduled for metal doors and frames, provide fire-rated hollow metal doors and frames investigated and tested as a fire door assembly, complete with type of fire door hardware to be used. Identify each fire door and frame with recognized testing laboratory labels, indicating applicable fire rating of both door and frame.

D. Construct assemblies to comply with NFPA Standard No. 80, and as herein specified.

1.03 SUBMITTALS

A. Submit manufacturer's specifications for fabrication and installation.

B. Submit shop drawings including details of each frame type, elevations of door types, conditions at openings, details of construction, location and installation requirements of finish hardware and reinforcements and details of joints and connections.

C. Provide a schedule of doors and frames using same reference numbers for details and openings as those on the contract drawings.

1.04 DELIVERY, STORAGE AND HANDLING

A. Deliver hollow metal work cartoned or crated to provide protection during transit and job storage.

B. Inspect hollow metal work upon delivery for damage. Minor damages may be repaired, provided the re-finished items are equal in all respects to new work; otherwise, remove and replace damaged items as directed.

C. Store doors and frames at the building site under cover. Place units on at least 4" high wood sills or on floors in a manner that will prevent rust and damage. Avoid the use of nonvented plastic or canvas shelters which could create a humidity chamber. If the cardboard wrapper on a door becomes wet, remove the carton immediately. Provide a 1/4" space between stacked doors to promote air circulation.

PART 2 - PRODUCTS

2.01 MATERIALS

A. Hot-Rolled Steel Sheets and Strips: Commercial quality carbon steel, pickled and oiled, complying with ASTM A569 and ASTM 568.

B. Cold-Rolled Steel Sheets: Commercial quality carbon steel, complying with ASTM A366 and ASTM A568.

C. Supports and Anchors: Fabricate of not less than 16 gauge sheet metal. Galvanize after fabrication units to be built into exterior walls, complying with ASTM A153, Class B.

D. Inserts, Bolts and Fasteners: Manufacturer's standard units, except hot-dip galvanize items to be built into exterior walls, complying with ASTM A153, Class C or D, as applicable.

E. Shop-Applied Paint: For steel surfaces, use rust-inhibitive enamel or paint, either air-drying or baking, suitable as a base for specified finish paints.

2.02 FABRICATION, GENERAL

A. Fabricate hollow metal units to be rigid, neat in appearance and free from defects, warp or buckle. Accurately form metal to required sizes and profiles. Wherever practicable, fit and assemble units in the manufacturer's plant. Clearly identify work that cannot be permanently factory-assembled before shipment, to assure proper assembly at the project site. Metallic filler to conceal manufacturing defects is not acceptable.

B. Exposed Fasteners: Unless otherwise indicated, provide countersunk flat Phillips heads for exposed screws and bolts.

C. Finish Hardware Preparation: Prepare hollow metal units to receive mortised and concealed Finish Hardware, including cutouts, reinforcing, drilling and tapping in accordance with final finish hardware Schedule and templates provided by hardware supplier. Comply with applicable requirements of ANSI A115, "Specifications for Door and Frame Preparation for Hardware."

1. Reinforce hollow metal units to receive surface-applied hardware. Drilling and tapping for surface-applied finish hardware may be done at project site.

2. Prepare frames for intrusion detection switches per details on the drawings.

D. Shop Painting:

1. Clean, treat and paint exposed surfaces of fabricated hollow metal units.

2. Clean steel surfaces of mill scale, rust, oil, grease, dirt and other foreign materials before application of the shop coat of paint.

3. Apply pretreatment to cleaned metal surfaces, using cold phosphate solution (SSPC-PT2), hot phosphate solution (SSPV-PT4) or basic zinc chromate-vinyl butyral solution (SSPC-PT3).

4. Apply shop coat of prime paint within time limits recommended by pretreatment manufacturer. Apply a smooth coat of even consistency to provide a uniform dry film thickness of not less than 2.0 mils.

2.03 DOORS

A. Provide flush design doors, 1-3/4" thick of seamless construction. For single-acting swing doors, bevel both vertical edges 1/8" in 2".

1. Close top and bottom of doors flush with 16 ga. steel channels.

2. Hemmed door edges shall be epoxy filled and ground smooth.

B. Exterior Doors:

1. Fabricate exterior doors of 2 galvanized, stretcher-leveled steel sheets not less than 16 gauge. Construct doors with smooth, flush surfaces without visible joints or seams or exposed faces or stile edges, except around glazed or louvered panel insets.

a. Door Core: Rigid urethane core foamed in place and chemically bonded to interior surfaces. Provide self-bonding, self-hardening and self-extinguishing foam.

C. Interior Doors:

1. Fabricate interior doors of 2 cold-rolled, stretcher-leveled steel sheets not less than 18 gauge. Construct doors with smooth, flush surfaces, without visible joints or seams on exposed faces or stile edges, except around glazed or louvered panel inserts.

    a. Door Core: One-piece, resin-impregnated honeycomb core with sanded edges bonded to face sheets.

D. Finish Hardware Reinforcement: Reinforce doors for required hardware shall be in accordance with SDI-107 except as noted below.

1. Hinges: Steel plate 3/16" thick x 1'-1/2" wide x 6" longer than hinge, secured by not less than 6 spot-welds.

2. Flush Bolts: 12 gauge steel sheet, secured with not less than 2 spot-welds.

3. Surface Applied Closers: 12 gauge steel sheet, secured with not less than 6 spot-welds.

4. Combination locks: 12 gauge sheet, secured with not less than 6 spot-welds. Center of reinforcement shall be 5'-0" above the bottom of the door.

E. Field Painting:

1. Refer Section 09900 - PAINTING.

2. Paint tops and bottoms of exterior doors prior to hanging doors.

2.04 FRAMES

A. Provide hollow metal frames for doors, sidelights, borrowed lights, and other openings, of size and profile as indicated.

B. Fabricate frames of full-welded unit construction, with corners mitered, reinforced, continuously welded full depth and width of frames.

C. Knock-down type frames are not acceptable.

D. Form frames of either cold or hot-rolled sheet steel.

1. Gauge: Not less than 14, for exterior openings up to and including 4'-0" wide.

2. Gauge: Not less than 16, for interior openings up to and including 4'-0" wide.

3. For openings over 4'-0" wide, increase thickness by at least one standard gauge.

E. Finish Hardware Reinforcement: Reinforce frames for required finish hardware as follows:

1. Hinges and Pivots: Steel plate 3/16" thick x 1-1/2" wide x 6" longer than hinge, secured by not less than 6 spot-welds.

2. Strike Plate Clips: Steel plate 3/16" thick x 1-1/2" wide x 3" long.

3. Surface-Applied Closers: 12 gauge steel sheet, secured with not less than 6 spot-welds.

F. Mullions and Transom Bars: Provide closed or tubular mullions and transom bars where indicated. Fasten mullions and transom bars at crossings and to jambs by butt welding. Reinforce joints between frame members with concealed clip angles or sleeves of same metal and thickness as frame.

1. Removable Mullions: Provide 4" wide mullions with integral stops. Head mounting bracket shall be 12 gauge steel minimum, secured to frame head at rabbets by four #8 machine screws. Sill bracket shall be 12 gauge steel minimum secured to concrete floor with four concrete screws. Mullion shall be secured to each bracket with four #8 x 1/2" flat head machine screws. Mullion shall be reinforced at screw locations with 12 gauge steel plates welded to mullion.

G. Jamb Anchors: Furnish jamb anchors as required to secure frames to adjacent construction, formed of not less than 18 gauge galvanized steel.

1. Metal Stud Partitions: Inset type with notched clip to engage metal stud, welded to back of frames. Provide at least 4 anchors for each jamb for frames up to 7'-6" in height; 5 anchors up to 8'-0" jamb height; one additional anchor each 24" or fraction thereof over 8'-0" height.

2. In-Place Concrete: Anchor frame jambs with minimum 3/8" concealed bolts into expansion shields or inserts at 6" from top and bottom and 26" o.c., unless otherwise shown. Reinforce frames at anchor locations. Apply removable stop to cover anchor bolts unless otherwise indicated.

H. Floor Anchors: Provide floor anchors in addition to jamb anchors for each jamb and mullion which extends to floor, formed of not less than 14 gauge galvanized steel sheet as follows:

1. Monolithic Concrete Slabs: Clip type anchors, with 2 holes to receive fasteners, welded to bottom of jambs and mullions.

I. Head Anchors: Provide 2 anchors at head of frames exceeding 42" wide for frames mounted in steel stud walls.

J. Head Reinforcing: For frames over 4'-0" wide in masonry wall openings, provide continuous steel channel or angle stiffener, not less than 12 gauge for full width of opening, welded to back of frame at head.

K. Spreader Bars: Provide removable spreader bar across bottom of frames, tack welded to jambs and mullions.

L. Rubber Door Silencers: Except on weatherstripped frames, drill stops to receive 3 silencers on strike jambs of single-swing frames and 2 silencers on heads of double-swing frames.

2.05 STOPS AND MOLDINGS

A. Provide stops and moldings around louvered panels in hollow metal units and in frames to receive doors, where indicated.

B. Form fixed stops and moldings integral with frame. Provide fixed stops on inside of hollow metal units exposed to exterior and on corridor side of interior units, unless otherwise indicated.

C. Provide removable stops and molds at other locations, formed of not less than 20 gauge steel sheets. Secure with countersunk machine screws spaced uniformly not more than 12" o.c. Form corners with butted hairline joints.

1. Coordinate width of rabbet between fixed and removable stops with type of installation indicated.

PART 3 - EXECUTION

3.01 INSTALLATION

A. Install hollow metal units and accessories in accordance with the final shop drawings, manufacturer's data, and as herein specified.

B. Placing Frames:

1. Set frames accurately in position, plumbed, aligned, and braced securely until permanent anchors are set. After wall construction is complete, remove temporary braces and spreaders leaving surfaces smooth and undamaged.

2. At in-place concrete construction, set frames and secure in place with machine screws and anchorage devices.

3. Place frames at fire-rated openings in accordance with NFPA Standard No. 80.

4. Remove spreader bars only after frames or bucks have been properly set and secured.

C. Door Installation:

1. Fit hollow metal doors accurately in their respective frames, with the following clearances:

a. Jambs and Head: 3/32".

b. Meeting Edges, Pairs of Doors: 1/8".

c. Bottom: 3/8", where no threshold or carpet.

d. Bottom: 1/8", at threshold or carpet.

2. Place fire-rated doors with clearances as specified in NFPA Standard No. 80.

3. Finish hardware installation is specified under Division 8 hardware sections.

3.02 ADJUST AND CLEAN

A. Final Adjustments: Check and readjust operating finish hardware items in hollow metal work just prior to final inspection. Leave work in complete and proper operating condition. Remove and replace defective work, including doors or frames which are warped, bowed or otherwise unacceptable.

B. Prime Coat Touch-Up: Immediately after erection, sand smooth any rusted or damaged areas of prime coat and apply touch-up of compatible air-drying primer.

END OF SECTION

SECTION 08210

WOOD DOORS

PART 1 - GENERAL

1.01 RELATED DOCUMENTS

A. Drawings and general provisions of Contract, including General and Supplementary Conditions and Division-1 Specification sections, apply to work of this section.

1.02 DESCRIPTION

A. The types of doors required include the following:

1. Prefinished Solid core flush wood doors.

1.03 QUALITY ASSURANCE

A. Wood doors shall meet the applicable requirements of the National Woodwork Manufacturer's Association (NWMA) as outlined in I.S. 1 "Wood Flush Doors."

B. Hardwood veneers for wood doors shall comply with the standards in the Department of Commerce, Commercial Standards CS171.

C. Every wood door shall bear the "Quality Certified" seal of approval for conformance with NWMA I.S. 1 - factory marked.

D. Provide stock wood doors manufactured by a single firm specializing in the production of this work, as manufactured by one of the following: Weyerhauser, Eggers, Algoma or approved equal.

1.04 SUBMITTALS

A. Submit manufacturer's product data specifications for each type of wood door.

B. Submit shop drawings for the fabrication and erection of wood doors. Include details of each frame type, elevations of door design types, conditions at openings, details of construction, location and installation requirements of finish hardware and reinforcements, and details of joints and connections. Provide fabrication, erection and anchorage details at 3" to 1'-0" scale. Show anchorage and accessory items.

C. Submit a sample of each wood door type. Samples will be reviewed for color and texture only. Compliance with the other requirements is the exclusive responsibility of the Contractor.

D. Submit written agreement in door manufacturer's standard form signed by the manufacturer, installer and Contractor, agreeing to repair or replace defective doors which have warped (bow, cup or twist) or which show photographing of construction below in face veneers, or do not conform to tolerance limitations of NWMA. Warranty shall be in effect during the following period of time after date of acceptance.

1. Solid Core Flush Interior Doors: Life of the installation.

1.05 PRODUCT DELIVERY, STORAGE AND HANDLING

A. Protect wood doors during transit, storage and handling to prevent damage, soiling and deterioration. Comply with the "On-Site Care" recommendations of NWMA pamphlet "Care and Finishing of Wood Doors" and with manufacturer's instructions. Each door shall be wrapped separately for delivery.

PART 2 - PRODUCTS

2.01 FABRICATION - GENERAL

A. Fabricate wood door units to be rigid, neat in appearance and free of defects, warp or buckle. Accurately form doors to required sizes and profiles.

2.02 DOOR CONSTRUCTION

A. Interior Solid Core Flush Wood Doors:

1. Core Construction: Particleboard.

2. Face Panels: 3-ply plywood.

3. Adhesive: Type II water-resistant bond.

4. Face Veneers:

a. For transparent finished doors provide plain sliced red oak, NWMA Premium Grade.

5. Exposed Surfaces for Transparent Finish: Provide exposed edges and other exposed solid wood components of the same species as face veneers.

B. Shop Finish:

1. Prefinish wood doors at factory or finish shop.

2. Comply with recommendations of AWI for factory finishing of doors, including final sanding immediately before application of finishing materials.

3. Refer Section 09900 for finish.

2.03 HARDWARE PREPARATION

A. Prepare wood door units to receive mortised and concealed finish hardware, including cutouts, drilling and tapping in accordance with final Finish Hardware Schedule and templates provided by hardware supplier.

1. Locate finish hardware as shown on final shop drawings, or if not shown, in accordance with "Recommended Locations for Builder's Hardware," published by the National Builders' Hardware Association.

2. Take accurate field measurements of hardware mortises in metal frames to verify dimensions and alignment.

PART 3 - EXECUTION

3.01 INSTALLATION

A. Preparation:

1. Doors shall be stored in fully covered, well ventilated areas and protected from extreme changes in temperature and humidity. Prior to installation condition doors to prevailing humidity in installation area. Materials shall be handled to prevent damaging or scratching. Damaged doors shall be rejected and shall be replaced at no additional cost to Sandia.

B. Bevel non-fire-rated doors 1/8" in 2" at lock and hinge edges.

C. Fit to frames and machine for hardware to whatever extent not previously worked at factory as required for proper fit and uniform clearance at each edge.

1. Cuts made on the job shall be sealed immediately after cutting, using a clear water-resistant varnish or sealer.

D. Clearance: For non-fire doors provide clearances of 1/8" at jambs and heads; 1/8" at meeting stills for pairs of doors; and 1/2" from bottom of door to top of decorative floor finish or covering, except where threshold is shown or scheduled provide 1/4" clearance from bottom of door to top of threshold.

3.02 ADJUST AND CLEAN

A. Operation: Rehang or replace doors which do not swing or operate freely, as directed by the Sandia Delegated Representative.

B. Finished Doors: Refinish or replace doors damaged during installation, as directed by the Sandia Delegated Representative.

END OF SECTION

SECTION 08305

ACCESS DOORS

PART 1 - GENERAL

1.01 DESCRIPTION

A. Flush panel access doors for drywall.

B. Recessed panel access doors for GWB ceilings.

1.02 QUALITY ASSURANCE

A. Provide access doors manufactured by one of the following:

1. The Williams Company.

2. Milcor Div./Inryco, Inc.

3. Karp Associates, Inc.

4. Birmingham Ornamental Iron Co.

B. Furnish inserts and anchoring devices which must be built into other work for the installation of access doors. Coordinate delivery with other work to avoid delay.

1.03 SUBMITTALS

A. Submit manufacturer's technical data and installation instructions for each type of access door assembly.

PART 2 - PRODUCTS

2.01 MATERIALS AND FABRICATION

A. General: Furnish access door assemblies manufactured as an integral unit, complete with all parts and ready for installation.

1. Steel Access Doors and Frames: Fabricate units of continuous welded steel construction. Grind welds smooth and flush with adjacent surfaces. Furnish attachment devices and fasteners of the type required to secure access panels to the types of support shown.

2. Frames: Fabricate from 16 gauge sheet steel.

3. Fabricate frame with exposed flange approximately 1" wide around perimeter of frame for units installed in the following construction:

   a. Drywall finish

   b. Ceramic tile finish

B. Flush Panel Doors: Fabricate from not less than 14 gauge sheet steel with concealed spring hinges set to open to 175 degrees. Finish with manufacturer's factory-applied prime coat of baked enamel.

C. Locking devices for nonrated access doors:

   1. Furnish flush, screwdriver-operated cam locks of the number required to hold door in flush, smooth plane when closed.

PART 3 - EXECUTION

3.01 INSTALLATION

A. Comply with manufacturer's instructions for installation of access doors.

B. Coordinate installation with work of other trades.

C. Set frames accurately in position and securely attach to supports with face panels plumb and level in relation to adjacent finish surfaces.

D. Adjust hardware and panels after installation for proper operation.

E. Remove and replace panels or frames which are warped, bowed or otherwise damaged.

END OF SECTION

SECTION 08331

OVERHEAD COILING DOORS

PART 1 - GENERAL

1.01 RELATED DOCUMENTS

A. Drawings and general provisions of Contract, including General and Supplementary Conditions and Division-1 Specification sections, apply to work of this section.

1.02 DESCRIPTION

A. Provide complete operating door assemblies including door curtains, guides, counterbalance mechanism, operators and installation accessories.

B. The following types of rolling doors are specified in this section:

1. Steel rolling doors.

1.03 QUALITY ASSURANCE

A. Furnish each rolling service door as a complete unit produced by one manufacturer, including hardware, accessories, mounting and installation components.

B. Furnish rolling door units by one manufacturer for the entire project.

C. Provide insulated rolling doors by one of the following:

1. Atlas Steel Products Co.

2. The Cookson Co.

3. Kinnear Door

4. Overhead Door

1.04 PERFORMANCE

A. Design and reinforce rolling doors to withstand a wind loading pressure with a maximum deflection of L/120 of opening width, as follows:

1. Wind Loading Pressure: 30 psf

1.05 SUBMITTALS

A. Submit manufacturer's product data, roughing-in diagrams, wiring diagrams, and installation instructions for each type and size of rolling door. Include operating instructions and maintenance information data.

B. Submit shop drawings for special components and installations which are not fully dimensioned or detailed on manufacturer's data sheets.

1.06 JOB CONDITIONS

A. Furnish inserts and anchoring devices which must be set in concrete or built into masonry for the installation of the units.

B. Provide setting drawings, templates, instructions and directions for installation of anchorage devices. Coordinate delivery with other work to avoid delay.

PART 2 - PRODUCTS

2.01 MATERIALS

A. Door Curtain:

1. Fabricate rolling door curtain of interlocking slats designed to withstand the specified wind loading, of continuous length for the width of the door without splices. Unless otherwise shown or specified, provide slats of the material gauge recommended by the door manufacturer for the size and type of door required, and as follows:

a. Steel Door Curtain Slats: Structural quality, cold-rolled galvanized steel sheets complying with ASTM A 446, Grade A, with G90 zinc coating, complying with ASTM A 525, and phosphate treated before fabrication.

2. Slats:

a. Insulated slats: Provide approximately 3/4" of polyurethane insulation sandwiched between two layers of 20 gauge galvanized steel faces.

3. Endlocks: Malleable iron castings galvanized after fabrication, secured to curtain slats with galvanized rivets. Provide locks on alternate curtain slats for curtain alignment and resistance against lateral movement.

4. Windlocks: Malleable iron castings secured to curtain slats with galvanized rivets. Provide windlocks on all doors. Space windlocks approximately 24" o.c. on both edges of curtain.

5. Bottom Bar:

    a. Two steel angles, 2" x 2" x 1/8" minimum.

    b. Provide a replaceable gasket of flexible vinyl or neoprene secured to bottom bar as a weather seal.

B. Curtain Jamb Guides:

1. Material:

    a. Steel

2. Fabricate curtain jamb guides of shapes with sufficient depth and strength to retain the curtain against specified wind loading. Build up units with minimum 3/16" thick sections. Slot bolt holes for track adjustment.

3. Secure continuous wall angle to wall framing by 1/2" minimum bolts at not more than 3'-0" o.c. Extend wall angles above door opening head to support coil brackets. Place anchor bolts in exterior wall guides so that they are concealed when door is in closed position. Provide removable stops on guides to prevent over-travel of curtain, and a continuous bar for holding windlocks.

C. Weather Seals:

1. Provide natural rubber or neoprene rubber weatherstripping for exterior exposed doors. Secure weather seals with continuous metal pressure bars. At door heads, use a 1/8" thick continuous sheet secured to the inside of the curtain coil hood. At door jambs, use a 1/8" thick continuous strip secured to the exterior side of the jamb guide.

D. Counterbalancing Mechanism:

1. Counterbalance doors by means of an adjustable steel helical torsion spring, mounted around a steel shaft and mounted in a spring barrel and connected to the door curtain with the required barrel rings. Use grease-sealed ball bearings or self-lubricating graphite bearings for rotating members.

2. Counterbalance Barrel:

    a. Fabricate spring barrel of hot-formed structural quality carbon steel, welded or seamless pipe, of sufficient diameter and wall thickness to support the roll-up of curtain without distortion of slats and limit barrel deflection to not more than 0.03" per foot of span under full load.

    b. Provide spring balance of one or more oil-tempered, heat treated steel helical torsion springs. Size springs to counterbalance the weight of the

curtain, with uniform adjustment accessible from outside barrel. Provide cast steel barrel plugs to secure ends of springs to the barrel and the shaft.

(1) Provide long-life, high cycle springs.

c. Fabricate torsion rod for counterbalance shaft of case-hardened steel, of required size to hold the fixed spring ends and carry the torsional load.

E. Brackets:

1. Provide mounting brackets of manufacturer's standard design, either cast iron or cold-rolled steel plate with bell-mouth guide groove for curtain.

F. Hood:

1. Form to entirely enclose coiled curtain and operating mechanism at opening head and act as a weather seal. Contour to suit end brackets to which hood is attached. Roll and reinforce top and bottom edges for stiffness. Provide closed ends for surface-mounted hood, and any portion of between-jamb mounting projecting beyond wall face. Provide intermediate support brackets as required to prevent sag.

2. Material:

a. 24 gauge, hot dip galvanized steel sheet with G90 zinc coating, complying with ASTM A 525. Phosphate treat before fabrication.

2.02 PAINTING

A. Shop clean and prime ferrous metal and galvanized surfaces, exposed and unexposed, except faying and lubricated surfaces, with door manufacturer's standard rust-inhibitive primer drying to a flat sheen.

2.03 ELECTRIC DOOR OPERATORS

A. General: Furnish electric door operator assembly complete with electric motor and factory-prewired motor controls, gear reduction units, solenoid operated brake, clutch, remote control stations, and control devices.

B. Provide a hand-operator disconnect or a mechanism for automatically engaging a sprocket and chain operator and releasing brake for emergency manual operation. Mount disconnect and operator so that they are accessible from floor level. Include an interlock device to automatically prevent the motor from operating when emergency operator is engaged.

C. Door Operator Type:

1. Provide wall or bracket-mounted door operator units consisting of an electric motor, worm gear drive from motor to reduction gear box, a chain or worm gear drive from reduction box to a gear wheel mounted on the counterbalance shaft, and a quick-clutch disconnect-release for manual operation. Provide motor, clutch, and drive assembly of horsepower and design as determined by the door manufacturer for the size of door required and as herein specified.

D. Electric Motors:

1. Provide high-starting torque, reversible, constant duty, Class A insulated electric motors with overload protection, sized to move door in either direction, from any position, at not less than 2/3 ft. nor more than 1 ft. per second.

a. Furnish open-drip-proof type (NEMA Type 1,) unless otherwise indicated.

b. Coordinate wiring requirements and current characteristics of motors with the building electrical system; see Division 16 sections of the specifications.

c. Electrical Requirements: 460 volt 3 phase, 1-1/2 HP motors.

E. Remote Control Station:

1. Provide momentary-contact, 3-button control station with push-button controls labeled "open," "close" and "stop."

a. Provide interior units, full-guarded type, surface-mounted, heavy-duty, with general purpose NEMA 1 enclosure.

F. Automatic Reversing Control:

1. Furnish each door with an automatic safety switch, extending full width of door bottom, and located within a U-shaped neoprene or rubber astragal mounted to the bottom door rail. Contact with switch before fully closing will immediately stop the downward travel and reverse direction to the fully opened position. Connect to the control circuit through a retracting safety cord and reel.

2.04 LOCKING

A. Locking with provision for padlocks shall be by means of the following:

1. Provide slide bolts with electric motor interlocks.

PART 3 - EXECUTION

3.01 INSTALLATION

A. Install door and operating equipment complete with necessary hardware, in accordance with final shop drawings, manufacturer's instructions, and as specified herein.

B. Upon completion of installation including work by other trades, test and adjust doors to operate easily, free from warp, twist or distortion.

END OF SECTION

SECTION 08365

VERTICAL LIFT DOORS

PART 1 - GENERAL

1.01 RELATED DOCUMENTS

A. Drawings and general provisions of Contract, including General and Supplementary Conditions and Division-1 Specification sections, apply to work of this section.

1.02 DESCRIPTION

A. Motor operated, heavy duty, multisection, vertical lift doors.

1.03 QUALITY ASSURANCE

A. Furnish each vertical lift door as a complete unit produced by one manufacturer, including hardware, accessories, operators, mounting and installation components.

B. Furnish vertical lift doors by one manufacturer for the entire project.

C. Provide vertical lift doors by one of the following:

1. Electric Power Door, Division of Broncho Company.

2. Door Engineering and Manufacturing Company.

3. Ferguson Door Company.

4. International Door, Inc.

1.04 SUBMITTALS

A. Submit manufacturer's product data, rough-in diagrams, and installation instructions for vertical lift doors. Include operating instructions and maintenance information.

B. Submit shop drawings showing construction details, clearance requirements, metal guages, finishes, electrical requirements and design data.

1.05 PERFORMANCE CRITERIA

A. Doors shall be designed such that they will deflect not more than L/120 of their span under a minimum wind load of 20 pounds per square foot. Door components shall be designed in accordance with the following specifications of latest edition.

1. Shapes, Plates, and Bars -- AISC Specification for the design, fabrication, and erection of structural steel for buildings.

2. Sheet or Strip Metal -- AISI Specification for the design of cold-formed steel structural members.

1.06 JOB CONDITIONS

A. Provide setting drawings, templates, instructions and directions for installation of anchorage devices. Coordinate delivery with other work to avoid delay.

PART 2 - PRODUCTS

2.01 MATERIALS

A. Structural Shapes and Plates: ASTM A36

B. Castings, Cast Iron: ASTM A48.

C. Wire Rope: Improved Plow Steel 6 x 37 IWRC.

D. Weatherstripping: Wind-lock seals to be dual durometer with flexibility to -40°

E. Face Sheets: Steel sheet metal, Flat, Hot Rolled 14 gauge minimum.

2.02 FABRICATION

A. Door Construction:

1. Door frames (leaves) shall be constructed of standard structural steel sections of ample size and strength for loads and stresses imposed under the specified conditions. Frames shall be of welded construction and all joints shall develop the full strength of the framing members. Doors shall be sheeted on both sides with 14 gauge flat hot rolled steel which is welded to door frame. Welds to be 9" O.C. Frame members shall be true to dimension and square in all directions. Door frame shall not be bowed, warped, or out of line by more than 1/8" in 20 feet. Exposed welds and welds which interfere with the installation of various parts shall be ground smooth. Leaf sections shall be factory assembled.

2. Formed Plate Guides: Door guide assemblies shall consist of a series of structural shapes and arranged as shown on the plans. Guide assemblies shall

be fabricated for field bolting or welding to the structural framing as required for a rigid installation. Minimum thickness of the door guide materials shall be 3/16".

3. Counterweights: Steel plate sectional counterweights shall be provided to properly balance door leaves for easy operation. Cast iron counterweight will not be allowed. The counterweight shall be contained in a steel plate box which is suspended on cables attached to the doors operating over cast iron sheaves. Counter-weight box shall be guided throughout the full height of travel by a counterweight enclosure (tower) with internal guides.

   a. The counterweight tower shall be covered with 14 gauge steel to a height of 8'-0" minimum above the finished door. Counterweight tower material shall be 3/16" minimum.

B. Hardware:

1. Provide hardware necessary for a complete installation. Hardware shall be heavy-duty type, including all bolts and fittings for the hardware as follows:

   a. Guide Rollers: The doors shall have a minimum of eight antifriction bearing guide rollers per panel. Two guide rollers at each corner shall engage single angle steel door guides and guide the panels up and down. The guide rollers shall be of sufficient size to transmit the windload from the door panel to the steel door guides. Metal to metal sliding guides are not allowed.

   b. Cable System: Leaves shall be placed one behind the other with vertical travel so arranged that all leaves shall start to move at the same time, travel at differential speeds and arrive at their fully opened or closed position simultaneously. Provide all necessary wire rope, sheave assemblies, and fittings to make this system operable. Panel sheaves shall be mounted on the interior of the panel with easy access by removable covers. Wire ropes shall be designed to sustain the dead weight of door leaves plus 25% impact allowance with minimum safety factor of five. The ends of the wire ropes at door leaves shall be equipped with turnbuckles of other means for independent adjustment.

   c. Weathering: Special wind lock seals to be dual durometer with flexibility to -40° F. They shall be push-on type with built-in wear strip. No external fasteners allowed. Air leakage not to exceed .42 CFM per linear foot of seal with a 25 MPH wind.

   d. Operating Unit: Doors shall be suspended on wire ropes reeved from leaves over traction sheaves to counterweights. Traction sheaves shall be driven by motor operators mounted at top of tower with auxiliary hand

crank operation. Pull required on hand crank to open the door shall not exceed 20 pounds. Electric power operators shall be complete with electric gear motor, magnetic brake, brackets, pushbutton controls, limit switches, magnetic reversing starters and other accessories specified and required. The power operator shall be designed such that the gear motor may be removed without disturbing the limit switch setting and without affecting the emergency auxiliary operators. Provisions shall be made for immediate emergency manual operation of door in the event of electrical failure. The emergency operating mechanism shall be arranged such that it can be placed in and out of operation from the floor and its use shall not affect the timing of the limit switches.

Manual operation shall be by means of a hand crank connected to the drive system by a roller chain drive. A manual interlock switch shall be provided to disconnect the motor when the manual operating hand crank is engaged. Emergency operation of door by operating through the gearing is not permitted.

(1) Gearmotors: Motors shall be high-starting torque type, of sufficient horsepower and torque output to move door in either direction from any position and produce a door travel speed of not less than two-thirds, nor more than one foot per second, without exceeding the rated capacity. Motors shall be equipped with a magnetic brake. Motors shall conform to NEMA standards and shall be suitable for operation on 460V, 3 phase, 60 hertz current.

(2) Pushbuttons: Pushbuttons shall be located on the interior of the building where shown and shall be the three-button type, with the buttons marked "OPEN', "CLOSE", and "STOP". The "OPEN" button shall be of the type requiring only momentary pressure by the operator to cause the door to go from the closed to the fully open position. The "CLOSE" button shall require constant pressure from the operator to maintain the closing motion of the door. When the door is in motion and the "STOP" button is pressed, the door shall stop instantly and remain in the stop position; from the stop position, the door may then be operated in either direction by pushing the "OPEN" or "CLOSE" button. Pushbuttons shall be NEMA rated for the environment specified.

(3) Control Panel: Each door shall be furnished with a NEMA 12 control panel enclosure housing a reversing, across-the-line type magnetic motor starter having thermal-overload protection. The control panels shall contain relays, fuses, terminal strips, and other electronic components as required and necessary to provide the specified operating sequences. All components shall be prewired to the terminal strip and neatly labeled. Power circuits in excess of 200 volts shall be

provided with control transformers to reduce voltage on the control circuit to 120 volts.

(4) Limit Switches: Shall be NEMA rated snap-action type with an adjustable roller arm. Open, close, and reversing edge limit shall be mounted on the door counterweight tower and activated by a cam attached to the lower door panel. The motor operator limit switch shall be mounted on the operator.

e. Reversing Device: The bottom edge of the lower leaf shall be equipped with a reversing device which will immediately stop and reverse the downward travel of the door upon contact with an obstruction in the door opening. The reversing device shall not substitute for a limit switch.

C. Shop Painting:

1. All structural steel surfaces shall be shop painted with one coat of rust inhibiting primer conforming to Fed. Spec. TT-P-646.

D. Insulation:

1. Door sections shall be insulated with fibrous glass batt-type insulation, providing a U-value of .12 or less. The insulating material shall be fitted to cover the entire interior surface of the door panel.

E. Electrical Work:

1. All wire, conduit, junction boxes, electrical disconnects, field wiring, and mounting of all electrical controls by others under appropriate Sections of Division 16. The door manufacturer shall furnish all the controls (control panel, pushbuttons, limit switches, take-up reel, coil cord, and similar items.

PART 3 - EXECUTION

3.01 Installation

A. Vertical lift doors shall be installed in accordance with the approved shop drawings, and the manufacturers' directions. All anchors and inserts to guides, brackets, motors, and other required work shall be accurately located. Upon completion of the installation, doors shall be free from warp, twist, or distortion and shall be lubricated and properly adjusted to operate freely and smoothly. The installation of the doors shall be by an authorized representative of the door manufacturer. Field wiring and mounting of the electrical components shall be done under the Electrical Sections of the specifications. Door installer shall provide the final adjustments for the limit switches.

END OF SECTION

SECTION 08366

BI-SWING STEEL DOORS

PART 1 - GENERAL

1.01 RELATED DOCUMENTS

A. Drawings and general provisions of Contract, including General and Supplementary Conditions and Division-1 Specification sections, apply to work of this section.

1.02 DESCRIPTION

A. Manually operated bi-swing steel doors constructed of structural steel.

1.03 QUALITY ASSURANCE

A. Furnish each bi-swing door as a complete unit produced by one manufacturer, including hardware, accessories, mounting and installation components.

B. Furnish bi-swing doors by one manufacturer for the entire project.

C. Provide bi-swing doors by one of the following:

1. Electric Power Door, Division of Broncho Company.

2. Door Engineering and Manufacturing Company.

3. Ferguson Door Company

4. International Door, Inc.

1.04 SUBMITTALS

A. Submit manufacturer's product data, rough-in diagrams, and installation instructions for bi-swing doors. Include operating instructions and maintenance information.

B. Submit shop drawings showing construction details, clearance requirements, metal guages, finishes, and design data.

1.05 PERFORMANCE REQUIREMENTS

A. Doors shall be designed such that they will deflect not more than L/120 of their span under a minimum wind load of 20 pounds per square foot. Door components shall be designed in accordance with the following specifications of latest edition.

1. Shapes, Plates, and Bars -- AISC Specification for the design, fabrication, and erection of structural steel for buildings.

2. Sheet or Strip Metal -- AISI Specification for the design of cold-formed steel structural members.

PART 2 - PRODUCTS

2.01 MATERIALS

A. Steel Tubing, Electric Welded: ASTM A513.

B. Structural Shapes and Plates: ASTM A36.

C. Castings, Cast Iron: ASTM A48.

D. Weatherstripping: Cloth Inserted Black Rubber.

E. Face Sheets: Steel Sheet Metal, flat, hot rolled, 14 gauge minimum.

2.02 FABRICATION

A. Door Construction:

1. Door frames (leaves) shall be constructed of standard structural steel, square steel tubing, or rectangular steel tubing sections of ample size and strength for loads and stresses imposed under the specified conditions. Frame shall be of welded construction and all joints shall develop the full strength of the framing members. Doors shall be sheeted on both sides with 14 gauge flat hot rolled steel which is welded to door frame. Welds to be 9" O.C. Frame members shall be true to dimension and square in all directions. Door frame shall not be bowed, warped, or out of line by more than 1/8" in 20 feet. Exposed welds and welds which interfere with the installation of various parts shall be ground smooth.

B. Hardware:

1. Provide hardware necessary for a complete installation. Hardware shall be heavy-duty type, including all bolts and fittings for the hardware as follows:

a. Hinges: Door shall be complete with shop-applied strap hinges. Each hinge shall be supported on timken roller bearings. Hinges shall be through bolted on panel.

b. Hinge Pintles: Jamb hinges shall have continuous 7/8" diameter steel pintle the full height of the opening.

c. Weatherstrip: Provide a sweep consisting of C.I. black rubber held on by aluminum retaining bars at door bottom. Provide bulb-type seals in middle where doors meet. Provide jamb and head seals.

d. Cane Bolts: Provide a cane bolt at door bottom of each door to hold door in closed position.

e. Door Pulls: Provide heavy duty pull handles.

C. Shop Painting:

1. All steel surfaces shall be shop painted with one coat of rust-inhibiting primer conforming to Fed. Spec. TT-P-645.

D. Insulation:

1. Door section shall be insulated with fibrous glass batt-type insulation, providing a U-value of .12 or less. The insulation material shall be fitted tight over the entire surface of the door panel.

PART 3 - EXECUTION

3.01 Installation

A. Bi-Swing Doors shall be installed in accordance with the approved shop drawings, and the manufacturers' directions. All anchors and inserts to guides, brackets, and other required work shall be accurately located. Upon completion of the installation, doors shall be free from warp, twist, or distortion, and shall be lubricated and properly adjusted to operate freely and smoothly. The installation of the doors shall be by an authorized representative of the door manufacturer.

END OF SECTION

SECTION 08395

REVOLVING DARKROOM DOORS

PART 1 - GENERAL

1.01 RELATED DOCUMENTS

A. Drawings and general provisions of Contract, including General and Supplementary Conditions and Division-1 Specification sections, apply to work of this section.

1.02 DESCRIPTION

A. Lightproof revolving darkroom doors.

B. Provide complete units fabricated, assembled and tested for proper operation at the factory. Include wings, enclosure, hardware, and other components standard with manufacturer and as herein specified.

1.03 QUALITY ASSURANCE

A. Provide units produced by a firm with not less than 5 years of successful experience in fabrication of revolving doors, of type required for this project.

B. Coordinate installation of revolving doors with work of other trades. Provide installation templates, inserts, and anchorage devices so as to avoid delays in other work.

C. Acceptable Manufacturer's:

1. Consolidated International Corp.

2. ESECS, Speedmatic

1.04 SUBMITTALS

A. Submit manufacturer's product data, recommendations and standard details for revolving doors, including fabrication, finishing, hardware, accessories and other components of work.

B. Submit shop drawings for fabrication and installation of revolving doors and associated components of work. Show anchors, enclosures, and other components not included in manufacturer's standard data.

C. Submit manufacturer's written instructions for adjustment, operation, and maintenance of revolving door units, including maintenance of metal finishes.

D. Submit manufacturer's complete line of color and wood grain finishes.

PART 2 - PRODUCTS

2.01 MATERIALS

A. Form inner and outer cylinders of 0.032 inch thick aluminum sheet.

B. Light Seals: Felt light seals, removable without the use of special tools.

C. Finish:

1. Interior: Manufacturer's standard flat black.

2. Exterior: As selected by Sandia Delegated Representative from manufacturer's complete line of color and wood grain finishes.

2.02 FABRICATION

A. Door types required: ***{Insert size, type, and model number of doors required}***

1. 2-way: 48" x 82" - Model 300 STH by Consolidated International

2. 2-way: 40" x 82" - Model 200 STH by Consolidated International

B. Suspend inner cylinder from a center thrust bearing at the top with alignment maintained by means of rubber covered roller bearing at the bottom, riding on a steel angle guide ring.

C. Use sealant to bed components and seal cracks. Use of tape to cover cracks is prohibited.

D. Provide safety hinged hardware for emergency exit and equipment movement.

PART 3 - EXECUTION

3.01 INSTALLATION

A. Install on top of finish floor within metal frame in accordance with the manufacturer's printed instructions and installation drawings.

B. Completed assembly shall be lightproof.

C. The inner assembly shall revolve noiselessly and easily from one opening to the next with no possibility of jamming.

D. Do not install members which are warped, bowed, deformed, or otherwise damaged or defaced to such extent as to impair strength or appearance. Remove and replace members, as directed, which have been damaged during installation.

E. Set units level, plumb, and true to line, with uniform hairline joints.

F. Paint concealed contact surfaces of dissimilar materials, including metal in contact with masonry or concrete work, with a heavy coating of bituminous paint, or provide other separation as recommended by manufacturer.

END OF SECTION

SECTION 08410

ALUMINUM ENTRANCES AND STOREFRONT

PART 1 - GENERAL

1.01 RELATED DOCUMENTS

A. Drawings and general provisions of Contract, including General and Supplementary Conditions and Division-1 Specification sections, apply to work of this section.

1.02 DESCRIPTION

A. The following types of aluminum doors and frames are required:

1. Entrance doors (exterior).

2. Frames for exterior entrances.

3. Frames for exterior glazed panels.

1.03 QUALITY ASSURANCE

A. Standards: Comply with requirements and recommendations in applicable specifications and standards by NAAMM, AAMA and AA, including the terminology definitions and specifically including the "Entrance Manual" by NAAMM, except to the extent more stringent requirements are indicated.

B. Provide entrance doors, and storefront manufactured by a single firm specializing in the production of this type of work.

C. Drawings are based on one manufacturer's standard aluminum entrance and storefront system. Another standard system of a similar and equivalent nature will be acceptable when differences do not detract from design concept or specified performances. Dimensional changes necessitated by the use of an alternate system shall be coordinated by the Contractor and shall be shown on shop drawings.

D. Acceptable Manufacturers:

1. Kawneer

2. Amarlite

3. United States Aluminum Corp.

4. Atlas Architectural Metals, Inc.

5. Tubelite Indal

1.04 DESIGN CONDITIONS

A. Entrances and storefront shall include steel reinforcing as required to maintain a maximum deflection of L/175 with a wind load as indicated below.

B. The metal framing shall hold the glass firmly and yet remain sufficiently flexible to permit movement of the metal and glass caused by deflection due to wind pressure and expansion and contraction resulting from changes in temperatures. Window walls shall be watertight under all design conditions.

1.05 PERFORMANCE

A. Wind Loading: Provide exterior components which have been tested in accordance with ASTM E 330 to withstand the following:

1. Uniform pressure of 30 psf inward and 30 psf outward with a maximum deflection of L/175.

B. Minimum Glazing Requirements:

1. Minimum Frame Lap: 5/16"

2. Minimum Glass Edge Clearance: 3/8"

C. Weather Resistance: Fabricate exterior storefront components which have been tested to demonstrate permanent resistance to leakages as follows with test pressure differential of 20% of design loading (excluding operable door edges).

1. Air infiltration: Not more than 0.06 cfm per square foot, tested in accordance with ASTM E 283.

2. Water infiltration: No uncontrolled water penetration, tested in accordance with ASTM E 331.

1.06 SUBMITTALS

A. Submit manufacturer's data, recommendations and standard details for aluminum entrances sloped glazing and storefront, including fabrication, finishing, hardware, accessories and other components of the work.

B. Submit shop drawings for the fabrication and installation of aluminum entrances and storefront, and associated components of the work. Include wall elevations at 1/2" scale, and half-size detail sections of every typical composite member. Show anchors, joint system, expansion provisions and other components not included in manufacturer's standard data. Include glazing details.

C. Submit sample of each required aluminum finish on 12" long extrusions of the alloys to be used for the work.

PART 2 - PRODUCTS

2.01 MATERIALS

A. Provide main extrusions of not less than 0.125" wall thickness.

B. Provide extruded glazing stops and other applied trim extrusions with minimum wall thickness of 0.062".

C. Aluminum Alloy: No. 6063-T5.

D. Fasteners: Aluminum, nonmagnetic stainless steel or other non-corrosive metal fasteners guaranteed by the manufacturer to be compatible with doors, frames, stops, panels, hardware, anchors and other items being fastened.

E. Steel Reinforcement and Brackets: Manufacturer's standard formed or fabricated steel units, of shapes, plates or bars; with 2.0 oz. hot-dip zinc coating complying with ASTM A 125, applied after fabrication.

F. Inserts: For required anchorage into concrete work, furnish inserts of cast iron, malleable iron or 12 gauge steel hot-dip galvanized after fabrication.

G. Expansion Anchor Devices: Wedge anchor or toothed-steel, drilled-in, expansion bolt anchors.

H. Bituminous Coatings: Cold-applied asphalt mastic complying with SSPC-PS 12, compounded for 30-mil thickness per coat.

I. Compression Weatherstripping: Provide manufacturer's standard replaceable stripping of either molded neoprene gaskets complying with ASTM D 2000, Designation 2BC415 to 3BC620, or molded PVC gaskets complying with ASTM D2287. Compression gaskets include gaskets in bottom rails of doors (sill

gaskets) and collapsible finger guards at pivot jambs as well as bumper-type gaskets at door stops and laps.

J. Sealants and Gaskets: Provide sealants and gaskets in the fabrication, assembly and installation of the work, which are recommended and guaranteed by the manufacturer to remain permanently elastic, non-shrinking, nonmigrating and weatherproof for the life of the building.

2.02 STOREFRONT

A. The vertical members shall run continuously and be secured with steel angle clips. Horizontal members shall be of sizes indicated, cut between verticals and fastened securely thereto. Provide at proper intervals vertical expansion joints as recommended by the manufacturer in keeping with the design of the window wall. Horizontal expansion shall be provided for at each horizontal to vertical joint.

B. Members shall be accurately fitted and mechanically attached by means of screws or other approved fasteners. Screws shall be firmly seated. Connections securing the window wall to the building structure shall be so designed that the window wall framing can be properly plumbed and aligned to compensate for variations in the substructure of the building.

2.03 ALUMINUM DOORS

A. Thickness: 1-3/4".

B. Style: 8" wide stiles.

C. Stiles & Rails: Tubular; wall thickness of 0.125" minimum.

D. Glazing Beads: Wall thickness of 0.050" minimum.

E. Corner Construction: Concealed reinforcement brackets and shall be MIG welded. No exposed screws shall be permitted.

F. Glazing Beads: Vinyl inserts for puttyless glazing.

2.04 HARDWARE

A. Refer Section 08710.

B. Receive the hardware supplied in accordance with the Section 08710 sections, and coordinate with the hardware requirements of this section. Report discrepancies (in writing) to the Contractor.

C. Cut, reinforce, drill and tap frames and doors as required to receive hardware, except do not drill and tap for surface-mounted items until the time of installation at the project site. Comply with hardware manufacturer's instructions and template requirements. Use concealed fasteners wherever possible.

2.05 FINISH

A. Fluorocarbon Finish:

1. Doors, and storefront shall have a two coat system of baked-on epoxy primer with fluorocarbon polymeric finish coat.

2. Nonexposed aluminum shall be mill finish.

3. Fluoropolymer finish shall be applied as recommended by the manufacturer of the resin and the paint formulator licensed by the resin manufacturer. The formulation shall have at least 70% resin in the residual solids. Application in pretreatment and finishing shall provide optimum quality available as stated by the resin and paint formulator manufacturers.

4. Pretreatment conversion coating shall conform to ASTM D1730-67 type B. Coating weight shall conform with that specified in ASTM B449-67 class 1. Coating thickness shall range between 30-100 mgm per sq. ft.

5. Finish coating shall consist of a primer having a dry film thickness of 0.3 mil (plus or minus 0.1 mil) and a top coat with a dry film thickness of 1.0 mil minimum on exposed surfaces properly cured.

6. Color: Refer Color Schedule, Section 09900A.

PART 3 - EXECUTION

3.01 INSTALLATION - ERECTION

A. General:

1. Do not install component parts which are observed to be defective including warped, bowed, dented, abraded and broken members, and including glass with edge damage. Remove and replace members which have been damaged during installation or thereafter before time of acceptance.

2. Do not cut, trim, weld or braze component parts during erection, in a manner which would damage finish, decrease strength, or result in a visual imperfection or a failure in performance of window wall. Return component

parts which require alteration to shop for refabrication, if possible, or for replacement by new parts.

3. Install component parts level, plumb, true to line and with uniform joints and reveals. Secure to structure with nonstaining and non-corrosive shims, anchors, fasteners, spacers and fillers. Use erection equipment which will not mar or stain finished surfaces, and will not damage component parts.

B. Erection Tolerances:

1. Limit variations from plumb, level or dimensioned angle to the following:

a. 1/8" maximum deviation in story height, or in 10' vertical or angular run, or in 20' horizontal run.

b. 1/4" maximum deviation in 40' run, any direction.

2. Limit variations from location (theoretical calculated positions in plan or evaluation based on established floor lines and column lines), including variations from plumb and level, to the following:

a. 3/8" total maximum deviation for member at any location.

b. 1/8" maximum change in deviation for member for 10' run, any direction.

3. Limit offsets in end-to-end and edge-to-edge alignment of adjoining and consecutive members, which form planes, continuous runs and profiles, to the following:

a. 1/8" maximum offset in alignments which are to be out-of-flush by more than 1/2" or separated by a reveal of protrusion of more than 2" width.

C. Assembly and anchorage:

1. Anchor component parts securely in place as shown by bolting, welding or other permanent mechanical attachment system, which will comply with performance requirements and permit movements as intended or necessary. Install slip-joint linings where possible to ensure movement as intended or necessary.

2. Apply a bituminous coating of approximately 30-mil dry film thickness or other suitable permanent separator or concealed contact surfaces of dissimilar materials, before assembly or installation where there is possibility of corrosive or electrolytic action.

3.02 CLEANING

A. Clean completed system inside and out, promptly after erection and installation of glass and sealants. Remove excess glazing and sealant compounds, dirt and other substances from aluminum surface.

END OF SECTION

SECTION 08710

FINISH HARDWARE

PART 1 - GENERAL

1.01 RELATED DOCUMENTS

A. Drawings and general provisions of Contract, including General and Supplementary Conditions and Division-1 Specification sections, apply to work of this section.

1.02 DESCRIPTION

A. The extent of the hardware is shown on the drawings and in schedules. The required types of hardware include, but are not necessarily limited to, the following:

1. Hinges
2. Pivots
3. Lock cylinders and keys
4. Lock and latch sets
5. Bolts
6. Exit devices
7. Push/pull units
8. Sliding door equipment
9. Closers
10. Overhead holders
11. Door control devices
12. Door trim units
13. Protection plates
14. Stripping and seals

15. Thresholds

16. Security products

17. Shelf supports

18. Cabinet hardware

19. Removable mullions

1.03 QUALITY ASSURANCE

A. Obtain each kind of hardware from only one manufacturer, even though several may be specified as acceptable manufacturers.

B. Supplier: A recognized architectural finish hardware supplier, with warehousing facilities, who has been furnishing hardware in the project vicinity for a period of not less than 2 years and who is, or who employs an experienced architectural hardware consultant who is available during the course of the work, for consultation about project's hardware requirements, to Sandia, Sandia Delegated Representative and Contractor.

C. Fire-Rated Openings:

1. Provide hardware complying with NFPA 80.

2. Provide hardware tested and listed by UL or FM for the types and sizes of doors required and complies with the requirements of the door and door frame labels.

3. Where emergency exit devices are required on fire rated doors, provide supplementary marking on door UL label indicating "Fire Door to be Equipped with Fire Exit Hardware," and provide UL label on exit device indicating "Fire Exit Hardware."

1.04 SUBMITTALS

A. Submit manufacturers technical information for each item of hardware. Include whatever information may be necessary to show compliance with requirements.

B. Submit final and coordinated hardware schedule in manner indicated below. Coordinate hardware with doors, frames and related work to ensure proper size, thickness, hand, function and finish of hardware.

1. Schedule Content: Organize hardware schedule into "hardware sets" indicating complete designations of every item required for each door or opening. Include the following information:

    a. Type, style, function, size and finish of each hardware item.

    b. Name and manufacturer of each item.

    c. Fastenings and other pertinent information.

    d. Location of hardware set cross-referenced to indications on drawings both on floor plans and in door and frame schedule.

    e. Explanation of abbreviations, symbols and codes contained in schedule.

    f. Mounting locations for hardware.

1.05 PRODUCT HANDLING

A. Packaging of hardware, on a set by set basis, is the responsibility of the supplier. As material is received by the hardware supplier from the various manufacturers, sort and repackage in containers marked with the hardware set number. Two or more identical sets may be packed in the same container.

B. Inventory hardware jointly with representatives of the hardware supplier and the hardware installer until each is satisfied that the count is correct.

1.06 JOB CONDITIONS

A. Coordination: Coordinate hardware with other work. Tag each item or package separately, with identification related to the final hardware schedule, and include basic installation instructions in the package. Furnish hardware items of proper design for use on doors and frames of the thicknesses, profile, swing, security and similar requirements indicated, as necessary for proper installation and function. Deliver individually packaged hardware items at the proper times to the proper locations (shop or project site) for installation.

B. Templates: Furnish hardware templates to each fabricator of doors, frames and other work to be factory-prepared for the installation of hardware. Upon request, check the shop drawings of such other work, to confirm that adequate provisions are made for the proper installation of hardware.

C. Provide secure lock-up for hardware delivered to the project, but not yet installed. Control handling and installation of hardware items which are not immediately replaceable, so that completion of the work will not be delayed by hardware losses, both before and after installation.

PART 2 - PRODUCTS

2.01 MATERIALS AND FABRICATIONS

A. General:

1. Drawings show direction of slide, swing or hand of each door leaf. Furnish each item of hardware for proper installation of operation of door movement as shown.

2. Do not use manufacturer's products which have manufacturer's name or trade name displayed in a visible location (omit removable nameplates), except in conjunction with required UL labels and as otherwise acceptable to Sandia.

a. Manufacturer's identification will be permitted on rim of lock cylinders only.

3. Fasteners: Provide hardware manufactured to conform to published templates, generally prepared for machine screw installation. Do not provide hardware which has been prepared for self-tapping sheet metal screws, except as specifically indicated.

4. Furnish screws for installation, with each hardware item. Provide Phillips flat-head screws except as otherwise indicated. Finish exposed (exposed under any condition) screws to match hardware finish, or, if exposed in surfaces of other work, to match finish of such other work as closely as possible, including "prepared to paint" in surfaces to receive painted finish.

5. Provide concealed fasteners for hardware units which are exposed when door is closed, except to extent no standard units of type specified are available with concealed fasteners.

B. Hinges, Butts and Pivots:

1. Templates: Except for hinges and pivots to be installed entirely (both leaves) into wood doors and frames, provide only template-produced units.

2. Screws: Furnish Phillips flat-head or machine screws for installation of units, except furnish Phillips flat-head or wood screws for installation of units into wood. Finish screw heads to match surface of hinges or pivots.

3. Hinge Pins: Except as otherwise indicated, provide hinge pins as follows:

a. Steel Hinges: Steel pins.

b. Non-Ferrous Hinges: Stainless steel pins.

c. Exterior Doors: Non-removable pins.

d. Interior Doors: Non-rising pins.

e. Tips:

(1) Flat button and matching plug.

4. Number of Hinges: Provide number of hinges indicated but not less than 3 hinges for door leaf for doors 90" or less in height and one additional hinge for each 30" of additional height.

C. Door Silencers: GJ-64 or GJ-65 installed on each door frame. Apply three for single doors and four for pairs of doors.

2.02 KEYING

A. General: Sandia will provide keying.

B. Cylinders: Sandia will key cylinders provided by Contractor. All cylinders shall have 6 pin, 9N keyway.

2.03 LOCKS, LATCHES AND BOLTS

A. Sandia will provide cylindrical and mortised locksets and latchsets, Russwin 400 Series with 2-3/4" backset and 7000 Series, for installation by Contractor.

B. Strikes: Provided with locksets and latchsets and will be ANSI 115.1-2, 1-1/4" x 4-7/8", with curved lip extended to protect frame, finished to match hardware set.

1. Provide dust-proof strikes for foot bolts, except where special threshold construction provides non-recessed strike for bolt.

2. Provide roller type strikes Glynn Johnson - 32 at push-pull doors.

3. Electric strikes will be furnished and installed by Contractor. Verify mullion width required for back-to-back strike installation.

C. Lock Throw: Provide 5/8" minimum throw of latchbolt and 1" throw of deadbolt used on pairs of doors. Comply with UL requirements for throw of bolts and latch bolts on rated fire openings.

D. Flush Bolt Heads: Minimum of 1/2" diameter rods of brass, bronze or stainless steel, with minimum 12" long rod for doors up to 7'-0" in height. Provide longer rods as scheduled for doors exceeding 7'-0" in height.

E. Exit Device Dogging: Except on fire-rated doors, wherever closers are provided on doors equipped with exit devices, equip the units with keyed dogging device to hold the push bar down and the latch bolt in the open position.

2.04 DOOR TRIM UNITS

A. Fasteners: Provide manufacturer's standard exposed fasteners for door trim units, either machine screws or self-tapping screw.

B. Fabricate protection plates (armor, kick or mop) not more than 1-1/2" less than door width on stop side and not more than 1/2" less than door width on pull side, x the height indicated.

1. Metal Plates: Stainless steel, .050" (U.S. 18 ga.).

2.05 WEATHERSTRIPPING

A. Provide continuous weatherstripping at each edge of every exterior door leaf. Provide type, sizes and profiles scheduled. Provide non-corrosive fasteners as recommended by manufacturer for application indicated.

2.06 HARDWARE FINISHES

A. Provide matching finishes for hardware units at each door or opening, to the greatest extent possible, and except as otherwise indicated. Reduce differences in color and textures as much as commercially possible where the base metal or metal forming process is different for individual units of hardware exposed at the same door or opening. In general, match items to the manufacturer's standard finish for the latch and lock set (or push-pull units if no latch-lock sets) for color and texture.

B. The designations used in schedules and elsewhere to indicate hardware finish are the industry-recognized traditional U.S. finishes, except as otherwise noted.

C. Standard Finish: US10 - Satin bronze.

PART 3 - EXECUTION

3.01 INSTALLATION

A. Hardware Mounting Heights:

1. Mount hardware units at heights indicated in "Recommended Locations for Builders Hardware" or Custom Steel Doors and Frames" by the Door and

Hardware Institute, except or otherwise specifically indicated or required to comply with governing regulations.

B. Requirements for the Handicapped:

1. Handles shall be mounted 38 inches above finish floor.

2. Panic devices shall be mounted 32 inches above finish floor.

3. Doors leading to dangerous areas such as mechanical equipment rooms, loading platforms, electrical rooms, stairs, fire escapes, shall identified by the use of knurled handles or knobs.

4. Thresholds shall be flush with the floor or beveled gradually from both sides. Thresholds shall not have raised stops.

5. Kickplates shall be a minimum of 16" high on doors.

C. Set units level, plumb and true to line and location. Adjust and reinforce the attachment substrate as necessary for proper installation and operation.

D. Drill and countersink units which are not factory-prepared for anchorage fasteners. Space fasteners and anchors in accordance with industry standards.

E. Set thresholds for exterior doors in full bed of sealant.

3.02 ADJUST AND CLEAN

A. Adjust and check each operating item of hardware and each door, to ensure proper operation or function of every unit. Replace units which cannot be adjusted to operate freely and smoothly as intended for the application made.

B. Clean adjacent surfaces soiled by hardware installation.

C. Final Adjustment: Wherever hardware installation is made more than one month prior to acceptance or occupancy of a space or area, return to the work during the week prior to acceptance or occupancy, and make a final check and adjustment of all hardware items in such space or area. Clean operating items as necessary to restore proper function and finish of hardware and doors. Adjust door control devices to compensate for final operation of heating and ventilating equipment.

D. Continued Maintenance Service: Approximately six months after the acceptance of hardware in each area, the Installer shall return to the project and re-adjust every item of hardware to restore proper function of doors and hardware. Consult with and instruct Sandia's personnel in recommended additions to the maintenance procedures. Replace hardware items which have deteriorated or failed due to faulty design,

materials or installation of hardware units. Prepare a written report of current and predictable problems (of substantial nature) in the performance of the hardware.

3.03 SCHEDULE

A. Except as otherwise specifically noted in the specifications, the products listed by name are not intended to exclude the products of other manufacturers of equal quality for the purpose stated. The manufacturer's names listed are for a guide as to type required and all such hardware furnished shall meet these standards as far as quality, weight, finish and design.

B. If hardware for a particular location is not listed or described, it shall be furnished and shall be as specified for similar locations. Omissions and discrepancies shall be brought to the attention of the Sandia Delegated Representative immediately.

C. Schedule: ***{Sample Hardware Sets}***

HARDWARE SET #1

2 ea Floor Closers	***PH27 with top pivots***	***Rixson***
2 pr Intermediate Pivots	***M19 x US10***	***Rixson***
1 ea Removable Mullion	***5654 x SDB***	***Von Duprin***
2 ea Strikes	***299***	***Von Duprin***
2 ea Exit Devices	***CD33L x US10AN***	***Von Duprin***
1 ea Threshold	***257A/259A x Door Width***	***Pemko***
2 ea Stops	***444 x US10***	***Ives***

HARDWARE SET #2

2 pr Hinges	***BB1191 - 4 1/2 x 4 1/2 x US10***	***Hager***
1 ea Lockset	***440 5/8***	***Russwin***
1 ea Closer	***J1604H x DB***	***Norton***
1 set Stripping	***315DR - Head and Jambs***	***Pemko***
1 Door Bottom	***434AR***	***Pemko***
1 ea Threshold	***151A***	***Pemko***

HARDWARE SET #3

4 pr Hinges	***BB1191 - 4 1/2 x 4 1/2 x US10***	***Hager***
1 ea Lockset	***452***	***Russwin***
1 set Flush Bolts	***258 x 12" x US10***	***Ives***
2 ea Holders	***380HD x US10***	***Glynn***
Johnson		

HARDWARE SET #4

2 pr Hinges	*BB1191 - 4 1/2 x 4 1/2 x US10*	*Hager*
1 ea Lockset	*452*	*Russwin*
1 ea Holder Johnson	*380HD x US10*	*Glynn*

HARDWARE SET #5

2 pr Hinges	*BB1191 - 4 1/2 x 4 1/2 x US10*	*Hager*
1 ea Closer	*P1684 x DB*	*Norton*
1 ea Push Plate	*No. 40 - 3 1/2 x 15 - US10*	*Quality*
1 ea Pull Plate	*No. 1515 - 3 1/2 x 15 - US10*	*Quality*
1 ea Kick Plate	*No. 48 x 10"*	*Quality*
1 ea Stop	*407 x US10*	*Ives*
1 ea Roller latch Johnson	*32 x US10*	*Glynn*

HARDWARE SET #6

2 pr Hinges	*BB1191 - 4 1/2 x 4 1/2 x US10*	*Hager*
1 ea Lockset	*452*	*Russwin*
1 ea Stop	*407 x US10*	*Ives*
1 ea Kickplate	*No. 58 x 10"*	*Quality*

HARDWARE SET #7

1 1/2 pr Hinges	*BB1191 - 4 1/2 x 4 1/2 x US10*	*Hager*
1 ea Lockset	*440 5/8 - Reversed*	*Russwin*
1 ea Closer	*J1604H x DB*	*Norton*
1 ea Threshold	*272A*	*Pemko*
1 ea Door Shoe	*216DV*	*Pemko*
1 set Stripping	*315DR Head & Jambs*	*Pemko*
1 ea Door Top	*346A*	*Pemko*

HARDWARE SET #8

4 pr Hinges	*BB1191 - 4 1/2 x 4 1/2 x US10*	*Hager*
1 ea Removable Mullion	*4854/3031/299 x 5 conductor*	*Von Duprin*
1 ea Exit Device	*33L x US10AN*	*Von Duprin*
1 ea Exit Device	*33EO x US10AN*	*Von Duprin*
2 ea Closers	*J1604 x DB*	*Norton*
2 Stops	*436 x US10*	*Ives*

END OF SECTION

SECTION 08800

GLAZING

PART 1 - GENERAL

1.01 RELATED DOCUMENTS

A. Drawings and general provisions of Contract, including General and Supplementary Conditions and Division-1 Specification sections, apply to work of this section.

1.02 DESCRIPTION

A. The types of glazing required include, but are not necessarily limited to, the following:

1. Exterior window wall

2. Storefront

3. Entrance doors

4. Interior partitions

5. Mirrors

1.03 QUALITY ASSURANCE

A. Manufacturers: Firms with not less than 5 years of successful experience in production of types of glazing materials required.

B. Standards: Comply with recommendations of Flat Glass Marketing Association Glazing Manual and Sealant Manual except where more stringent requirements are indicated.

C. Provide safety glass where indicated. Provide type of products indicated which comply with ANSI Z97.1 and testing requirements of 16 CFR Part 1201 for category II materials.

1.04 SUBMITTALS

A. Submit manufacturer's specifications, recommendations and installation instructions for each type of glazing sealant and compound, gasket and accessory material required.

1. Provide documentation that setting blocks and spacers are compatible with sealant.

1.05 JOB CONDITIONS

A. Do not proceed with glazing when ambient and substrate temperature conditions are outside the limits permitted by glazing material manufacturer or when joint substrates are wet due to rain, frost, condensation or other causes. Install glazing sealants only when temperatures are in middle third of manufacturer's recommended installation temperature range.

PART 2 - PRODUCTS

2.01 MATERIALS

A. General:

1. Colors: Provide black or other natural color where no other color is available. Where material is not exposed to view, provide manufacturer's standard color which has the best overall performance characteristics for application shown.

B. Setting Materials:

1. General:

a. The use of nonskinning compound, nonresilient type preformed sealers and preformed impregnated type gaskets will not be permitted.

b. Metal sash putty will not be permitted.

c. Materials used with aluminum frames shall match the frame color, be nonstaining and not require painting.

2. Glazing Sealants:

a. For heel bead on exterior glazing and full bed on exterior door lights provide:

(1) Polysulfide-based, 2-part elastomeric sealant, complying with FS TT-S-00227, Class A, Type 2.

b. For interior and exterior face beads on exterior glazing provide:

(1) One-part silicone rubber elastomeric sealant, complying with FS TT-S-001543, Class A; Dow Corning 999 or approved equal.

c. For interior glazing only provide:

(1) Emulsion of acrylic, with or without latex rubber modification; compounded specifically for glazing; nonhardening, non-staining and nonbleeding.

3. Glazing Gaskets:

a. Molded Neoprene Glazing Gaskets: Molded or extruded neoprene gaskets of the profile and hardness required for watertight construction; comply with ASTM D 2000 designation 2BC 415 to 3BC 620, black.

b. Interior use only:

(1) Polyvinyl Chloride Glazing Gaskets: Extruded, flexible PVC gaskets of the profile and hardness shown, or as required for watertight construction; comply with ASTM D 2287.

(2) Cellular Neoprene Compression Seals: Extruded or molded, closed cell, integral-skinned neoprene of profile required to maintain watertight seal; comply with ASTM C 509, Type II, black.

C. Miscellaneous Glazing Materials:

1. Channel Cleaner: Use type compound recommended by sealant manufacturer for channel surfaces to be cleaned.

2. Channel Primer/Sealer: Provide type of primer or sealer recommended by sealant manufacturer for application of sealant to channel surfaces.

3. Setting Blocks: Neoprene, EPDM or silicone blocks as required for compatibility with glazing sealants, 80 to 90 Shore A durometer hardness.

4. Spacers: Neoprene, EPDM or silicone blocks, or continuous extrusions, as required for compatibility with glazing sealant, of size, shape and hardness recommended by glass and sealant manufacturers for application indicated.

5. Edge Blocks: Neoprene, EPDM or silicone blocks as required for compatibility with glazing sealant, of size and hardness required to limit lateral movement (side-walking) of glass.

6. Compressible Filler Rod: Closed-cell or waterproof-jacketed foam of polyethylene, butyl rubber, neoprene, polyurethane or vinyl, tested for compatibility with specified glazing sealants, of 5 to 10 psi compression strength (25% deflection), as recommended by sealant manufacturers for use in glazing channel to prevent sealant exudation from channel.

7. Mirror Supports: Provide stainless steel clips to support frameless mirrors. Provide four fixed clips at bottom of mirror and four adjustable clips at the top.

PART 3 - EXECUTION

3.01 PERFORMANCE REQUIREMENTS

A. Each installation must withstand normal temperature changes, wind loading, and impact loading (for operating sash and doors) without failure including loss of breakage of glass, failure of sealants or gaskets to remain watertight and airtight, deterioration of glazing materials and other defects in the work.

B. Protect glass from edge damage during handling, installation and operation of building systems and equipment.

C. Contractor is responsible for correct glass size for each opening, within tolerances and necessary dimensions established.

3.02 INSTALLATION

A. General and Standards:

1. Inspect each piece of glass immediately before installation, and eliminate pieces which have observable edge damage or face imperfections.

2. Do not attempt to cut, seam, nip or abrade glass which is tempered, heat strengthened, or coated.

B. Preparation of Substrate:

1. Clean the glazing channel, or other framing members to receive glass, immediately before glazing. Remove coatings which are not firmly bonded to the substrate. Remove lacquer from metal surfaces where elastomeric sealants are used. Do not clean with detergents.

2. Apply primer or sealer to joint surfaces where recommended by sealant manufacturer.

C. Sealant/Compound Glazing:

1. Install setting blocks of proper size in sill rabbet; locate at one-fourth of glass width, measured from each jamb. Set blocks in thin course of the heel-bead compound, if heel bead is to be installed.

2. Provide spacers inside and out, and of proper size and spacing, for glass sizes larger than 50 united inches, except where pre-shimmed tape or gaskets are used for glazing. Provide 1/8" minimum bite of spacers on glass, and use thickness equal to sealant width, except with butyl rubber sealant tape use thickness 1/32" less than final compressed thickness of tape.

3. Voids and Filler Rods: Prevent exudation of sealant or compound by forming voids or installing filler rods in channels at heel of jambs and heads (do not leave voids in sill channels), except as otherwise indicated. In general, voids or filler rods are required for glazing plastics, and for insulating glass more than 1/2" thick, and for laminated or colored glass (tinted, heat-absorbing and coated) larger than 75 united inches, and for other glass more than 9/32" thick or larger than 120 united inches.

4. Force sealants into channel to eliminate air pockets and voids and to ensure complete "wetting" and bond of sealant to glass and channel surfaces.

5. Tool exposed surfaces of glazing sealants and compounds to provide a substantial "wash" away from glass.

6. Clean and trim excess glazing materials from glass and stops or frames promptly after installation, and eliminate stains and discolorations.

D. Gaskets and Tapes:

1. Miter cut and bond ends together at corners where gaskets are used for channel glazing, so that gaskets will not pull away from corners and result in voids or leaks in glazing system.

2. Where wedge-shaped gaskets are driven into one side of channel to pressurize sealant or gasket on the opposite side, provide adequate anchorage to ensure that gasket will not "walk" out when subjected to dynamic movement. Anchor gasket to stop with matching ribs, or by proven adhesives, including embedment of gasket tail in cured heel bead.

E. Installation of Mirror Clips:

1. Secure clips with toggle bolts or expansion anchors of the type recommended for the substrate involved.

3.03 CURE AND PROTECTION

A. Cure glazing sealants and compounds in compliance with manufacturer's instructions and recommendations, to obtain high early bond strength, internal cohesive strength and surface durability.

B. Protect exterior glass from breakage immediately upon installation, by attachment of crossed streamers to framing held away from glass. Do not apply markers directly on surfaces of glass. Remove applied labels from glass surfaces immediately after glass installation.

C. Remove and replace glass which is broken, chipped, cracked, abraded or damaged in other ways during the construction period, including pieces damaged through natural causes, accidents and vandalism.

3.04 CLEANING GLASS

A. Protect glass from contact with contaminating substances resulting from construction operations. If, despite such protection, contaminating substances do come into contact with glass, remove immediately by method recommended by glass manufacturer.

B. Examine glass surfaces adjacent to or below exterior concrete and other masonry surfaces at frequent intervals during construction, but not less often than once a month, for build-up of dirt, scum, alkali deposits or staining. When examination reveals presence of these forms of residue, remove by method recommended by glass manufacturer.

C. Clean glass in accordance with manufacturer's recommendations.

D. Do not use abrasives.

E. Do not use broken razor blades on glass for cleaning.

F. Wash and polish glass on both faces not more than 4 days prior to Sandia's acceptance of the work in each area. Comply with glass manufacturer's recommendations.

END OF SECTION

SECTION 08811

PLATE AND FLOAT GLASS

PART 1 - GENERAL

1.01 RELATED DOCUMENTS

A. Drawings and general provisions of Contract, including General and Supplementary Conditions and Division-1 Specification sections, apply to work of this section.

1.02 DESCRIPTION

A. The types of plate and float glass required include the following:

1. Clear float glass.

2. Colored (tinted) float glass.

1.03 QUALITY ASSURANCE

A. Each required type shall be from a single manufacturer.

B. Comply with applicable provisions of FS DD-G-451D.

1.04 SUBMITTALS

A. Submit manufacturer's product specifications showing compliance with requirements and standards.

1.05 PRODUCT HANDLING

A. Comply with manufacturer's instructions for shipping, handling and storing. Provide care to avoid edge damage.

PART 2 - PRODUCTS

2.01 MATERIALS

A. Float Glass:

1. Clear, Type I, Class 1, quality q3.

    a. Thickness: 1/4"

2. Light reducing, tinted: Type I, Class 3, quality q3.

    a. Average daylight transmittance: 52% to 56%.

    b. Color: Bronze.

    c. Thickness: 1/4".

PART 3 - EXECUTION

3.01 INSTALLATION

A. Refer Section 08800, "Glazing."

END OF SECTION

SECTION 08813

TEMPERED GLASS

PART 1 - GENERAL

1.01 RELATED DOCUMENTS

A. Drawings and general provisions of Contract, including General and Supplementary Conditions and Division-1 Specification sections, apply to work of this section.

1.02 DESCRIPTION

A. The types of tempered and heat-strengthened glass required include the following:

1. Tempered float glass.

1.03 QUALITY ASSURANCE

A. Comply with applicable provisions of FS DD-G-1403.

1.04 SUBMITTALS

A. Submit manufacturer's product specifications showing compliance with requirements and standards.

1.05 PRODUCT HANDLING

A. Comply with manufacturer's instructions for shipping, handling and storing to avoid physical damage to tempered/heat-strengthened surfaces and edges.

PART 2 - PRODUCTS

2.01 MATERIALS

A. General:

1. Strength Requirements: Provide glass indicated as "tempered" to match manufacturer's production line samples which have been tested by standard

static methods to show bending strengths at least 4.5 times the strength of annealed glass of the same type and thickness before tempering.

2. Sizes: Cut glass to final size and shape, and with cutouts for hardware and similar features, prior to heat treatment; provide for proper edge clearances and bite on glass. Provide thicknesses indicated or, if not otherwise indicated, provide thicknesses recommended by manufacturer for the sizes and exposure conditions indicated.

3. Safety Glass: Where tempered glass is indicated or required by governing regulations to be "safety glass," provide glass complying with and permanently marked (labeled) to show compliance with the following:

   a. Consumer Product Safety Commission 16 CFR 1201.

   b. Industry Standard ANSI Z97.1.

B. Tempered Glass:

1. Clear, 1/4" thick, quality q3, Type I.

2. Light Reducing, Tinted:

   a. Average daylight transmission: 52% to 56%.

   b. Color: Bronze.

   c. Thickness: 1/4".

PART 3 - EXECUTION

3.01 INSTALLATION

A. Refer Section 08800, "Glazing."

END OF SECTION

SECTION 08822

LAMINATED GLASS

PART 1 - GENERAL

1.01 RELATED DOCUMENTS

A. Drawings and general provisions of Contract, including General and Supplementary Conditions and Division-1 Specification sections, apply to work of this section.

1.02 DESCRIPTION

A. The types of laminated glass required include the following:

1. Impact-resistant glass.

1.03 QUALITY ASSURANCE

A. Prime Glass Standards: Comply with applicable provisions of FS DD-G-451.

1.04 SUBMITTALS

A. Submit manufacturer's product specifications and instructions for handling, storing, cutting and installation, including specific limitations on exposure of laminated edges to sealants and other compounds.

1.05 PRODUCT HANDLING

A. Comply with manufacturer's instructions for shipping, handling and storing laminated glass, including protection of edges.

1.06 SPECIAL PROJECT WARRANTY

A. Provide written warranty, signed by laminator (manufacturer) and countersigned by Contractor; agreeing to, within warranty period, replace glass units with defective lamination; defined to include evidence of delamination, changes in required strengths, transmittances, color, transparency, acoustic ratings, and other

required performances, and deterioration of coatings (if any) concealed in the lamination; provided the manufacturer's printed and submitted instructions for handling and protection of glass and use of glazing compounds have been adhered to through the period.

B. Warranty period is 10 years after date of building acceptance.

PART 2 - PRODUCTS

2.01 MATERIALS

A. General:

1. Prime Glass: Provide clear float glass of Quality q3, in thicknesses indicated and as required for performances indicated, as sheets of glass in laminations.

   a. Color: Bronze tinted, transmittance of 52% to 56%.

2. Glass Cutting: Where possible, cut glass sheets to final glazing sizes prior to laminating, so that no cutting, seaming or nipping of laminated glass will be required.

3. Laminating Film: Provide clear, transparent, permanent film of polyvinyl butyral as adhesive plastic interlayer for laminating sheets of glass; of a composition which has successfully withstood a minimum of 20 year's exposure to sunlight and severe weather/temperature changes.

4. Laminating Process: Laminator's standard heat-plus-pressure glass laminating process, free of foreign substances and air/gas pockets.

5. Thickness Control: Comply with indicated thicknesses where possible. Where thicknesses must, of necessity, be changed, coordinate with corresponding changes in glazing system for proper installation of laminated glass.

B. Laminated Impact-Resistant Glass:

1. Fabricate and label each special impact-resistant glass unit to show that its design has been tested and listed by UL as "Burglary-Resisting Glass," complying with UL 972 criteria; with the following components:

   a. Exterior Sheet: 1/8" glass.

   b. Laminating Film: 60 mils thick.

   c. Interior Sheet: 1/8" glass.

PART 3 - EXECUTION

3.01 INSTALLATION

A. Refer to Section 08800, "Glazing,"

END OF SECTION"

SECTION 08823

INSULATING GLASS

PART 1 - GENERAL

1.01 RELATED DOCUMENTS

A. Drawings and general provisions of Contract, including General and Supplementary Conditions and Division-1 Specification sections, apply to work of this section.

1.02 DESCRIPTION

A. The types of insulating glass units required include the following:

1. Sealant-edged double-seal units

1.03 QUALITY ASSURANCE

A. Comply with applicable provisions of FS DD-G-451D

B. Where tempered glass is required, comply with applicable provisions of FS DD-G-1403B.

C. Manufacturer: Provide units carrying the IGCC label of certification.

1.04 SUBMITTALS

A. Submit manufacturer's product specifications and instructions for handling, storing and installation, including specific limitations on exposure of sealed edges to sealants and compounds in the glazing system.

1.05 PRODUCT HANDLING

A. Comply with manufacturer's instructions for shipping, storing and handling insulating glass units, including protection of edges.

1.06 SPECIAL PROJECT WARRANTY

A. Warranty on Insulating Glass Units: Provide written warranty signed by fabricator (manufacturer) and countersigned by Contractor, agreeing, within warranty period, to replace glass units with defective hermetic seal of air spaces (but not including that due to glass breakage), defined to include intrusion of dirt or moisture, internal condensation or fogging at temperatures above -20 degrees F, deterioration of protected internal glass coatings resulting from seal failure, and other visual evidence of seal failure or performance; provided the manufacturer's printed and submitted instructions for handling, protecting and maintaining units have been adhered to during the warranty period.

1. Warranty period is 10 years after seal date is permanently imprinted on unit, but not less than 9 years after date of building acceptance.

PART 2 - PRODUCTS

2.01 MATERIALS

A. Float Glass: 1/4" thick, Type I, Class 1, Quality q3

1. Color:

a. Clear

b. Tinted Bronze: Transmittance 52% to 56%.

B. Safety Glass: Where insulating glass units are required to have safety glass, either from one direction or both, provide exposed sheet of tempered or laminated glass that complies with and is labeled to show compliance with the following:

1. Consumer Products Safety Commission 16 CFR 1201

2. ANSI Z97.1

2.02 SEALANT-EDGED INSULATING GLASS

A. Standards: Fabricate and label units to match units that have been tested and certified by the Insulating Glass Certification Council in accordance with proposed standard ASTM E6-P3, Test Methods, P1 and P2 (as sponsored by the Sealed Insulating Glass Manufacturers Association), and that have passed tests for the following classification:

1. Insulating glass seal classification "A"

B. Sealed Edge Construction: Fabricate units with a permanent, hermetically sealed, dry air or glass filled space of the width indicated, between sheets of glass as indicated. Provide an edge seal consisting of twin primary sealant beads of

polyisobutylene, positioned and retained by a tubular aluminum spacer-bar frame with soldered/welded sealed corners, and filled with desiccant with breather ports into sealed space, with secondary edge sealant completely encapsulating outer face of spacer bar and sealed to the opposing sheets of glass. Provide silicone or elastomeric sealant as secondary edge seal.

C. Air Space:

1. 1/2" wide

2. Fill air spaces by fabricator's standard process, using either gas or dry air with a maximum dew point of -20 degrees F. Exercise extreme care to exclude dirt and other foreign substances.

D. Label each unit to show compliances with required standards and regulations and to list generically each component including elements of edge seal. Indicate which face of unit is for exposure to exterior of weather. Provide removable label except where regulations require a permanent label.

2.03 FABRICATION

A. General: Fabricate special environmental glass units of the required sizes, with specified sealed edge construction, and with the following glass components:

1. Exterior Pane:

a. Color: Bronze tinted, transmittance 52% to 56%.

2. Interior Pane:

a. Color: Clear.

PART 3 - EXECUTION

3.01 INSTALLATION

A. Refer to Section 08800, "Glazing."

END OF SECTION

SECTION 08824

LAMINATED LIQUID-CRYSTAL GLASS

PART 1 - GENERAL

1.01 RELATED DOCUMENTS

A. Drawings and general provisions of Contract, including General and Supplementary Conditions and Division-1 Specification sections, apply to work of this section.

1.02 DESCRIPTION

A. Translucent/clear vision panels which are electrically operated.

1.03 QUALITY ASSURANCE

A. Prime Glass Standards: Comply with applicable provisions of FS DD-G-451.

B. Heat-Treated Glass: Comply with applicable provisions of FS DD-G-1403.

1.04 SUBMITTALS

A. Submit manufacturer's product specifications and instructions for handling, storing, and installation, including specific limitations on exposure of laminated edges to sealants and other compounds.

1.05 PRODUCT HANDLING

A. Comply with manufacturer's instructions for shipping, handling and storing glass, including protection of edges.

1.06 SPECIAL PROJECT WARRANTY

A. Provide written warranty, signed by laminator (manufacturer) and countersigned by Contractor; agreeing to, within warranty period, replace glass units with defective lamination; defined to include evidence of delamination, changes in required strengths, transmittances, color, transparency, and other required performances, and deterioration of electro-optical film concealed in the lamination; provided the manufacturer's printed and submitted instructions for

handling and protection of glass and use of glazing compounds have been adhered to through the period.

B. Warranty period is 10 years after date of substantial completion.

PART 2 - PRODUCTS

2.01 MATERIALS

A. General: Provide vision panels which are made by laminating an electro-optical film between two layers of glass using architectural grade polyvinyl butyral (PVB) interlayers.

B. Vision panels thickness: 5/16".

C. Glass Type: Heat-strengthened float glass.

D. Color: Clear glass.

E. Manufacturer: Varilite by Taliq Corp or approved equal.

F. Electrical Connections: Two 18 AWG type TEW wires extending 6 feet from the corners of one edge of the glass.

G. Power Consumption: Nominally/watt per square foot.

H. Power Required: 115 VAC.

I. Remote Switching: 24 VAC.

J. Provide manufacturer's power module to provide conditioned power to panels.

PART 3 - EXECUTION

3.01 INSTALLATION

A. Orientation: Position vision panels so that connecting wires are located vertically along the right or left side or along top of panel.

B. Frame Bite: Minimum of 5/8" to conceal busbars.

C. Edge Clearance: 1/4" minimum.

D. Electrical installation and sealing shall be in accordance with manufacturer's published instructions.

3.02 PROTECTION AND CLEANING

A. Refer Section 08800, "Glazing".

END OF SECTION

SECTION 08920

TRANSLUCENT WALL AND SKYLIGHT SYSTEMS

PART 1 - GENERAL

1.01 RELATED DOCUMENTS

A. Drawings and general provisions of Contract, including General and Supplementary Conditions and Division-1 Specification sections, apply to work of this section.

1.02 DESCRIPTION

A. Types of panels include:

1. Translucent, 180° vault, single panel-self supporting.

B. Extent of panels is shown on the drawings.

1.03 QUALITY ASSURANCE

A. Panels shall be as manufactured by Kalwall Corporation, 1111 Candia Road, Manchester, NH, or approved equal.

B. Panels shall pass a class "A" Burning Brand Test per ASTM E-108.

C. Flammability - The interior face sheet shall have a flamespread rating no greater than 25 and smoke development no greater than 300 when tested in accordance with ASTM E-84). Burn extent by ASTM D-735 shall be no greater than 1".

D. Weatherability:

1. The exterior faces shall not change color more than 3.0 Units (DELTA E by ASTM D-2244) after five (5) years outdoor weathering South Florida at 70° facing South determined by the average of at least three (3) white samples. (7.0 Units for Class A Built Up Roof System)

2. An exterior white face sheet shall not darken more than .2 Units (DELTA L by ASTM D-2244) when exposed to 150°F for two (2) weeks.

3. The exterior faces shall have a high performance thermoset acrylic protective surface -- minimum thickness 1.2 mils -- for maximum resistance to erosion

and weather, applied in the factory under controlled temperature conditions. This coating must be fully field refinishable if damaged.

1.04 SUBMITTALS

A. Submit copies of manufacturer's specifications, standard detail drawings, and installation instructions for panels. Include manufacturer's certification or other data substantiating that the materials and finishes comply with the requirements.

B. Submit structural calculations and shop drawings sealed by a California Registered Professional Structural Engineer.

C. Shop Drawings: Submit shop drawings showing the details of jointing, internal supports, anchorages, trim, flashing, corners and accessories. Show details of weatherproofing at edges, terminations and penetrations of the work. Show small-scale layout and elevations of entire work.

1.05 PRODUCT HANDLING

A. Protect sandwich panels from damage during transportation and at jobsite. Store at site under cover and not in contact with ground. Damaged or stained panels will be rejected and replaced with new work at no additional cost to Sandia.

PART 2 - PRODUCTS

2.01 MATERIALS

A. Vault Panels:

1. Panels shall consist of glass fiber reinforced polymer faces permanently bonded under a controlled heat and pressure process to a mechanically interlocked extruded aluminum grid core.

   a. Grid core: 6063-T6 aluminum I-beam, 7/16" flange width

2. Translucent Panel Face Sheet Combinations:

   a. Exterior:

      (1) White

   b. Interior:

      (1) Crystal

3. Panel Thickness:

   a. 2-3/4"

4. U-Value: 0.19

B. Aluminum Frames:

1. 6063-T5 aluminum

2. Miter and heli-arc weld at corners.

3. Provide stainless steel clamp fasteners.

4. Provide stainless steel screws.

5. Aluminum Finish: Standard CRF.

C. Sealant and Sealant Tapes:

1. Provide sealant recommended by manufacturer of translucent panels.

D. Flashing: Provide aluminum flashing finished to match aluminum frames.

PART 3 - EXECUTION

3.01 INSTALLATION

A. Translucent vault panels shall be installed by a contractor approved by panel manufacturer and in strict accordance with manufacturer's written instructions.

B. Anchor component parts securely in place, providing for necessary thermal and structural movement.

C. Erection of the panels must be started correctly and the panels held true to line.

3.02 CLEANING

A. Clean exposed surfaces of work promptly after completion of installation. Comply with recommendations of panel manufacturer.

3.03 DAMAGED PANELS

A. Replace damaged panels at no additional cost to Sandia.

END OF SECTION

SECTION 09260

GYPSUM WALLBOARD SYSTEMS

PART 1 - GENERAL

1.01 RELATED DOCUMENTS

A. Drawings and general provisions of Contract, including General and Supplementary Conditions and Division-1 Specification sections, apply to work of this section.

1.02 DESCRIPTION

A. The types of work include, but are not limited to, the following:

1. Gypsum drywall including screw-type metal support system.

2. Gypsum drywall applied to metal framing and furring.

3. Drywall finishing (joint tape-and-compound treatment).

4. Sound attenuation blankets.

5. Vapor retarders.

1.03 QUALITY ASSURANCE

A. Requirements of Regulatory Agencies:

1. Underwriters Laboratories Inc.:

a. Fire Hazard Classification (40 U8.22)

b. Fire Resistance Classification (40 U18)

B. Comply with GA-216 "Application and Finishing of Gypsum Board" by Gypsum Association.

C. Install steel framing in accordance with ASTM C754 except where more stringent methods are required by specifications or drawings.

D. Allowable Tolerances: 1/8" offsets between planes of board faces, and 1/4" in 8'-0" for plumb, level, warp and bow.

E. References to ASTM and Federal standards shall mean the latest edition of that standard.

1.04 SUBMITTALS

A. Furnish manufacturer's certification that materials meet or exceed specification requirements.

B. Furnish manufacturer's printed instructions for installation of the assemblies.

1.05 PRODUCT DELIVERY, STORAGE, AND HANDLING

A. Delivery and Handling:

1. Deliver materials to the project site with manufacturer's labels intact and legible.

2. Deliver fire-rated materials bearing testing agency label and required fire classification numbers.

B. Storage:

1. Store materials inside under cover; stack flat off floor.

2. Do not overload floor system.

3. Store adhesives in dry area and do not allow to freeze.

1.06 JOB CONDITIONS

A. Maintain ambient temperature at not less than 55 degrees F for 24 hours before, during and after gypsum wallboard and joint treatment application.

B. Ventilation:

1. Provide ventilation during and following adhesives and joint treatment applications.

2. Protect installed materials from drafts during hot, dry weather.

PART 2 - PRODUCTS

2.01 MATERIALS

A. Gypsum Wallboard:

1. Fire-rated board:

a. FS SS-L-30D, Type III, Grade X, Class 1

b. Thickness: 5/8"

c. Edges: Tapered

2. Sound Deadening Board: 1/4" gypsum board.

B. Fasteners:

1. Screws for sheet metal application:

a. Self-drilling, self-tapping, bugle head, for use with power driven tool.

b. Single layer and base layer application:

(1) Type S, 1" long.

C. Joint Treatment Materials:

1. Joint tape:

a. FS SS-J-570a, Type II

b. Perforated tape

2. Joint compound: Ready-mixed vinyl-type for interior use.

a. Grade: 2 separate grades; one specifically for bedding tapes and filling depressions, and one for topping and sanding.

D. Sound Attenuation Blankets:

1. FS HH-I-521E, Type I

2. Thickness: 2"

3. 3-1/2" batt insulation may be used at Contractor's option.

E. Accessories:

1. Corner beads: U.S.G. Perf-A-Bead or equal.

2. Edge trim: U.S.G. No. 200 series or equal.

3. Tie wire: 18 ga. galvanized, annealed.

4. Hanger wire: 8 ga., galvanized, annealed.

5. Control joints: U.S.G. 093 or equal.

6. Acoustical sealant: Refer Section 07900.

F. Vapor Retarder: Lamination of 1-mil thickness of aluminum foil between two 1/2-mil thicknesses of mylar polyester film.

1. Permeability: 0.0000 perms.

2. Flame spread: 15

3. Fuel Contribution: 0

4. Smoke Development: 5

5. Provide joint tape and adhesive specifically recommended for vapor retarder installation. Penetrations through vapor retarder shall be sealed.

G. Metal Studs and Furring:

1. Studs and runners for interior walls: channel type, roll formed steel, except where indicated otherwise. Stud size is indicated on the drawings. Studs in office areas shall be 20 gauge unless otherwise noted on the drawings. Studs in Laboratory areas shall be 16 gauge unless noted otherwise on the drawings. Provide painted studs.

2. Furring channels: Hat-shaped channels roll formed galvanized steel, sizes as indicated on drawings.

3. Cold-rolled channels: 16 gauge, 3/4" and 1-1/2" depth.

4. Fasteners: Provide screws, powder driven fasteners and mastic as recommended by manufacturer.

H. Large Radius Corners: Softforms, Model SI-LRT by Pittcon Industries or approved equal.

PART 3 - EXECUTION

3.01 INSTALLATION

A. General:

1. Use wallboard of maximum lengths to minimize end joints.

2. Stagger end joints when they occur.

3. Locate end joints as far as possible from center of wall or ceiling.

4. Abut walls without forcing.

B. Framing:

1. Suspended ceilings and soffits:

a. Space 8-gauge hanger wire 48" o.c. along carrying channels and within 6" of ends. Hanger wire shall receive three full turns around itself in making loop attachment to structure, inserts, pins or embedded loops. Each hanger wire shall support 300 lbs. without failure.

b. Install 1-1/2" carrying channels 48" o.c. and within 6" of parallel walls and cut short of abutting walls 1/2 inch, plus or minus 1/4 inch. Saddle-tie hanger wire to carrying channels with three full turns around itself. At splices interlock flanges, overlap ends 12" and secure each end with double strand 18 ga. tie wire. Stagger splices. Level main runners to a tolerance of 1/4" in 12'-0", measured both lengthwise on each runner and transversely between parallel runners.

c. Erect furring channels at right angles to carrying channels and spaced at 16" o.c. Secure at crossings with double strand 18-gauge tie wire saddle-tied. Wire ties shall receive three full twists. Furring channels shall be located within 2 inches of walls. At splices, nest furring channels with at least 8" overlap and wire tie each end with double strand 18 gauge tie wire.

2. Wall systems:

a. Erect non-load-bearing partitions with steel studs and runners. Space studs at 16" o.c. and interconnect end studs in adjoining partitions with screws at 24" o.c.

b. Secure floor and ceiling runners to structure at 24" o.c. maximum. Secure to furred ceilings at each furring channel.

c. Fasten studs to ceiling and floor runners by installing a screw into both flanges at each end. Studs shall be installed in continuous lengths with no splicing in lengths up to 16' for 3-5/8" studs and 16' for 6" studs.

d. Wall furring: Secure hat-shaped furring channels to substrate at 16" o.c. with hardened nails, expansion shields or other approved fasteners. Locate fasteners at 24" o.c., staggered in the channel flanges. Set furring plumb and level using galvanized steel shims.

3. Framed openings:

a. Ceiling openings: Install auxiliary framing at termination of drywall work, and at openings for light fixtures, air supply exhaust, access panels and similar work, as required for support of both the drywall construction and other work indicated for support thereon. Intermediate structural members, although not a part of the building structural system, shall be provided for attachment and suspension of support members.

b. Wall openings: Provide frames for openings required for doors, pass-throughs, access panels, ducts, cable trays and similar work. Install runner channel section cut 24" longer than rough-opening above and below framed opening. Bend, nest and secure runner ends to studs. Prepared openings above ceilings in fire-rated work shall conform to SMACNA and UL requirements.

(1) Space jack studs same as partition studs and screw to runner tracks above and below.

(2) Install two (2) studs at each jamb of each opening over 2'-0" wide.

C. Wallboard:

1. Do not install imperfect, damaged or damp boards. Butt boards together for a light contact at edges and end with not more than 1/16" open space between boards.

2. Ceilings - single ply: Apply wallboard with long dimension at right angles to framing.

3. Walls - single ply: Apply wallboard with long dimension at right angles to furring or framing, unless ceiling height is greater than 8'-2".

a. When installing wallboard horizontally attach upper wallboard first.

b. Stagger end joints to occur on different framing members on opposite sides of partition.

D. Attachment:

1. Fastening shall conform to ANSI A97.1.

2. Use only screw fasteners.

3. Space screws 12" o.c. along ends and edges and field of wallboard at walls and ceilings.

4. Drive screws with positive clutch electric screwdriver.

E. Taping and Finishing Joints:

1. All joints in exposed and unexposed areas shall be taped and bedded.

2. Taping and embedding joints:

a. Apply compound in thin uniform layer to joints and angles to be reinforced.

b. Apply reinforcing tape immediately.

c. Center tape over joint, and seat tape into compound.

d. Leave approximately 1/64 in. to 1/32 in. compound under tape to provide bond.

e. Apply skim coat immediately following tape embedment but not to function as fill or second coat.

f. Fold tape and embed in angles to provide true angle.

g. Dry embedding coat prior to application of fill coat.

3. Filling:

a. Apply joint compound over embedding coat.

b. Fill taper flush with surface.

c. Apply fill coat to cover tape.

d. Feather out fill coat 2 inches beyond tape and previous joint compound line.

e. Joints with no taper: Feather out at least 4 in. on either side of tape.

f. Do not apply fill coat on interior angles.

g. Allow fill coat to dry prior to application of finish coat.

4. Finishing:

a. Spread joint compound evenly over and 2 inches beyond fill coat on all joints.

b. Feather to smooth, uniform finish.

c. Apply finish coat to taped angles to cover tape and taping compound.

d. Sand final application of compound to provide surface ready for decoration.

F. Filling and finishing depressions:

1. Apply joint compound as first coat to fastener depressions.

2. Apply at least two additional coats of compound after first coat is dry.

3. Leave filled and finished depressions level with plane of surface.

G. Finishing Beads and Trim:

1. First fill coat:

a. Apply joint compound to bead and trim.

b. Feather out from ground to plane of the surface.

c. Dry compound prior to application of second fill coat.

2. Second fill coat:

a. Apply joint compound in same manner as first fill coat.

b. Extend beyond first coat onto face of wallboard.

c. Dry compound prior to application of finish coat.

3. Finish coat:

a. Apply joint compound to bead and trim.

b. Extend beyond second fill coat.

c. Feather finish coat from ground to plane of surface.

d. Sand finish coat to provide flat surface ready for decoration.

H. Control Joints:

1. Locate wall control joints at approximately 20' on centers. Do not locate wall control joints within 8" of a corner or opening.

2. Locate control joints at each jamb of every door on both sides of the partition. Extend joint from door head to top of the partition.

3. Door jamb control joints may serve as the required wall control joints if it lies within the approximately 20' spacing as described above.

3.02 SPECIAL CONSTRUCTION

A. Gypsum board crossbracing for chase wall construction:

1. Minimum size: 12" by chase width.

2. Fastening: Type "S" screws spaced 8" o.c., with minimum three screws per stud web.

3. Space braces maximum 36" vertically on every pair of studs.

B. Sound-Rated Work:

1. Prior to installing gypsum board provide continuous beads of acoustical sealant at juncture of both faces of runners and plates with floor and ceiling construction and whenever work abuts dissimilar materials.

2. At control joints provide continuous bead of acoustical sealant between edges of gypsum boards.

3. At openings and cutouts, fill open spaces between edges of gypsum boards and fixtures, cabinets, ducts and other flush and penetrating items with continuous bead of acoustical sealant.

4. Seal sides and backs of electrical boxes to completely close openings and joints with acoustical sealant. Do not place electrical boxes back-to-back in sound rated partitions.

5. Where sound-rated partitions intersect nonrated partitions extend rated construction through nonrated work to completely close sound flanking paths.

C. Vapor Retarder: Apply vapor retarder to gypsum board substrate with recommended adhesive. Fold and seal vapor retarder tightly around corners. Seal lap joints with adhesive. Seal butt joints with pressure sensitive tape recommended by vapor retarder manufacturer. Seal penetrations with bead of sealant or by application of joint tape.

3.03 ADJUST AND CLEAN

A. Screw Pop:

1. Repair screw pop by driving new screw approximately 1-1/2" from screw pop and reseat screw.

2. When face paper is punctured drive new screw approximately 1-1/2" from defective fastening and remove defective fastening.

3. Fill damaged surface with compound.

B. Ridging:

1. Do not repair ridging until condition has fully developed: approximately six months after installation but prior to building acceptance.

2. Sand ridges to reinforcing tape without cutting through tape.

3. Fill concave areas on both sides of ridge with topping compound.

4. After fill is dry, blend in topping compound over repaired area.

C. Fill cracks with compound and finish smooth and flush.

"END OF SECTION"

SECTION 09310

CERAMIC TILE

PART 1 - GENERAL

1.01 RELATED DOCUMENTS

A. Drawings and general provisions of Contract, including General and Supplementary Conditions and Division-1 Specification sections, apply to work of this section.

1.02 DESCRIPTION

A. Ceramic mosaic tile work.

B. Ceramic tile pavers.

1.03 QUALITY ASSURANCE

A. Furnish tile conforming with the Standard Grade Requirements of TCA 137.1.

B. When using setting and grouting materials manufactured under TCA license, include identification and formula number on each container.

C. Provide materials obtained from only one source for each type of tile and color.

D. Handle, store, mix and apply proprietary setting and grouting materials in compliance with manufacturer's instructions.

1.04 SUBMITTALS

A. Submit manufacturer's technical information and installation instructions for all materials.

B. Submit samples of each type and color of tile required, not less than 12" square on plywood or hardboard backing, and grouted as required.

C. Master Grade Certificate: Furnish Master Grade Certificate for each type of tile, signed by manufacturer and installer.

1.05 PRODUCT DELIVERY, STORAGE AND HANDLING

A. Deliver packaged materials and store in original containers with seals unbroken and labels intact until time of use, in accordance with manufacturer's directions.

1.06 JOB CONDITIONS

A. Maintain a temperature of not less than 50 degrees F during tile installation and for 7 days after completion.

PART 2 - PRODUCTS

2.01 TILE

A. Unglazed Ceramic Mosaic Tile: Provide factory-mounted flat tile complying with the following requirements:

1. Type:

a. Porcelain

2. Wearing Surface:

a. Without abrasive content.

3. Nominal Facial Dimensions:

a. 2" x 2".

4. Nominal Thickness:

a. 1/4".

5. Face:

a. Plain with cushion edges.

B. Unglazed Paver Tile: Provide flat tile complying with the following requirements:

1. Type:

a. Porcelain.

2. Nominal Facial Dimensions:

a. 12" x 12".

3. Nominal Thickness: 5/16".

4. Face:

a. Slip resistant with cushioned edges.

C. Trim and Special Shapes

1. Rounded external corners, and trim shapes at head, jamb, and sills of opening, of same material and finish as field tile, and as follows:

a. Base: Sanitary cove units

b. External Corners: Bullnose shapes, with a radius of not less than 3/4", unless otherwise shown

c. Internal Corners: Field-butted square, except use square corner, combination angle, and stretcher-type cap.

D. Marble Thresholds: Provide sound Group "A" marble of size and shape indicated with an abrasive hardness of not less than 10.0, when tested in accordance with ASTM C 241.

1. Provide white, bonded marble complying with MIA Group "A" requirements for soundness.

2.02 SETTING MATERIALS

A. Portland Cement Mortar Installation Materials: Comply with ANSI A108.1 as required for installation method designated.

B. Thin-Set Portland Cement Mortar:

1. Latex-portland cement mortar, ANSI A118.4.

2.03 GROUT

A. Latex-Portland Cement Grout: Proprietary compound composed of portland cement with latex additive for a more flexible and less permeable grout. Color as selected by Sandia Delegated Representative from manufacturer's standard.

1. Provide product with latex additive which is compatible with latex additive in latex-portland cement mortar.

2.04 ACCESSORY MATERIALS

A. Waterproof membrane: Two-component liquid rubber latex with continuous fiberglass reinforcement. Laticrete 301/335 or approved equal.

B. Reinforcing: 2" x 2" x 16/16 gauge welded wire fabric.

C. Sealants: Refer Section 07900.

D. For concrete backer board refer Section 06100.

PART 3 - EXECUTION

3.01 TILE INSTALLATION STANDARDS

A. Comply with applicable requirements of the following except as otherwise specified or detailed:

1. ANSI A108.5: Tile installed with latex-portland cement mortar

B. Comply with manufacturer's instructions for mixing and installation of proprietary materials.

3.02 INSTALLATION

A. Extend tile work into recesses and under equipment and fixtures to form a complete covering without interruptions, except as otherwise shown. Terminate work neatly at obstructions, edges, and corners without disruption of pattern or joint alignment.

B. Accurately form intersections and returns. Perform cutting and drilling of tile without marring visible surfaces. Grind cut edges of tile abutting trim, finish, or built-in items for straight, aligned joints. Fit tile to electrical outlets, piping, and fixtures so that plates, collars, or covers overlap tile.

C. Jointing Pattern:

1. Lay tile in grid pattern. Align joints when adjoining tiles on floor, base, walls, and trim are the same size. Lay out tile work and center tile fields both directions in each space or on each wall area. Adjust to minimize tile cutting. Provide uniform joint widths.

D. Expansion and Control Joints:

1. Provide openings for joints where shown and to comply with details, or, if not shown and detailed, to comply with recommendations in TCA "Handbook for Ceramic Tile Installation."

E. Placement Methods: Install tile using the following setting beds as shown or scheduled:

1. Thickset Installations: (Floors)

a. Plastic mortar bed; ANSI A108.1, TCA F101-88.

b. Dry-set mortar over cured mortar bed; ANSI A108.5, TCA F102-88.

c. Method a or b may be at the Contractor's option.

2. Thin-Set Installations: (Walls)

a. Latex-portland cement mortar; ANSI A108.5, TCA W244-88.

F. Set marble thresholds in the same type setting bed as field tile.

G. Grout:

1. Use latex-portland cement grout.

3.03 ADJUST AND CLEAN

A. Cleaning:

1. Clean grout and setting materials from face of tile while materials are workable. Leave tile face clean and free of foreign matter.

2. Unglazed tile may be cleaned with diluted acid solutions only when permitted by the tile and grout manufacturer's printed instructions, but not sooner than 14 days after installation. Protect metal surfaces, cast iron, and vitreous plumbing fixtures from effects of acid cleaning. Flush the surface with clean water before and after cleaning.

B. Finished Tile Work:

1. Leave finished installation clean and free of cracked, chipped, broken, unbonded, or otherwise defective tile work.

C. Protection:

1. When recommended by tile manufacturer, apply a protective coat of neutral protective cleaner to completed tile walls and floors.

2. Protect installed tile floors with Kraft paper or other heavy covering during the construction period to prevent damage and wear.

3. Prohibit foot and wheel traffic from using tiled floors for at least 3 days after grouting is completed.

4. Before final inspection, remove protective coverings and rinse neutral cleaner from tile surfaces.

"END OF SECTION"

SECTION 09510

ACOUSTICAL CEILINGS

PART 1 - GENERAL

1.01 RELATED DOCUMENTS

A. Drawings and general provisions of Contract, including General and Supplementary Conditions and Division-1 Specification Sections, apply to work of this section as if repeated herein.

1.02 DESCRIPTION

A. The types of acoustical panel ceilings specified in this section include the following:

1. Acoustical panel ceilings, exposed suspension grid.

1.03 QUALITY ASSURANCE

A. Installer Qualifications: Firm with not less than 3 years of successful experience in installation of acoustical ceilings similar to requirements for this project and which is acceptable to manufacturer of acoustical units, as shown by current written statement from manufacturer.

B. Coordination of work: Coordinate layout and installation of acoustical ceiling units and suspension system components with other work supported by or penetrating through, ceilings, including light fixtures, HVAC equipment, fire-suppression system components, and partition system.

C. Surface Burning Characteristics: As follows, tested per ASTM E84.

1. Flame Spread: 25 or less.

2. Smoke Developed: 50 or less.

1.04 SUBMITTALS

A. Submit manufacturer's product specifications and installation instructions for each acoustical tile and suspension system required, including certified laboratory test reports and other data necessary to show compliance with these specifications.

B. Submit shop drawing details and reflected ceiling plans of suspension systems specified in this section. Show location of ceiling units and other items of work which are to be coordinated with ceiling, and show framing and support details for work supported by suspension system. Certify compliance with ASTM C 635 and other specified requirements, and indicate structural classification of each type of suspension system.

C. Submit sets of 12" square samples for each acoustical tile required, showing full range of color and texture variation.

1.05 JOB CONDITIONS

A. Interior finish work such as concrete and drywall work shall be complete and dry before installation. Mechanical, electrical, and other work above the ceiling line shall be completed and approved prior to the start of acoustical ceiling installation.

B Environmental Conditions: A uniform temperature of not less than 60 degrees F. nor more than 80 degrees F. and a relative humidity of not more than 75 percent shall be maintained continuously before, during, and after installation of acoustical units.

C. Acoustical units shall be delivered to the site in the manufacturer's original unopened containers with brand name and type clearly marked.

1.06 PRODUCT HANDLING

A. Store under cover in dry watertight enclosures

B. Immediately before installation, acoustical units shall be stored for not less than 24 hours at the same temperature and relative humidity as the space where they will be installed.

1.07 ATTIC STOCK

Furnish 20 cartons of clean room tiles and 8 cartons of 2'x2' tiles as spares. Furnish spares in original cartons and place in location as directed by Sandia.

PART 2 - PRODUCTS

2.01 MATERIALS

A. Standard for Acoustical Ceiling Units: Provide manufacturer's units of configuration indicated which are prepared for mounting method designated and which comply with FS SS-S-118B and scheduled requirements.

B. Acoustical Ceiling Unit Schedule: Products listed by name are intended to set a standard of quality, appearance, and character of units required and are not intended to exclude the products of other manufacturers which may be approved equal.

1. Panels scheduled in Laboratories:

a. Type: Auratone, Clean Room Class 10M-100M by USG or approved equal, complying with Federal Standard 209B.

(1) Type: Panels sealed on all sides and edges.
(2) NRC Range: .55-.65
(3) Pattern: Perforated
(4) Size: 24" x 48" x 5/8"
(5) Edge Detail: Square
(6) Finish: Washable white vinyl-coated aluminum surface.
(7) LR Grade: 1 (over 75%)

2. Panels scheduled in Office Areas:

a. Type: Minatex by Armstrong or approved equal.

(1) NRC Range: .50 - .60
(2) Pattern: Rough texture.
(3) Size: 24" x 24" x 5/8"
(4) Edge Detail: Lay-in
(5) Finish: Vinyl latex paint
(6) LR Grade: 2 (70-74%)
(7) STC Range: 30-34

2.02 SUSPENSION SYSTEM

A. General:

1. Comply with the requirements of ASTM C635.

2. Structural Classification: Medium-duty system in Office areas and heavy duty in Laboratories.

3. Coordination of Components: Provide suspension system which is coordinated with partitions, and which is coordinated with the limitations and requirements for hanging from structure and supporting light fixtures, HVAC

components and similar work indicated to be supported by or located on suspended acoustical panel ceilings. Include the necessary components for a complete suspension system including (as applicable) inserts, anchors, hangers, carrying channels, main runners, cross runs, splines, edge moldings, splices, clips, fasteners, springs, tie wires, hold-down devices, and similar members, devices and accessories.

B. Exposed Suspension System: (Steel):

1. 540 system by Chicago Metallic Corp., or approved equal.

2. Main runners and cross tees shall be of cold rolled steel with a factory applied paint finish on a 15/16" flange face.

a. Color: Lo-gloss white.

3. System shall be designed to meet building code requirements for seismic loadings. See drawings for compression member details.

C. Attachment Devices: Size for 5 times design load indicated in ASTM C635, Table 1, Direct Hung.

D. Hanger Wires:

1. 12 gauge galvanized steel.

E. Where recessed fixtures or ceiling diffusers or openings of any description occur, additional cross tees, hung with No. 12 galvanized wire, shall be installed to support these fixtures. Tees surrounding a recessed fixture or ceiling diffuser shall be hung at the four corners with No. 12 wire suspended from the structure.

F. Edge Moldings and Trim: Provide manufacturer's metal moldings for edges and penetrations of ceiling which fits with type of edge detail and suspension system indicated.

PART 3 - EXECUTION

3.01 INSTALLATION

A. Suspension System:

1. Suspension system shall be installed in a true and level plane in straight line courses. Border tiles shall be no less than one-half the width of a tile, and 6" or more in width and equal in size. Wall mouldings shall be secured to perimeter walls in accordance with manufacturer's recommendations. Additional wire hangers shall be installed at the corners of light fixtures.

2. Wall mouldings shall not be secured to walls scheduled to receive vinyl fabric until after vinyl fabric is installed. Vinyl fabric shall extend a minimum of 1" above the bottom of wall moulding.

B Install suspension systems to comply with ASTM C 636, with hangers supported only from building structural members. Locate hangers not more than 6" from each end and spaced 4'-0" along each carrying channel or direct-hung runner, unless otherwise indicated, leveling to tolerance of 1/8" in 12'-0".

C Secure wire hangers by looping and wire-tying, either directly to structures or to inserts, eye-screws, or other devices which are secure and appropriate for substrate, and which will not deteriorate or fail with age or elevated temperatures.

D. Install hangers plumb and free from contact with insulation or other objects within ceiling plenum which are not part of supporting structural or ceiling suspension systems. Splay hangers only where required to miss obstructions and offset resulting horizontal force by bracing, countersplaying or other equally effective means.

E. Install edge moldings of type indicated at perimeter of acoustical ceiling area and at locations where necessary to conceal edges of acoustical units.

1. Screw-attach moldings to substrate at intervals not over 16" o.c. and not more than 3" from ends, leveling with ceiling suspension system to tolerance of 1/8" in 12'-0". Miter corners accurately and connect securely.

F. Ceiling Tiles:

1. Ceiling tile shall be installed in accordance with manufacturer's instructions.

G. Access Identification:

1. Locate acoustical units providing access and access panels in vicinity of those components of concealed utilities systems which require periodic inspection, maintenance or operation, such as valves, traps, coils, dampers, strainers, monitoring devices, switches and cleanouts. Determine number and location of ceiling access units and panels after installation of various control items of mechanical and electrical work for which access is required. Minimum size of access units, 24 by 24 inch. See Specification Section 15841 for access requirements for ductwork.

2. Identify acoustical units providing access and access panels as follows:

a. Provide pins with colored spherical head 3/16-inch in diameter and shaft one inch long minimum, to identify different services above acoustical units providing access.

b. Furnish pins of color specified for required access to the various mechanical and plumbing systems above acoustical units as follows:

Color	Signifies
Red	Sprinkler System: Valves and Controls
Green	Domestic Water: Valves and Controls
Yellow	Chilled Water and Heating Water
Blue	Ductwork: Dampers and Controls
Black	Gas: Laboratory, and Air

c. Attach pins with color head visible on exposed undersurface of acoustical unit by piercing through unit and securing pin to back of unexposed top surface with a spring-type captive clip or other device that can easily be removed without damaging acoustical units or pins.

3. In lieu of colored pins, acoustical lay-in panels required for access may be identified by having colored markers attached to the runners on opposite sides of the access units.

a. Make colored markers of paper or plastic, 1/4 to 3/8-inch in diameter with pressure sensitive adhesive on one side.

b. Use same color on exposed side of markers as required for colored pins.

3.02 CLEANING

After ceilings have been installed, they shall be cleaned of smudges, handprints, and other marks. Remove and replace units which are damaged or improperly installed.

END OF SECTION

SECTION 09650

RESILIENT FLOORING

PART 1 - GENERAL

1.01 RELATED DOCUMENTS

A. Drawings and general provisions of Contract, including General and Supplementary Conditions and Division-1 Specification sections, apply to work of this section.

1.02 DESCRIPTION

A. The types of work include, but are not limited to, the following:

1. Solid vinyl tile flooring.

2. Resilient base.

3. Solid vinyl reducer strips at exposed edges of flooring.

4. Static Control sheet flooring.

1.03 QUALITY ASSURANCE

A. Provide each type of resilient flooring as produced by a single manufacturer, including recommended primers, adhesive and edging strips.

1.04 SUBMITTALS

A. Samples: Prior to commencing work, submit samples of each flooring and base, including full range of colors and patterns, adhesive, filler and primer and edge strip. Obtain Sandia Delegated Representative's approval of sample prior to purchase or delivery to jobsite. Completed work shall match selected and approved samples.

B. Technical Data: Submit manufacturer's installation data for intended uses of each material intended for use as work of this section.

C. Submit manual with detailed information on care and maintenance of static control flooring.

1.05 PRODUCT HANDLING

A. Deliver materials to the project site in the manufacturer's original unopened containers, clearly marked to indicate pattern, gauge, lot number and sequence of manufacture.

B. Store materials in original containers at not less than 65 degrees F for at least 48 hours before start of installation.

1.06 JOB CONDITIONS

A. Maintain minimum temperature of 65 degrees in spaces to receive resilient flooring for at least 48 hours prior to installation, during installation, and for not less than 48 hours after installation. Subsequently, maintain minimum temperature of 55 degrees F in areas where work is completed.

B. Install flooring after other finishing operations, including painting, have been completed. Moisture content of concrete slabs, building air temperature, and relative humidity must be within limits recommended by the manufacturer.

1.07 ATTIC STOCK

A. Deliver to Sandia the following packaged replacement materials:

1. Ten cartons of each type, color and pattern of vinyl tile installed in the corridors.

2. Twenty cartons of vinyl tile installed in a laboratories.

3. Two cartons for each color and size of base used.

4. Ten lineal yards of static control flooring in one piece.

PART 2 - PRODUCTS

2.01 MATERIALS

A. Solid Vinyl Composition Tile: (VCT-1)

1. 12" x 12" x 1/8" thick; Fed. Spec. SS-T-312B, Type III. Composition 1, asbestos-free.

2. Critical Radiant Flux: More than .45 watts/cm2.

3. Color and Pattern: Refer color schedule.

B. Solid Vinyl Composition Tile: (VCT-2, VCT-3)

1. 12" x 12" x 1/8" thick; Fed. Spec. SS-T-312B(1), Type IV, Composition 1, asbestos free.

2. Critical Radiant Flux: More than 0.45 watts/cm^2.

3. Color and Pattern: Refer color schedule.

C. Resilient Base:

1. A 4" rubber top-set cove base. Furnish internal and external corners and end stops from preformed units.

2. Furnish straight base where carpet occurs.

3. Color: Refer color schedule.

D. Edge Strips:

1. Solid vinyl reducer strip shall be furnished at all locations where flooring edges are exposed. Reducer strips shall be black and shall be installed using recommended adhesive.

E. Static Control Flooring: Polyflor XL by Halstead or approved equal.

1. Size: 6'-6" x 49' x 2.0mm thick.

2. Flame spread: Less than 75 per ASTM E-84 and Class 1 per ASTM E648.

3. Smoke Density: Passes ASTM E 662 (NFPA 258-1976) 450 or less.

4. When installed and tested in accordance with NFPA 99, flooring shall have an average resistance to ground, and an average resistance between electrodes placed three feet apart, of 1 x 10^7 minimum to 1 x 10^9 maximum ohms.

5. Static Decay: 5,000 volts to 500 volts in less than 0.25 seconds per Federal Test Method 101.

F. Primers, Adhesives and Fillers:

1. Compatible with flooring and base material as recommended in writing by material manufacturer to meet the job conditions involved.

G. Wax:

1. Approved brand of carnauba wax shall be applied in strict conformance with manufacturer's printed instructions, immediately prior to Sandia's acceptance of building.

2. Do not wax static control flooring.

PART 3 - EXECUTION

3.01 PREPARATION

A. Provide adequate ventilation to take care of moisture and volatile fumes.

B. Sweep surfaces to receive resilient coverings, removing paint, varnish, wax, grease, oil, remainder of plaster droppings, and other foreign matter. Fill cracks or other depressions which interfere with a satisfactory installation, using flooring manufacturer's recommended type material for specific job conditions. Insure surfaces are dry prior to application of primer or adhesive. Report to Contractor floor slabs not meeting tolerance of 1/8" in 10 feet for correction before starting installation.

3.02 INSTALLATION

A. General:

1. Perform work in accordance with manufacturer's printed recommendations.

2. If adhesive dries or films over before tile is set it shall be removed and area recoated.

3. Install flooring and base with tight joints, true, level and even. Lay tile flooring square with axis of room starting on center lines of rooms with tile joint or tile center so border tile are not less than 6 inches wide.

a. Cut flooring mechanically to produce square and true edges.

b. Scribe trim to pipes, jambs, permanent cabinets and similar work.

4. Base shall be installed by solidly coating both the wall where the base occurs and the back of the base. Hand-roll base to wall only once. Spot application of adhesive will not be accepted. Scribe base accurately to trim. Install in long lengths, minimum 18 inch long filler pieces, top and toe continuously

cemented to wall and floor. Provide factory-made external corners and end stops where base ends at jambs and offsets.

3.03 CLEANING AND PROTECTION

A. Vinyl Tile:

1. First Waxing: Clean flooring in accordance with manufacturer's instructions. Apply one coat of wax diluted with one part water to two parts wax and buff with a polishing machine. Hand buff areas inaccessible to machine.

2. Final Waxing: Immediately prior to final inspection, remove protection and again wax flooring same as first waxing. Perform cleaning as required prior to final waxing.

B. Static Control flooring:

1. Mop flooring with cleaner recommended by flooring manufacturer. Dry buff to restore sheen.

2. Do not wax.

C. Protection: Cover resilient flooring work with a heavy non-asphaltic, nonstaining type building paper where subsequent construction operations occur. Protect work until completion and acceptance of building.

"END OF SECTION"

SECTION 09680

CARPETING

PART 1 - GENERAL

1.01 RELATED DOCUMENTS

A. Drawings and general provisions of Contract, including General and Supplementary Conditions and Division-1 Specification sections, apply to work of this section.

1.02 DESCRIPTION

A. The extent of each type of carpeting is shown on the drawings and in schedules.

1.03 QUALITY ASSURANCE

A. Manufacturer: A firm with at least 5 years of experience in production of tufted carpet of type and quality similar to that required for project; and who will, when requested, send a qualified technical representative to project site to advise on proper installation procedures.

B. Installer: A firm with not less than three (3) years of experience in installation of commercial carpet, by methods similar to those required for this project.

C. Flame Spread Rating: Provide carpet which has been tested and passes Methenamine Pill Test per ASTM D 2859.

D. General Standard: "Carpet Specifiers Handbook" by The Carpet and Rug Institute; for definitions of terminology not otherwise defined herein, and for general recommendations and information.

1.04 SUBMITTALS

A. Submit 6 copies of manufacturer's data on carpet and carpeting materials, showing that materials comply with requirements of data sheets and specifications; also including installation instructions.

B. Samples: Submit 3, 18" x 18" samples of each type, color, texture and pattern of carpet required. Submit 3, 6" long samples of carpet edge guard stripping. Sandia Delegated Representative's review of samples will be for color, pattern and texture

only. Compliance with other requirements is the exclusive responsibility of the Contractor.

C. Shop Drawings: Submit layout drawings showing seam locations for roll goods.

1.05 SANDIA'S MAINTENANCE STOCK

A. Roll Goods: Deliver usable scraps to Sandia Delegated Representative as designated, properly packaged and identified for future maintenance use. Usable scraps are defined as roll ends less than 4'-0" long, and pieces larger than 3 sq. ft. in area and 8" in width. Dispose of smaller pieces.

B. Carpet Tiles: Provide 9 cartons of each type carpet border tiles. Provide 35 cartons of each type of carpet field tile. Tiles shall be in original cartons and delivered to a location designated by Sandia Delegated Representative.

1.06 MAINTENANCE MANUAL

A. Submit manual of carpet manufacturer's complete recommendations for the care, cleaning and maintenance of each type of carpeting.

1.07 PRODUCT DELIVERY AND STORAGE

A. Deliver carpeting materials in protective wrapping, and store inside, protected from weather, moisture and soiling.

1.08 JOB CONDITIONS

A. Coordinate installation of carpeting with preparations for project substantial completion and closeout. Delay installation until space enclosures and other general finish work have been completed; and until continuing construction traffic in carpeted areas will be minimal; and until ambient conditions are being maintained by operation of HVAC system to comply with specified requirements including carpet manufacturer's recommendations.

1.09 SPECIAL PROJECT WARRANTY

A. Provide special project warranty, signed by Contractor, Installer, and Manufacturer (Carpet Mill), agreeing to repair or replace defective materials and workmanship of carpeting work during 2-year warranty period following building acceptance. Attach copies of product warranties.

PART 2 - PRODUCTS

2.01 CARPET MATERIALS AND CONSTRUCTION

A. Detailed performances for each required type of carpet are specified in the data lists to extent not specified by provisions of this section.

1. Data List

Manufacturer	Interface
Description and Pattern	Palette Plus Series, Tweeds 4000
Face Yarn	Chromafast Nylon (ThermallyPigmented)
	Fusion Bonded, Cut Pile, 26 oz.
	weight, 0.180 height
Density Factor	532,708
Backing Structure	GlasBac Vinyl
Total Weight	159 oz.
Modular Size	18" x 18"

2. Data List - Roll Goods

Manufacturer	Interface
Description and Pattern	Palette Plus Series Tweeds 4000
Face Yarn	Chromafast Nylon (Thermally Pigmented)
Face Construction	Fusion Bonded, Cut Pile, 28 oz.
	weight, 0.180 height
Total Weight	78 oz.
Total Thickness	.200
Sheet	54" wide
Backing	Synvar
Installation	Direct Glue-down
Density Factor	532,708

3. Data List - Tiles

Manufacturer	Interface
Description and Pattern	Palette Plus Series Solids 2000
Face Yarn	Chromafast Nylon (ThermallyPigmented)
Face Construction	Fusion Bonded, Cut Pile, 28 oz.
	weight, 0.250 height
Density Factor	323,732
Backing Structure	GlasBac Vinyl

Total Weight	158 oz.
Modular Size	18" x 18"

4. Data List - Roll Goods

Manufacturer	Interface
Description and Pattern	Palette Plus Series Solids 2000
Face Yarn	Chromafast Nylon (ThermallyPigmented)
Face Construction	Fusion Bonded, Cut Pile, 28 oz. weight, 0.250 height
Density Factor	323,732
Total Weight	88 oz.
Total Thickness	0.270"
Sheet	54" wide
Backing	Synvar
Installation	Direct Glue Down

2.02 CARPET ACCESSORIES

A. Carpet Edge Guard: Manufacturer's standard extruded or molded vinyl or rubber carpet edge guard of the profile and size indicated. Provide colors selected by Sandia Delegated Representative from standard colors available in the industry (any manufacturer's product).

B. Installation Adhesive: Provide adhesive recommended by carpet manufacturer for adequate adhesion and water resistance at each application but which will allow removal of carpet with minimum damage to carpeting materials and substrate and which complies with requirements for overall flammability rating for carpeting installation.

C. Seaming Cement: Hot-melt seaming adhesive of the type recommended by the carpet manufacturer for taping seams and buttering cut edges of carpet backing (and bottom of face pile) at seams to form secure seams and eliminate pile loss at seams.

D. Miscellaneous Materials: Provide tapes, adhesives and other accessory items and materials of types recommended by carpet manufacturer and as recommended by Installer for project requirements.

2.03 CARPET FLAMMABILITY

A. Radiant Panel Test: In corridors and spaces of project other than individual rooms or suites, provide carpet which has been tested (with cushions in place) by the

Flooring Radiant Panel Test (FRPT), NBS IR 75-950, with ratings not lower than the following:

1. FRPT Rating: 0.22

PART 3 - EXECUTION

3.01 PREPARATION

A. Measure each space to receive carpeting as a basis of supplying, cutting and seaming the carpet. Do not scale the drawings or calculate sizes from dimensions shown.

B. Do not install carpet over concrete with either excessive moisture or dust-producing surface which is not adequately sealed. Seal all powdery or porous surfaces with sealer recommended by carpet tile manufacturer. Clean surfaces to be carpeted immediately prior to installation of carpeting materials by vacuum cleaning.

C. Clear away debris, cementitious deposits, and similar obstructions or substrates to receive carpeting. Fill cracks and voids including honeycombed concrete, but do not obstruct expansion joints.

D. Sequence carpeting installation with other work in a manner which will minimize possibility of damage or deterioration to carpeting, and yet not delay completion of project.

3.02 INSTALLATION

A. General:

1. Comply with manufacturer's instructions and recommendations. Place seams in the directions indicated and as accepted on shop drawings. Maintain direction of pattern and texture including lay of pile. Maintain uniformity of carpet tile direction and lay of pile.

2. Extend carpet under open-bottomed and raised-bottomed obstructions and under removable flanges of obstructions. Extend carpet into closets and alcoves of rooms indicated to be carpeted unless another floor finish is indicated for such spaces. Extend carpet under movable furniture and equipment unless otherwise indicated.

3. Provide cutouts as indicated for removable access devices in substrate. Bind edges as neatly as possible and secure both sides of cuts to the substrate. Use double-faced tape on carpet cutouts which must be lifted from substrate to

gain access to devices unless otherwise indicated. Cut only 3 sides where feasible to provide carpet flap in lieu of fully-removable cutout.

B. Carpet Tiles:

1. Determine the center of the room using standard tile laying methods. The center chalk lines, dividing the room into quadrants, should be off-center, if necessary, to ensure that perimeter modules will be half-size or larger.

2. On both sides of chalk line, apply a strip of adhesive at least 9" in width, using a twist-textured paint roller. When adhesive is ready, lay modules firmly along these anchors lines. Fill in each quadrant section laying using the "stair step" technique, completing the installation from center to corner of room in each quadrant, then moving to the next quadrant.

3. In large areas, a control grid of adhesive should be laid every 10', as control of the uniformity of the installation.

4. As each module is installed, ensure that the installation remains square and conforms to chalk lines.

5. Adhere perimeter tiles and cut tiles with a full spread of adhesive. Dry fit all cut tiles and apply adhesive to tile back after tile has been cut. In corridor areas, use full tiles down the center and cut perimeter tile borders.

C. Glued-Down Installation: (Roll Goods)

1. Install a test sample to demonstrate proper adhesion and removal capability of the bonding system. Demonstrate installation and removal procedure to Sandia personnel.

2. Fit sections of carpet into each room or space prior to application of adhesive. Trim off mill edges unless carpet has been pretrimmed. Maintain straight seams.

3. Apply seaming cement on cut edges of carpet at seams without being in evidence on face of carpet but securing base of pile at cut.

4. Apply adhesive uniformly to substrate in accordance with manufacturer's instructions. Butt carpet edges tightly together to form seams without gaps. Roll lightly to eliminate air pockets and ensure uniform total-area bond of carpet to substrate. Remove adhesive promptly from face of installed carpet.

3.03 CLEANING AND PROTECTION

A. Remove debris from installation, carefully sorting pieces to be saved from scraps to be disposed of.

B. Vacuum carpet with a commercial machine with rotating agitator or beater in nozzle. Remove spots and replace carpet where spots cannot be removed.

C. Advise Contractor of areas which should be protected during remainder of the construction period so that carpet will be in undamaged and unsoiled condition at time of acceptance. Recommend type of nonstaining cover material that should be used for protective cover.

"END OF SECTION"

SECTION 09702

RESINOUS FLOORING (EPOXY)

PART 1 - GENERAL

1.01 RELATED DOCUMENTS

A. Drawings and general provisions of Contract, including General and Supplementary Conditions and Division-1 Specification sections, apply to work of this section.

1.02 DESCRIPTION

A. Two-component epoxy resin, trowel applied with integral sanitary coved base.

1.03 QUALITY ASSURANCE

A. Provide each component of flooring by a single manufacturer, including recommended bonding agent, body coat, and sealer.

B. Installation shall be by a qualified installer, approved by the manufacturer and shall be in accordance with manufacturer's written installation instructions.

C. References to ASTM and Military standards shall mean the latest edition of that standard.

D. Provide one of following products or approved equal:

1. Crossfield Products Corp. - Cheminert "K"
2. Selby Battersby & Co. - Selbaclad 425
3. HB Fuller Company - Tufflite
4. Mameco International - Monile E-300

1.04 SUBMITTALS

A. Submit manufacturer's literature, technical data, and recommendations for the specified system.

B. Submit 6-inch square sample of actual flooring material which does not have additional slip resistant texture.

1.05 JOB CONDITIONS

A. Maintain concrete slab temperature at a minimum of 60 degrees for 48 hours prior to, during, and after installation.

B. Do not begin installation until work which could cause damage, dirt, dust, or interruption of installation is complete. Building shall be dry and closed-in prior to installation.

1.06 PRODUCT DELIVERY AND STORAGE

A. Deliver materials to the jobsite in new, unopened containers with intact factory-applied labels. Store materials in accordance with manufacturer's instructions.

PART 2 - PRODUCTS

2.01 MATERIALS

A. Epoxy Flooring: Two-component, epoxy resin formulation incorporating suitable chemical-resistant aggregates. A trowelable, jointless floor with integral sanitary cove base.

1. Physical properties:

a. Thickness: 1/4 inch minimum

b. Compressive strength: 10,900 psi minimum per ASTM C- 109.

c. Tensile strength: 1,895 psi minimum per ASTM D-638.

d. Hardness: Shore D Durometer hardness, 65-85 per ASTM D-2240.

e. Non-Slip Properties for MIL-D-3134F:

Static Friction

	Leather	Rubber
Dry	0.51	0.58
Wet	0.62	0.72
Oily	--	0.55

Sliding Friction

	Leather	Rubber
Dry	0.57	0.61

Wet	0.70	0.73
Oily	--	0.55

B. Primer: Bond coat recommended by manufacturer.

C. Sealer: Specifically formulated and manufactured for use with the body coat.

D. Color: Refer color schedule, Section 09900A.

PART 3 - EXECUTION

3.01 SURFACE PREPARATION

A. Remove laitance, grease, bond-inhibiting concrete curing sealers and other foreign matter.

B. Etch concrete surfaces in accordance with manufacturer's instructions if required by manufacturer's written instructions.

C. Conduct adhesion tests prior to installation.

D. Patch cracks and other imperfections in substrate.

3.02 INSTALLATION

A. Install per manufacturer's instructions and generally as follows:

1. Apply by brush or trowel a thin coating of manufacturer's primer or bond coat.

2. Trowel apply resin and aggregate mixture to a minimum thickness of 1/4".

3. Top Coat:

a. Apply pigmented topcoat so that color is uniform.

3.03 CLEANING AND PROTECTION

A. Remove surface blemishes from installed surface using cleaners and procedures as recommended by manufacturer. Protect installed floor from damage by use of heavy Kraft paper or other covering.

B. After completion of project prior to final inspection, thoroughly clean floors and apply final topcoat over scuffed or worn areas.

"END OF SECTION"

SECTION 09900

PAINTING

PART 1 - GENERAL

1.01 RELATED DOCUMENTS

A. Drawings and general provisions of Contract, including General and Supplementary Conditions and Division-1 Specification sections, apply to work of this section.

1.02 DESCRIPTION

A. The extent of the painting work is shown on the drawings and schedules and as herein specified. The work includes painting and finishing of interior and exterior exposed items and surfaces throughout the project and the furnishing of all scaffolding.

1. Surface preparation, priming, and coats of paint specified are in addition to shop priming and surface treatment specified under other sections of the work.

B. The work includes field painting of exposed conduit, bare and covered pipes and ducts (including color coding), and of hangers, exposed steel and iron work, and primed metal surfaces of equipment installed under the mechanical and electrical work including electrical panel boards and cable trays.

1.03 SURFACES NOT TO BE PAINTED

A. The following listed services and items are not to be painted; however, the list is incomplete in that surfaces not normally painted have been excluded:

1. All aluminum, brass, bronze, copper, stainless steel and chrome-plated steel.

2. Acoustical tile ceilings.

3. Interior surfaces in chases.

4. Code required labels such as UL and FM.

5. Equipment identification, performance rating, name or nomenclature plates.

1.04 JOB CONDITIONS

A. Contractor shall examine other sections of the specifications to determine which items are to be factory finished or shop primed. Prime coated work shall be finished by Contractor.

B. Shop priming of ferrous metal items is included under the various sections for structural steel, miscellaneous metal, hollow metal work and similar items. Also for fabricated components such as architectural woodwork, wood casework, and shop fabricated or factory-built mechanical and electrical equipment and accessories. Coordinate shop primers with finish paints to assure compatibility.

C. Atmospheric Conditions:

1. Do not apply paint to surfaces upon which there is visible frost or ice. Do not apply paint materials during rain or other damp conditions. Do not begin or continue application within 24 hours after such damp conditions.

2. During exterior painting, the temperature of the surfaces to be painted and of the atmosphere in contact therewith shall be maintained at or above 50 degrees F. for water-thinned coatings, and 45 degrees F. for other coatings for at least 24 hours prior to applications.

3. Interior surfaces shall be clean and dry before application and the Contractor shall maintain an ambient temperature of not less than 60 degrees F. for 24 hours prior to, and a minimum of 24 hours after paint or coating application to interior surfaces.

1.05 QUALITY ASSURANCE

A. Manufacturers offering products to comply with the requirements for the paint specifications include the following: Sherwin-Williams, Glidden Paints, Tnemec, Pratt and Lambert, and Kelly-Moore, Ameri-Tone.

1.06 SUBMITTALS

A. Submit manufacturer's technical information including paint label analysis and application instructions.

B. Submit a one-quart sample, taken at random from sealed paint containers, for each type and color to be furnished in quantities of 5 gallons or more. Prior to taking samples, the contents of the sampled containers shall be thoroughly mixed. Samples shall be clearly identified by designated name, specification number, batch number, project control number, intended use, and quantity involved. These samples shall be retained by Sandia to be used for possible future testing should the materials appear to be defective during or after application.

C. The Contractor shall, at least thirty (30) days in advance of beginning work, submit to Sandia's Delegated Representative a complete schedule of the manufacturer's products he proposes to use, together with the trade names of the specific articles to be used, and estimate of the quantities of each item. Corresponding to this paint schedule, the Contractor shall also submit an actual sample color board of each product submitted and in the color proposed to most nearly match that as specified in the color schedule. The color boards shall be at least 80 square inches prepared on paint-out cards or hardboard in the actual sheen and finish as that proposed for the work. After approval is obtained from the Sandia Delegated Representative, no substitution may be made without written approval.

1.07 PRODUCT DELIVERY, STORAGE AND HANDLING

A. Paint materials shall be delivered to the site in new, original, unopened containers bearing manufacturer's name, trade name, and label analysis. Pigmented paints shall be furnished in containers not larger than 5 gallons.

B. Paint shall be stored and mixed in a well-ventilated but dry, lockable area. Paint and solvent containers shall be resealed after each day's work, and soiled cloths and oily rags that might constitute a fire hazard shall be placed in closed metal containers or destroyed at the end of each day.

C. No kerosene or gasoline shall be used for any purpose by the Contractor and none shall be kept on the jobsite.

PART 2 - PRODUCTS

2.01 MATERIALS

A. The term "Paint" as used herein means all coating systems materials, including primers, emulsions, enamels, stains, sealers and fillers and other applied materials whether used as prime, intermediate or finish coats.

B. Colors shall be standard with one manufacturer; products submitted by other manufacturers may vary only slightly from the selected colors and be substituted only after approval by the Sandia Delegated Representative.

1. After one manufacturer's product of a certain color and purpose has begun application, it shall be used throughout the job. No paint of different brands may be mixed together or blended onto surfaces.

C. Schedule:

1. Products listed by name are intended to set a standard of quality and the character of paint required and are not intended to exclude the products of other manufacturers of equal quality for the purpose stated.

2. The following schedule is not intended to be a complete list of materials and work required but a guide to the type, quality and finish required for the various surfaces. Paint all exposed surfaces whether or not colors are designated in "schedules," except where the natural finish of the material is specifically noted as a surface not to be painted. Where items or surfaces are not specifically mentioned, paint these the same as adjacent similar materials or areas. If color or finish is not designated, the Sandia Delegated Representative will select these from standard colors available for the materials systems specified.

3. Exterior Paint Systems:

   a. Metals:

      (1) Prime Coated Steel and Miscellaneous Metals:

         Semigloss Alkyd Enamel
         Patch Shop Coat, as required
         2 coats Tnemec Enduratone Series 23 (MDF 4.2 mils)

      (2) Boilers, Pipes, and Stacks:

         Heat-Resistant Silicone Aluminum
         2 coats Tnemec Series 39-1261 (MDF 2.0 mils)

      (3) Unprimed Ferrous Metal (Not Galvanized):

         Semigloss Alkyd Enamel
         1 coat Tnemec 10-99 Primer (MDF 2.3 mils)
         2 coats Tnemec Enduratone, Series 23 (MDF 4.2 mils)

      (4) Galvanized Surfaces:

         Semigloss Alkyd Enamel
         1 coat Tnemec 32-1210 Tneme-Grip (MDF .3 mils)
         2 coats Tnemec Enduratone, Series 23 (MDF 4.2 mils)

4. Interior Paint Systems:

   a. Concrete Walls and Ceilings:

      Semigloss Alkyd Enamel

1 coat Tnemec 54-560 Filler
2 coats Tnemec Series 23 Enduratone (MDF 3.0 mils)

b. Concrete Floors:

Semigloss Polyamide Epoxy
2 coats Tnemec Series 67 Tneme-Tread (MDF 4.0 mils)

c. Drywall Construction:

Low-Lustre Acrylic Latex
1 coat Tnemec PVA Sealer
2 coats Tnemec Series 6 Tneme-Cryl (MDF 4.0 mils)

Semigloss Alkyd Enamel
1 coat Tnemec PVA sealer
2 coats Tnemec Series 23 Enduratone (MDF 3.0 mils)

Semigloss Epoxy
1 coat Tnemec PVA sealer
2 coats Tnemec 108 Ceramlon (MDF 6.0 mils)

d. Metals:

(1) Metal Doors, Frames and Miscellaneous Metal:

Semigloss Alkyd Enamel
Patch shop coat as required
2 coats Tnemec Series 23 Enduratone (MDF 3.0 mils)

(2) Exposed Structural Steel, Metal Deck and Steel Joists:

Semigloss Alkyd Enamel
Patch shop coat, as required
1 coat Tnemec Enduratone Series 23 (MDF 2.0 mils)

(3) Galvanized Metal including Exposed Ductwork:

Semigloss Alkyd Enamel
1 coat Tnemec 32-1210 Tneme-Grip (MDF 0.5 mils)
2 coats Tnemec Enduratone Series 23 (MDF 3.0 mils)

(4) Equipment, including Exposed Piping and Ductwork:

Semigloss Alkyd Enamel
If factory primed, patch shop coat.

If not:
1 coat Tnemec 10-99 Primer (MDF 2.0 mils)
2 coats Tnemec Enduratone Series 23 (MDF 3.0 mils)

e. Wood:

(1) Doors (Transparent Finish):

Natural Finish open-grained woods: (Filled finish)
Architectural Woodwork Institute - Finish System #3
Premium Grade

(2) Tambour Walls:

2 coats Tnemec Series 23 Enduratone (MDF 3.0 mils)
2 coats Ameritone Spar Varnish 5500.

D. Thinners: Where thinning is necessary, only the products of the manufacturer furnishing the paint, and for the particular purpose, shall be allowed. Thinning shall be done in accordance with the manufacturer's instructions, as well as with the full knowledge and approval of the Sandia Delegated Representative.

E. Cleaning Solvents: Cleaning solvents to be used shall be as recommended by the product manufacturer. However, cleaning solvents shall be of low toxicity and shall have a flashpoint in excess of 100 degrees F.

PART 3 - EXECUTION

3.01 PREPARATION

A. Hardware, hardware accessories, removable shelves, machined surfaces, plates, lighting fixtures, sprinkler heads or fire detection elements, and similar items in contact with painted surfaces and not to be painted shall be removed, masked, or otherwise protected prior to surface preparation and painting operation. The Contractor shall also be responsible for the proper reinstallation of removed items.

B. Provide drop cloths to protect floors, equipment and other work from damage during the paint operation.

C. Clean surfaces before applying paint or surface treatments. Remove oil and grease prior to mechanical cleaning. Schedule cleaning and painting so that contaminants from the cleaning process will not fall onto wet, newly-painted surfaces.

D. Provide a minimum of 20 footcandles illumination for surfaces to be painted or coated.

3.02 SURFACE PREPARATION

A. Cementitious Materials:

1. Prepare cementitious surfaces of concrete to be painted by removing efflorescence, chalk, dust, dirt, grease, oils, and by roughening as required to remove glaze.

2. Determine the alkalinity and moisture content of the surfaces to be painted by performing appropriate tests. If the surfaces are found to be sufficiently alkaline to cause blistering and burning of the finished paint, correct this condition before application of paint. Do not paint over surfaces where the moisture content exceeds that permitted in the manufacturer's printed directions.

3. Clean concrete floor surfaces scheduled to be painted with a commercial solution of muriatic acid, or other etching cleaner. Flush floor with clean water to neutralize acid, and allow to dry before painting.

B. Wood:

1. Clean wood surfaces to be painted of dirt, oil, or other foreign substances with scrapers, mineral spirits, and sandpaper, as required. Sandpaper smooth those finished surfaces exposed to view, and dust off. Scrape and clean small, dry, seasoned knots and apply a thin coat of white shellac or other recommended knot sealer, before application of the priming coat. After priming, fill holes and imperfections in finish surfaces with putty or plastic wood-filler. Sandpaper smooth when dried.

C. Ferrous Surfaces:

1. Clean ferrous surfaces, which are not galvanized or shop-coated, of oil, grease, dirt, loose mill scale and other foreign substances by solvent or mechanical cleaning.

2. Touch-up shop-applied prime coats wherever damaged or bare. Clean and touch-up with the same type shop primer.

D. Galvanized Surfaces:

1. Clean free of oil and surface contaminants with an acceptable non-petroleum based solvent.

3.03 MATERIALS PREPARATION

A. Mix and prepare painting materials in accordance with manufacturer's directions.

B. Store materials not in actual use in tightly covered containers. Maintain containers used in storage, mixing and application of paint in a clean condition, free of foreign materials and residue.

C. Stir materials before application to produce a mixture of uniform density, and stir as required during the application of the materials. Do not stir surface film into the material. Remove the film and if necessary, strain the material before using.

3.04 APPLICATION

A. General:

1. Workmanship shall be of the very highest standard by skilled mechanics and the materials shall be applied in strict accordance with the limits set by the manufacturer for its use. Paint shall be applied in a manner that will produce finished surfaces free from runs, drops, ridges, waves, laps, brush marks and variations in color, texture and finish. The hiding shall be complete and each coat shall be so applied as to produce film of uniform thickness. Special attention shall be given to insure that all surfaces including edges, corners, crevices, welds and rivets receive a film thickness equivalent to that of adjacent painted surfaces.

2. Paint surfaces behind movable equipment and furniture the same as similar exposed surfaces. Paint surfaces behind permanently-fixed equipment or furniture with prime coat, same as adjacent surfaces, only before final installation of equipment.

3. Paint interior surfaces of ducts, where visible through registers or grilles, with a flat, nonspecular black paint.

4. Paint the back sides of access panels and removable or hinged covers to match the exposed surfaces.

5. Finish exterior doors on tops, bottoms, and side edges the same as the exterior faces.

6. Sand lightly between each succeeding enamel or varnish coat.

7. Finish planed, sanded or cut surfaces of interior prefinished wood doors.

8. Gypsum wallboard above ceilings shall be prime coated.

B. Scheduling Painting:

1. Apply the first-coat material to surfaces that have been cleaned, pretreated or otherwise prepared for painting as soon as practicable after preparation and before subsequent surface deterioration.

2. Allow sufficient time between successive coatings to permit proper drying. Do not recoat until paint has dried to where it feels firm, does not deform or feel sticky under moderate thumb pressure, and the application of another coat of paint does not cause lifting or loss of adhesion of the undercoat.

C. Method of Application:

1. Gypsum board shall be painted with brush, roller or spray. The first coat on gypsum board shall include such repeated touching up of suction spots or overall applications of primer sealer as necessary to produce a uniform color and gloss.

2. Metal may be coated by brush, spray or dipping. Spot-prime abraded areas in shop coats before beginning field coats. Ferrous metal items that will not be exposed either to view or to weather, excluding galvanized items, shall be coated with primer before surfaces are built-in or otherwise inaccessible.

3. Interior wood surfaces to receive stain or natural finish shall be sanded smooth and thereafter stained or finished to the exact approved shade and then lightly resanded. Oak and other open-grain wood shall, in addition, be given a coat of paste wood filler not less than 8 hours after application of stain. Excess filler shall be removed and the surface then sanded smooth. Each varnish coat shall be lightly sanded prior to the application of subsequent coat.

   a. Woodwork shall have nail holes or other imperfections puttied up and sanded smooth after the first coat of paint is applied. The putty for work where a clear finish is called for shall match the color of the finished work.

   b. Wood cabinets and other millwork shall be backprimed. Finished surfaces shall not be primed until after erection. Concealed parts on all millwork shall be backprimed before placing.

4. Coatings for other surfaces may be brushed, rolled, or sprayed as required or recommended by the manufacturer. Brushes used for emulsion paint shall be soaked in water for a period of two hours prior to brushing and rollers for applying enamels shall have a short nap.

3.05 TOUCH-UP AND CLEANUP

A. During the progress of the work, remove from the site discarded paint materials, rubbish, cans and rags at the end of each workday.

B. Upon completion of the building, examine painted surfaces and carefully touch up and repair marred or damaged spots, rework surfaces that have been repaired by other trades, clean off misplaced paint and leave the entire work in first-class condition, acceptable to Sandia Delegated Representative.

3.06 TESTING

A. Where mil thicknesses are required, they shall be checked by the following methods.

1. Ferrous Metals: Magnetic gauge following procedure outlined in SSPC-PA2, Section IV.

2. Nonferrous Surfaces: Tooke Gauge

B. Take readings at random locations at the rate of 5 per 100 square feet of surface. Average of readings for given area shall be at or above MDF specified. No individual reading shall be more than 20 percent below recommended MDF.

"END OF SECTION"

SECTION 09952

VINYL WALL COVERING

PART 1 - GENERAL

1.01 RELATED DOCUMENTS

A. Drawings and general provisions of Contract, including General and Supplementary Conditions and Division-1 Specification sections, apply to work of this section.

1.02 DESCRIPTION

A. Extent of vinyl wall covering is shown on drawings and in schedules.

1.03 QUALITY ASSURANCE

A. Test Panels: Install test panels for full-width and corner applications of vinyl wall covering materials in areas designated by the Sandia Delegated Representative. Test panels accepted by the Sandia Delegated Representative will be used as the standard of comparison for the work. Replace test panels which are not acceptable to Sandia Delegated Representative until satisfactory installation is achieved.

B. Engage an experienced Installer, approved by wall covering manufacturer, who has specialized in the installation of wallcoverings similar to that required for this project.

C. Each type of wallcovering shall bear the same lot and dye number.

1.04 SUBMITTALS

A. Submit each manufacturer's material specifications and installation instructions for each type of vinyl wall covering and accessories.

B. Submit 3, 12" square samples of each type of vinyl wall covering.

C. Submit the vinyl wall covering manufacturer's printed instructions for maintenance of the installed work. Include name of manufacturer, material brand name, color and texture designation, and precautions for the use of cleaning materials and methods which could damage the wall covering.

1.05 DELIVERY AND STORAGE

A. Deliver materials to the project site in original packages or containers clearly labeled to identify manufacturer, brand name, quality or grade, lot number, dye number, and fire hazard classification..

B. Store materials in original undamaged packages or containers. Do not store vinyl wall covering fabric in an upright position. Maintain temperature in storage area above 40 degrees F., and not less than 65 degrees F. for at least 24 hours before installation.

1.06 JOB CONDITIONS

A. Maintain a constant minimum temperature of 65 degrees F. at areas of installation for at least 48 hours before, during, and 48 hours after the application of materials.

B. Areas to receive applications must have a reasonably constant temperature of 65 degrees F. measured at floor level.

PART 2 - PRODUCTS

2.01 MATERIALS

A. Fire Hazard Classification:

1. Provide materials bearing the UL label and marking, indicating the fire hazard classification of the wall covering, as determined by ASTM E 84.

2. Provide materials complying with the following fire hazard classifications:

a. Flame spread not more than 25.

b. Fuel contributed not more than 15.

c. Smoke developed not more than 25.

B. Vinyl Wall Covering:

1. General: Comply with FS CCC-W-408A.

a. Medium Duty: Type II; total weight not less than 13 oz. per sq. yd. with minimum vinyl coating (less fabric) 7 oz. per sq. yd.

2. Color: Refer color schedule, Section 09900A.

3. Pattern: Refer color schedule, Section 09900A.

C. Adhesive:

1. Manufacturer's recommended adhesive, primer and sealer, manufactured expressly for use with selected vinyl wall covering. Provide materials which are mildew-resistant and nonstaining to the wall covering.

2. Release Coat: Oil base sealer or enamel undercoater for drywall substrates.

PART 3 - EXECUTION

3.01 PREPARATION

A. Remove vinyl wall covering material from its packaging and allow to acclimatize to the area of installation 24 hours before application.

B. Prime and seal substrates in accordance with the vinyl wall covering manufacturer's recommendations for the type of substrate material to be covered.

C. Remove switchplates, wall plates, and surface-mounted fixtures in areas where wall covering is to be applied.

D. Verify that surfaces to be covered with vinyl wall covering do not exceed 4% moisture content.

3.02 INSTALLATION

A. Extend vinyl wall covering a minimum of 1" above finish ceiling line.

B. Place wall covering panels consecutively in the order they are cut from rolls, including filling of spaces above or below openings as required. Hanging direction shall be determined during the review of test panels.

C. Apply adhesive to back of wall covering and place in accordance with the manufacturer's instructions. Install seams vertically and plumb, and at least 6" away from any corner; horizontal seams will not be permitted. Place wall covering continuously over internal and external corners. Overlap seams and double-cut to assure tight closure. Roll, brush, or use a broad knife to remove air bubbles, wrinkles, blisters and other defects.

D. Trim selvages as required to assure color uniformity and pattern match at seams.

E. Remove excess adhesive along finished seams using warm water and a clean sponge, and wipe dry.

F. Install vinyl wallcovering with an intimate substrate bond, smooth, clean, without wrinkles, gaps or overlaps.

G. Replace removed plates and fixtures; verify cut edges of wall covering are completely concealed.

"END OF SECTION"

SECTION 09986

FIBERGLASS WALL PANELS

PART 1 - GENERAL

1.01 RELATED DOCUMENTS

A. Drawings and general provisions of Contract, including General and Supplementary Conditions and Division-1 Specification sections, apply to work of this section.

1.02 DESCRIPTION

A. Extent of fiberglass reinforced panels (FRP) in clean rooms is shown on drawings and in schedules.

1.03 QUALITY ASSURANCE

A. FRP panels shall be UL classified with a flame spread of 20 (Class 1) and a smoke development of 200 per ASTM E-84.

1.04 SUBMITTALS

A. Submit each manufacturer's material specifications and installation instructions for each type of FRP wall and ceiling covering and accessories.

B. Submit 3, 12" square samples of each type of FRP wall and ceiling covering and moldings.

C. Submit the manufacturer's printed instructions for maintenance of the installed work. Include name of manufacturer, material brand name, color and texture designation, and precautions for the use of cleaning materials and methods which could damage the panels.

1.05 DELIVERY AND STORAGE

A. Deliver materials to the project site in original packages or containers clearly labeled to identify manufacturer, brand name, quality or grade, and fire hazard classification.

B. Store materials in original undamaged packages or containers. Do not store in an upright position. Lay panels flat. Maintain temperature in storage area not less than 65 degrees F. for at least 24 hours before installation.

PART 2 - PRODUCTS

2.01 MATERIALS

A. FRP Wall Panels: Fire-X Glasbord by Dyrotech Industries or approved equal.

1. Size: 4' x 10'

2. Color: White

3. Nominal Thickness: 0.09"

4. Tensile Strength: 11×10^5 psi per ASTM D638.

5. Color: Beige.

B. Accessories: Provide nylon drive rivets and two-piece vinyl moldings necessary for a complete installation.

PART 3 - EXECUTION

3.01 INSTALLATION

A. Walls shall be dry, free from dirt, dust and grease. Gypsum board walls shall be taped and bedded and all low spots filled and sanded. High crowns shall be sanded flat.

B. Installation of FRP wall systems shall be in strict accordance with the selected manufacturer's published installation instructions.

1. Wall panels shall be applied utilizing 100% adhesive coverage. Nylon drive rivets shall be utilized at panel top and bottom and side edges.

3.02 CLEANING AND PROTECTION

A. Clean exposed surface of ceiling and wall panels and of trim, edge moldings and suspension members; comply with manufacturer's instructions of cleaning and touch-up of minor finish damage. Remove and replace work which cannot be successfully cleaned and repaired to permanently eliminate evidence of damage.

"END OF SECTION"

SECTION 10270

ACCESS FLOORING

PART 1 - GENERAL

1.01 RELATED DOCUMENTS

A. Drawings and general provisions of Contract, including General and Supplementary Conditions and Division-1 Specification Sections, apply to work of this section as if repeated herein.

1.02 DESCRIPTION

Definition: Access flooring is a complete portable assembly including a series of modular floor panels with an elevated supporting system (understructure) forming an accessible under-floor cavity to accommodate ducts, conduits, cables, piping and other services and to provide, where required, a plenum for air distribution. Refer to drawings for under-floor clearances, offsets, closures, and accessories required.

1.03 QUALITY ASSURANCE

A. Structural Performance: Provide manufacturer's standard access flooring system which, when installed, complies with the following minimum requirements for structural performance.

1. Floor Panels: Units including those with cutouts capable of supporting loads of type and magnitude indicated below:

a. Concentrated load of following magnitude, applied to one square inch located anywhere on panel, with a deflection under load and a permanent set not to exceed, respectively, 0.080" and 0.010".

1) 1,250 lbs.

b. Distributed load of following magnitude.

1) 200 lbs/sq. ft.

2. Pedestals: Pedestal assemblies capable of withstanding the following types of loads per pedestal, without panels or other supports in place.

a. Bending moment of 1000 inch-pounds.

b. Axial load of 5,000 lbs.

3. Grid System: Stringers capable, without panels in place, of supporting a concentrated load of 200 lbs. at center of span with a permanent set not to exceed 0.010".

4. Resistance to Seismic Forces: Entire access floor system capable of withstanding a horizontal force (Fp) of 10 psf plus 25% of access floor system weight including pedestals. (Fp=ZICpWp where Z = 1.0, I=1, Cp=0.3 and Wp=10 psf + dead load). Or 100# applied horizontal in any direction at top of each pedestal.

5. Ultimate Strength: Entire access floor system capable of sustaining twice the concentrated panel loading indicated.

B. Electrical Resistance of System: Provide manufacturer's standard access flooring system which, when installed, has the following electrical resistance characteristics:

1. Static-Control Floor Covering Resistance: Not less than 500,000 ohms nor more than 20,000 megohms measured across surface of floor covering through panel to understructure by test method for conductive flooring specified in NFPA 56A.

2. Panel to Understructure Resistance: Not more than 10 ohms.

C. Installer Qualifications: Firm who is approved by access flooring manufacturer and who has successfully installed access flooring systems of a scope similar to this project.

D. Provide steel floor panels with steel grid and steel pedestals as manufactured by:

1. Access Floor Division, USG Interiors

2. Tate Access Floors

E. NFPA Standard: Provide access flooring that, when installed, complies with NFPA No. 75.

F. Access floor shall be capable of resisting the horizontal force (Fp) in accordance with the current Uniform Building Code standards for a Laboratory in Seismic Zone 4.

G. Take field measurements prior to preparation of shop drawings and fabrication to ensure proper fitting of work.

1.04 SUBMITTALS

A. Submit manufacturer's technical data and installation instructions for each type of access flooring required; include manufacturer's maintenance instructions.

B. Submit shop drawings showing complete layout of access flooring based on field-verified dimensions; include dimensional relationships to adjoining work. Include full-size details, including descriptive notes, indicating materials, finishes, fasteners, typical and special edge conditions, accessories, understructure and other data to permit a full evaluation of engineer access flooring system.

C. Submit three samples of each exposed metal finish and each type color of floor covering.

   1. Submit one complete full-size floor panel, pedestal and grid unit for each type of access floor required.

D. Submit manufacturer's certification, including supporting laboratory test data that access flooring complies with indicated requirements.

E. Maintenance Stock: Deliver stock of maintenance material to Sandia. Furnish maintenance material matching products installed, packaged with protective covering for storage, and identified with appropriate labels.

   1. Standard Field Panels and Understructure: Furnish the following standard field panels and the understructure components.

      a. Standard Field Panels: 10 High Pressure Laminate and 6 carpeted.
      b. Perforated Air Panels: 5
      c. 4' Stringers: 10
      d. Pedestals: 10

PART 2 - PRODUCTS

2.01 MATERIALS AND FABRICATION

A. Standard Field Panels: Modular panels that are interchangeable with other standard field panels, easily placed and removed without disturbing adjacent panels or understructure by one person using a portable lifting device, and free of exposed metal edges in installed position with floor covering in place.

   1. Nominal Size: 24" x 24" unless otherwise indicated.

   2. Fabricate panels to required size plus or minus 0.005" with a squareness tolerance expressed as the difference between diagonal measurements from corner to corner of plus or minus 0.005" and with a flatness tolerance of plus

or minus 0.010" measured on diagonal on top and bottom of panel. Provide panels that are free of weld marks, ridges and other manufacturing imperfections.

3. Formed Steel Panels: Manufacturer's standard all-steel panel construction with die-cut flat top sheet welded to die-formed and stiffened bottom sheet.

    a. Protect metal surfaces against corrosion inside and out with manufacturer's factory-applied conductive epoxy paint applied in an immersion dip process.

B. Floor Covering: Finish tops of floor panels with floor covering materials indicated, laid flush to each panel edge and factory-bonded to bearing surface. Provide materials complying with colors and patterns indicated.

1. Plastic Laminate: High-pressure plastic laminate manufactured specifically for access flooring and complying with NEMA LD3, High-Wear Type, bonded in one piece for panel face without joints, and as follows:

    a. Grade HW 120 (0.120" thick)

2. Carpeting: Refer Section 09680.

    a. Carpet covered floor panels shall not have any plastic edging. Carpet shall be cut and laid flush to the edges of floor panels.

3. Plastic Edging: Extruded vinyl plastic edge trim applied mechanically or adhesively, or both, to perimeter of each panel, of size and profile to fit flush with top of high pressure laminate floor covering.

C. Pedestals: Provide manufacturer's standard pedestal assembly including base, column with provisions for height adjustment, and head (cap), made either of steel or aluminum or a combination of both.

1. Base: Square or circular base with not less than 16 sq. in. of bearing area.

2. Provide vibration-proof mechanism for making and holding fine adjustments in height for leveling purposes over a range of not less than 2". Include means of locking leveling mechanism at a selected height, which requires deliberate action to change height setting and prevents vibratory displacement.

3. Fabricate units of sufficient height to provide required under-floor clearance.

    a. Head: Of proper type for bolted grid system.

        (1) Provide conductive, sound-deadening pads or gaskets at contact points between heads and panels.

D. Grid Systems: Manufacturer's standard steel modular stringer system, designed and fabricated to interlock with pedestal head and to form a grid pattern with members under each edge of each floor panel and with a pedestal under each corner of each floor panel. Protect steel components against corrosion with manufacturer's standard galvanized finish.

1. Bolted Grid: System of main and cross stringers connected to pedestals with threaded fasteners accessible from above.

2. Provide continuous electrically conductive gasket at contact surfaces between panel and grid to deaden sound, to form an effective plenum seal, and where required, to maintain panel alignment and position.

2.02 ACCESSORIES

A. Floor Grilles: For carpeted installation provide manufacturer's standard load-bearing aluminum grille, isolated for metal-to-metal contact with panel, pedestal and grid. Reinforce floor panels if required to satisfy performance requirements.

B. Perforated Panels: Manufacturer's standard perforated air flow panel with resilient tile (high-pressure plastic laminate) floor covering and equivalent in strength to standard field panel.

1. Dampers: Manufacturer's standard air volume control dampers, isolated from metal-to-metal contact and adjustable from above through air outlet openings for both floor grilles and perforated panels.

C. Vertical Closures (Fascia): Where under-floor cavity is not enclosed by abutting walls, columns, beams, or downturned slabs, provide manufacturer's standard metal closure plates with factory-applied finish.

D. Panel Lifting Device: Manufacturer's standard portable lifting devices of the proper type for type of floor covering provided. Provide 3 for laminate panels and one for carpet.

E. Rubber Base: Refer to Specification Section 09650.

F. Perimeter Support: For recessed installations, provide manufacturer's standard aluminum extrusion to support panel edge and form transition between access flooring and adjoining floor covering at same level as access flooring.

PART 3 - EXECUTION

3.1 INSTALLATION

A. Install floor system and accessories under supervision of the manufacturer's authorized representative to ensure rigid, firm installation free of vibration, rocking, rattles, squeaks, and other unacceptable performance.

B. Lay out floor panel installation to keep the number of cut panels at the floor perimeter to a minimum. Scribe panel assemblies at perimeter to provide a close fit with no voids greater than 1/8" where panels abut vertical surfaces.

C. Locate each pedestal and complete any necessary subfloor preparation, and vacuum clean the subfloor of all dust, dirt and construction debris before starting installation. Set pedestals in adhesive and provide four anchor bolts to provide full bearing of the pedestal base on the subfloor. Perform minor subfloor grinding or filling to provide satisfactory bearing as part of this work.

   1. Pedestal assemblies shall be capable of resisting a 2,400 in-lb. overturning moment without failure of adhesive or anchor bolts or any part of pedestal.

D. Secure grid members to pedestal heads in accordance with manufacturer's instructions.

E. Accurately scribe and fit vertical closures to subfloor and adjacent finish floor. Set in mastic and seal if required for plenum effect.

F. Thoroughly vacuum clean the subfloor area as installation of floor panels proceeds. Extend cleaning under installed panels as far as possible. Repair any damage to epoxy painted floor slab.

G. Cutting and trimming or other dirt-or-debris-producing operations will not be permitted in the rooms where the floor is being installed.

H. Level installed access floor to within 0.10" of true level over the entire area and within 0.0625" in any 10' distance.

I. Provide positive electrical grounding of the entire access flooring system.

J. Edge panels that have been cut with manufacturer's standard trim member, wherever it is required to fit panels to perimeter or obstructions.

3.02 CLEANING, PROTECTION AND FINAL ADJUSTMENTS

A. After completion of installation, vacuum clean the entire floor system and cover with continuous sheets of reinforced paper or plastic. Maintain and repair damages to protective covering until directed to be removed by the Sandia Delegated Representative.

B. Replace access floor panels that are chipped, broken, stained, scratched, or otherwise damaged, or do not conform to specified requirements.

END OF SECTION

SECTION 11610

FUME HOODS

PART 1 GENERAL

1.01 RELATED DOCUMENTS

A. Drawings and general provisions of Contract, including General and Supplementary Conditions and Division I Specification sections, apply to work of this section as if repeated herein.

1.02 DESCRIPTION

A. Fume hoods and accessories.

B. Service Fixtures: Which are defined as natural gas, vacuum and other specified lab gas cocks, remote control valves, and vacuum breakers. Service fixtures include electrical conveniences outlet boxes, "C" type conduits. Duplex AC receptacles, switches, variable voltage units, and fluorescent tubes and vapor proof light fixture lamps.

1. Standard and *explosion-proof fixtures* are required.

C. Service lines: which are defined as natural gas, vacuum, and other specified lab gas piping, fittings, and shut-off valves necessary to carry respective services from Service Fixtures through equipment to building roughing-in outlets in floors or walls.

1. Service lines include all conduit, junction boxes, conduit fittings and wire necessary to carry electrical services from Service Fixtures through equipment to building roughing-in outlets in floors or walls.

D. Sprinkler Head: Hoods equal to or greater than 4 feet in the depth dimension shall be provided with a ½" orifice, pendent style, 155 degree F sprinkler head.

1.02 RELATED WORK

A. Section 09900: Painting

B. Section 12345: Laboratory Casework and Fixtures

C. Division 15: Mechanical

D. Division 16: Electrical

1.03 SUBMITTALS

A. Manufacturer's Data: Submit manufacturer's data and installation instructions for each type of fume hood.

B. Shop Drawings: Submit shop drawings for fume hoods showing plans, elevations, ends, cross-sections, service run spaces, locations and type of service fixtures with lines thereto; details and locations of anchorages and fitting to floors, walls, and base; layout of units with relation to surrounding walls, doors, window, lighting and air conditioning fixtures, and other building components; connection to hood exhaust system; location of access doors, cut-off valves, junction boxes.

1. Provide roughing-in drawings for mechanical and electrical services.

1.04 QUALITY ASSURANCE

A. General Performance: Design fume hoods so that, when connected to exhaust system that provides proper exhaust volume under normal laboratory condition, fume hoods will operate in a save efficient manner, within acceptable tolerances for face velocities specified. Dead air pockets and reverse air currents will not be permitted along surface of hood interiors.

B. Source Quality Control: SDR reserves the right to require manufacturer to demonstrate hood performance prior to shipment to prove compliance with contract requirements. Test hoods, testing facility, necessary instrumentation, apparatus and equipment will be supplied by manufacturer at no cost to Sandia. Test hoods to verify performance requirements, using smoke and air flow meters and in accordance with Section 6 of Scientific Apparatus Makers Association Standard LF-10.

Fume hoods shall comply with all requirements of NFPA 45, the UBC and the UMC.

1.05 DELIVERY, STORAGE AND HANDLING

A. Deliver units to project site in original, unopened packages and store them in a fully enclosed space where they will be protected against damage from moisture, direct sunlight, surface contamination or other causes. Coordinate delivery of fume hoods with other delivery of other laboratory furniture components. Protect finished surfaces from soiling and damage during handling and installation. Keep covered with polyethylene film or other protective covering.

B. Inspect upon delivery for damage. Minor damages may be repaired provided refinished items are equal in all respects to new work and acceptable to Sandia, otherwise, remove and replace damaged items as directed.

1.06 WARRANTY

A. The manufacturer shall guarantee all materials and workmanship provided for a period of 1 year from the date of the Notice of Acceptance. Any defects due to the use of improper material or workmanship on the part of the manufacturer occurring within that time shall be promptly rectified, by repair or replacement of the defective materials or correction of defective workmanship by manufacturer at his own expense, after notification by the Owner.

1.07 PERFORMANCE TEST

A. Performance tests shall be performed and witnessed by Sandia after installation.

B. Equipment List:

1. A properly calibrated hot wire thermal anemometer similar for equal to Alnor Model No. 8500D-1 Compuflow.

2. A supply of 1/2 minute smoke bombs.

3. A supply of titanium tetrachloride.

C. Test procedure, SMA LF10-1980: The following tests should be performed as listed:

1. Check room condition in front of the fume hood using a thermal anemometer and a smoke source to verify that the velocity of cross drafts does not exceed 20% of the specified average fume hood face velocity. Any cross drafts that exceed these values shall be eliminated before proceeding with fume hood test.

2. Determine specified average face velocity for fume hood being tested. Perform the following tests to determine if fume hood face velocities conform to specifications. With the sash in full open position, turn on the exhaust blower. The face velocity shall be determined by averaging the velocity of six readings taken at the fume hood face. Readings shall be taken at the center of the grid make up of three sections of equal area across the top half of the fume hood face and three sections of equal area across the bottom half of the fume hood face.

3. Check operation by moving sash through its full travel. Sash operation shall be smooth and easy. Vertical raising shall hold at any height without creeping up or down.

D. Air Flow in fume Hoods Without Auxiliary Air:

1. Turn fume hood exhaust blower on. With sash in the open position, check air flow into the fume hood using a cotton swab dipped in titanium tetrachloride or other smoke source. A complete traverse of the fume hood 6" inside the face should verify that air flow is into the fume hood over the entire face area. A reverse flow of air indicated unsafe fume hood operation. Advise all responsible individuals so that corrective action may be taken.

2. Move a lighted smoke bomb throughout the fume hood work area directing smoke across the work surface against the side walls and baffle. Smoke should be contained within the fume hood and be rapidly exhausted.

PART 2 PRODUCTS

2.01 ACCEPTABLE MANUFACTURES

A. Manufacturers: Hamilton, Kewaunee, or approved equal.

2.02 BASE CABINETS

A. All units shall be constructed of cold rolled steel and shall have a completely welded shell assembly. End panels and back shall be formed of one piece, wrap-around design, with front post channel and internal rear reinforcing posts. Front posts shall be fully closed and shall have full height reinforcing upright containing shelf adjustment holes and providing vertical rabbet for doors and drawers. Rear post shall contain shelf clip adjustment holes.

B. Standard Base Cabinet:

1. Solid door interior panels, fronts, scribing strips, filler panels, enclosures, drawer bodies, shelves, and security panels: 20 gage.

2. Cast tops, rear gussets, intermediate horizontal rails, leg rails, and stretchers: 16 gage.

3. Top rails, top rear gussets, intermediate horizontal rails, leg rails, and stretchers: 16 gage.

C. Solvent Storage Cabinets:

1. Metal cabinet fabricated in compliance with OSHA and NFPA 30. Fabricate bottom, top, sides and doors of 18 gage steel and with double wall construction with 1.5" air space between wall surfaces. Doors to be full height of cabinet opening and have self-closing mechanisms.

2. Form a liquid tight bottom with 2" high door sill.

3. Furnish with adjustable shelves, plugged or no vent ports.

4. Furnish with electrical grounding connection.

5. Furnish with warning signage on doors. Warning signage shall be white color on cabinet color.

D. Acid Storage Cabinets/Base Storage Cabinets:

1. Metal cabinet fabricated in compliance with OSHA and NFPA 30. Fabricate bottom, top, sides and doors of 18 gage steel.

2. Line entire cabinet including doors, sides, tops, bottoms and shelves with 0.125" thick calcium silicate liner mechanically attached to substrate. Doors to be full height of cabinet opening and have self-closing mechanisms.

3. Furnish with adjustable shelves, vent ports and vent assembly fume hood interior. Vent to be PVC pipe and extend to 4 inches above fume hood work surface behind baffles.

4. Furnish with electrical grounding connection.

5. Furnish with warning signage on doors. Warning signage shall be white color on cabinet color.

E. Hardware:

1. Swinging door catches shall be adjustable, spring actuated, nylon roller type. Magnetic catches or catches permitting rebound opening are not acceptable.

2. Hinges shall be institutional type, 2-1/2", 302 or 304 stainless steel, attached with sheet metal screws.

3. Elbow catch shall be spring type with strike.

4. Shelf supports required for all adjustable shelves shall be 13 gage angle, 1/2" wide, with 1/4" diameter x 3/8" long pin, bright zinc plated and all edges rounded.

5. Base molding 4" high, black rubber or vinyl, inside corners mitered, outside corners wrapped.

6. Pulls shall be extruded aluminum with clear anodized finish.

F. Finish:

1. All metal shall be spray cleaned with warm cleaner/phosphate solution, and pretreated with iron phosphate spray and chromic acid rinse prior to application of final finish. The strength of each solution shall be monitored by titration to insure consistent quality.

2. All treated parts shall be immediately dried in heated ovens and gradually cooled before application of the finish. Treated metal parts shall be clean and properly prepared to provide optimum adhesion of finish and resistance to corrosion.

3. Finish for metal equipment shall be a high-grade laboratory furniture quality, chemical resistant baked enamel of color selected from the manufacturer's standard colors, spray applied. Enamel shall be baked in a controlled high temperature continuous oven, assuring uniform curing to a smooth, hard satin finish.

4. All surfaces, exterior or interior, exposed to view, shall receive two coats of enamel and shall have a smooth satin luster. Refer to 2.05.

5. Backs of cabinets and other surfaces not exposed to view shall have one coat.

6. All drawer bodies to be finished in matching or harmonizing color.

7. Selected, concealed interior parts shall be finished in Lab Black.

2.03 FUME HOODS

A. Steel shall be high quality cold rolled mild steel and shall conform to ASTM Specification No. A366. All gages shall be U.S. Standard. Stainless steel shall be Type 304. All gages shall be U.S. Standard.

B. Safety glass shall be laminated type, 7/32" thick. *Tempered and laminated safety glass shall be provided where explosion-proof hood is indicated.*

C. Screws used to attach exterior structural members shall be sheet metal type, zinc plated. Interior fastening devices shall be truss head stainless steel screws. Exterior panel members shall be fastened by means of concealed devices. Exposed screws are not acceptable.

D. Sash cables shall be stainless steel, uncoated.

E. Sash guides shall be corrosion resistant polyvinyl chloride.

F. Ceiling closure panels shall be steel, finished to match hood exterior, 18 gage minimum.

G. Sash pull shall be corrosion resistant plastic, stainless steel or steel finished with a reagent resistant powder coat finish.

H. Bypass grills shall be low resistance type, 18 gage directionally louvered upward.

I. Pully assembly for sash cable shall be 1-1/2" diameter nylon tired, ball bearing type, with cable retaining device.

J. Finish shall be as directed for steel equipment.

K. Interior access panels must be gasketed with 70 durometer polyvinylchloride.

L. Construction and Design:

1. Fume hood superstructure shall be double wall construction consisting of an outer shell of sheet steel and an inner liner of corrosion resistant material as specified. Double wall shall house and conceal steel framing members, attaching brackets and remote operating service fixture mechanisms. Frame, inner shell and outer shall be assembled, fastened and connected into a rigid, self-supporting entity.

2. Wall thickness shall be 4-7/8" maximum, providing maximum interior work area. Access to fixture valves concealed between walls shall be provided by removable panels on hood exterior, gasketed access panels on the inside line walls, or through removable front posts.

3. A fluorescent light fixture shall be installed on exterior of roof. Hood roof shall have a safety glass panel sealed, cemented and caulked to isolate the light fixture from fumes and vapors. Fixture shall be the largest possible form fume hood size up to 48" on six foot superstructure, two lamp, rapid start, UL listed. Ballast shall be sound rated to limit noise level. Fixture interior shall be finished with a white, high reflected plastic enamel. Lamps shall be included. *Fixtures shall be explosion proof where an explosion proof hood is indicated.*

Two light fixtures, with separate switches on opposite sides of hood front face shall be provided at explosion proof hood.

4. Exhaust outlet shall be 18 gage steel finished with a 1.7 mil thickness #1399 black powder coat. Refer to mechanical specifications in Division 15 for exhaust beyond the hood outlet.

5. Fume hood sash shall be full view type providing a clear and unobstructed side view of fume hood interior and service fixture connections. Sash shall be laminated safety glass set into a deep form guide. Top and bottom sash rails shall be of 18 gauge steel finished with a powder coat reagent resistant baked enamel. Glass shall be set into rails with Neoprene or Polyvinyl Chloride glazing channel. Bottom rail shall have integral, formed, full width, flush pull. Top rail shall be formed to accept lead weights for fine tuning of sash for exact an positive operation. Counter balance systems shall be used to prevent sash tilting and permit one finger operation at any point along full width pull and to hold sash drop in the event of malfunction or failure of a cable. Standard hoods shall have a dual type postless sash. *Explosion hood shall have a five (5) panel combination type sash.* Hoods shall have movable safety shields.

6. Baffles shall provide controlled air vectors into and through the fume hood, and be fabricated of the same thickness materials as the liner. Exhaust slots shall be provided on the fill height vertical sides of the baffle with upper and lower slots adjustable. A fixed, permanently open horizontal slot located 17" above the work surface shall be provided. No less than a minimum of 19" of full height of interior work space is acceptable at the extreme upper portion of the fume hood to provide maximum interior work area. For safety, fume hood shall maintain essentially constant exhaust volume at any baffle position. Changes in average face velocity and exhaust volume as a result of baffle adjustment shall not exceed 5% for any baffle position at the specified face velocity.

7. Baffle adjustment shall permit setting for (1) high thermal loading, (2) heavier than air gasses or fumes generated near the work surface, and (3) normal or average operation. Adjustments shall be instantaneous, one handed, with a single point control, accomplished while hood is in use, without disturbing apparatus. For safety, hood shall maintain essentially a constant exhaust volume at any baffle position. Changes in average face velocity and exhaust volumes as a result of baffle adjustment shall not exceed 5% for any baffle position at the specified face velocity. An acid resistant label indicating proper baffle operating shall be located next to the internal adjustment knob. Baffle designs which permit closeoff of all slots or which require insertion of more than the operator's hand and arm for adjustment, are not acceptable. Non-adjustable baffles are not acceptable.

8. Service fixtures and fittings, mounted inside of fume hood shall consist of color coded hose nozzle outlets and valves controlled from exterior equipped with color coded index handles. Valves shall be needle point type with self-centering cone tip and seat of hardened stainless steel. Tip and seat shall be removable and replaceable. All service fixtures shall be provided with piping, from valve to outlet, using copper for water, and 316 stainless steel for gas and vacuum services. Fixture components exposed to hood interior control handle shall be constructed of black polycarbonate. Services shall be as shown or specified.

9. Electrical services shall be of three wire grounding type receptacles rated at 120 VAC at 20 amperes. Flush plates shall be stainless steel. *Electrical receptacles shall be rated for explosion-resistant use, where an explosion proof hood is indicated.*

10. Work surface shall be dished a nominal 1/2" to contain spills. Standard hoods shall have an epoxy resin top *with flush mounted cup sink*. Explosion-proof hood shall have a stainless steel work surface and shall be provided with an integral, flush mounted, welded, stainless steel cup sink. *Cup sink drains shall extend down into base cabinets and terminate with a plumbing valve, provided by others. Refer to Mechanical Specifications.*

11. Fume hoods shall be equipped with a low air flow Monitor/Alarm System. The alarm assembly shall consist of an Underwriter's Laboratory listed enclosure box, complete with all internal wiring and electrical components, a pressure differential switch, UL listed, a sensor and connecting plastic tubing. External wiring, conduit and final permanent connections shall be by others. System shall be factory preset to signal conditions when fume hood average face velocity and exhaust volume drops 70% of that specified.

2.04 FUME HOOD SERVICE FITTINGS

A. Fume hoods shall be pre-piped and pre-wired to a single point of connection at top of hood.

B. Electrical fixtures and fittings shall be flush, and shall be in strict accordance with the current edition of the National Electrical Code of the National Fire Protection Association and with all local codes, ordinances and building codes having jurisdiction.

1. Receptacles shall be rated at 120 volts AC at 20 amperes, NEMA-5-20R, and shall be three wire grounding type with "Ground Fault Interrupters".

2. Receptacles shall have ivory or brown colored, molded thermoset bodies, and shall be either single or duplex as required.

3. Switches shall be single pole, toggle type.

4. Flush boxes shall be of galvanized steel.

5. Flush plates shall be nylon or plastic.

6. All flush boxes, receptacles, and flush plates must be grounded.

7. All electrical services to be explosion proof where an explosion proof hood is specified.

2.05 METAL PAINT FINISH:

A. Pressure clean metal at elevated temperatures and treat with microcrystalline, zinc phosphate coating.

B. After fabrication of component parts, perform 3 stage treatment of cleaner/phosphate spray, water rinse, and chromic acid rinse. Dry all treated parts in heated ovens and allow to gradually cool before finish application. Electrostatically apply high grade laboratory furniture quality, chemically resistant baked powder coat finish. Finish coat to meet or exceed "performance Requirements and Evaluation Procedures for Metal Laboratory Procedures", SAMA Standard.

C. Fume hoods shall be finished in standard manufacturer’s color; gray/charcoal.

PART 3 EXECUTION

3.01 INSTALLATION:

A. Install fume hoods plumb, level, rigid, securely anchored to building and adjacent furniture in proper location, in accordance with manufacturer's instructions and the accepted shop drawings. Install closures neatly. Securely attach access panels but provide for easy removal and secure re-attachment.

B. Coordinate sequence of work with Division 15 - Mechanical, Division 16 - Electrical and Division 12 - Furnishings.

3.02 FIELD QUALITY CONTROL:

A. Field Test:

Field test each unit after completion of installation to verify proper operation of hoods in accordance with specified requirements. Perform field tests in accordance with Section 7 of Scientific Apparatus Makers Association Standard LF-10. Submit field test results to the SDR.

3.03 ADJUST AND CLEAN:

A. Moving Parts: Carefully check and adjust moving parts to insure smooth, near-silent, and accurate sash operation with one hand and with uniform contact of rubber bumpers; ensure counterbalances operate without interference.

B. Clean surfaces, including both sides of glass.

C. Damaged Work: Repair equal to new undamaged work, or replace with new units, as acceptable to the SDR.

END OF SECTION

SECTION 12610

MODULAR FURNITURE SYSTEMS

PART 1 GENERAL

1.01 DESCRIPTION

A. Furnish all labor, materials, tools, and perform all operations necessary for the installation of complete and operable modular furniture systems as shown on the contract drawings and as specified herein, including that which is reasonably inferred. Documents do not undertake to show or list every item to be provided. When items not shown are required for proper operation of the system or required by code, such items shall be provided at no increase in contract price.

1.02 DRAWINGS AND COORDINATION WITH OTHER WORK

A. Drawings:

1. Shop drawings from the modular furniture system supplier will be furnished to the Contractor upon request. These drawings will be available some time after the modular furniture purchase order is placed by Sandia.

B. Coordination

1. The drawings shall be followed explicitly for the placement and installation of all modular furniture systems. However, this does not relieve the Contractor in any way from properly coordinating the installation effort between the trades. Any and all problems caused by inadequate coordination or planning shall be corrected at the expense of the Contractor to the satisfaction of the SDR.

2. Work out all "tight" conditions involving work under this Division and work in other Divisions in advance of installation. Provide supplementary drawings and additional work necessary to overcome "tight" conditions.

3. Provide templates, information, and instructions to other Divisions to properly locate holes and openings to be cut or provided for electrical work.

PART 2 PRODUCTS

2.01 MATERIALS

A. All modular furniture systems installed under this Division shall be Sandia furnished Contractor installed.

B. It is the Contractor's responsibility to transport, take possession, store, unpack, inspect, inventory, coordinate, stage, set, assemble, and install all modular furniture systems furnished by Sandia. The Contractor is responsible for all damage sustained after furnishment by Sandia, and the burden of proof of damage prior to furnishment lies with the Contractor. Equipment or materials damaged by the Contractor shall be considered totally damaged and unacceptable. Replace with new. Variance from this is only permitted by written permission from the SDR.

PART 3 EXECUTION

3.01 GENERAL

A. Follow manufacturer's directions covering points not specified or shown.

B. Accurately set and level with supports neatly placed and properly fastened. Properly fasten equipment in place to prevent movement. Comply with seismic restraint requirements. All supports and fastening hardware shall be furnished and installed by the Contractor.

C. Provide an authorized representative from the manufacturer to constantly supervise the work of this Division .

3.02 QUALIFICATIONS

A. Prior to the start of work, the Contractor shall submit to the SDR for approval, the qualifications of the firm which will be performing installation of the modular furniture systems. This shall also include a certificate of qualification for each person who will be assigned to perform this work. Minimum qualifications include training certification for modular furniture installations by Haworth Inc. and at least five (5) years of experience in the installation and inspection of modular furniture systems. The qualifications listed shall cover, as a minimum, the individual's name, background of related special training in the trade, number of years of experience, and references from jobs performed in the last two years.

3.03 DELIVERY, HANDLING, INSPECTION, AND CLEAN-UP

A. The Contractor shall send a written request to the SDR at least four (4) months prior to the desired receipt of all Sandia furnished modular furniture systems. This request shall state a one (1) month window in which all furniture is to be furnished by Sandia.

B. The Contractor shall take possession of all modular furniture systems within one (1) week after receipt by Sandia. Sandia has no storage space available for use by the Contractor. All modular furniture systems shall be transported by the Contractor from Sandia Shipping & Receiving to the job site.

C. It is the Contractor's responsibility to report to the SDR in writing any and all discrepencies between the Contract Documents (including supplier supplied shop drawings and material lists) and items furnished by Sandia. Lack of proper inspection and inventory by the Contractor after receipt of Sandia furnished materials shall be considered improper coordination if not performed in a timely manner so as to not impact the project schedule.

D. All packing materials and debris shall be disposed of by the Contractor.

3.04 CLEANING, PAINTING & TIGHTENING

A. All modular furniture shall be wiped down thoroughly including, but not limited to, worksurfaces, shelves, inside of flippers, pedestals, and raceways. All excess tags and strings shall be removed. Upholstery shall be brushed down as needed. The site shall be vacuumed. All overheads shall be functioning correctly. All wires and cables shall be tucked into wire management apparatus as permitted. All drawers and locks shall be functioning smoothly.

B. Provide touch-up services as required. Repair damaged and defective work to eliminate defects functionally and visually. For touch-up paint, materials and colors shall be purchased from the factory.

C. Tighten nuts, bolts, connections, etc. to the manufacturer's specifications.

3.05 INSPECTION

A. Final acceptance shall require inspection and acceptance by the Contractor, the authorized representative from the manufacturer, and the SDR.

END OF SECTION

SECTION 13122

CHEMICAL STORAGE SHEDS

PART 1 GENERAL

1.01 RELATED DOCUMENTS

A. Drawings and general provisions of Contract, including General and Supplementary Conditions and Division I Specification sections, apply to work of this section as if repeated herein.

1.02 DESCRIPTION

A. Work included in this section is design, materials, equipment, fabrication, installation, and tests for a completely operable chemical storage shed in accordance with this specification.

B. Related work in other sections:

1. Interfacing of waterflow devices, Division 15.

2. Interfacing of supervisory devices, Division 15.

3. Interfacing of the fire alarm system annunciation devices, Division 16.

4. Electrical Interface, Division 16.

1.03 SUBMITTALS

A. Submit product data, shop drawings including dimensions and required clearances, and installation instructions.

1.04 QUALITY ASSURANCE

A. Chemical storage shed. The design and construction of the shed shall meet all applicable local, state, and federal regulations.

B. Current edition of the following publications of the issues listed below form a part of this specification:

1. FM - Factory Mutual Approval Guide

2. NFPA - National Fire Protection Association (NFPA 13, 17, 30, 70, & 72).

3. UL - Underwriters Laboratories Equipment Directory

4. Uniform Building Code (UBC)

5. Uniform Fire Code (UFC)

1.05 SYSTEM PERFORMANCE AND OPERATION

A. Storage shed shall be a noncombustible relocatable structure standing *[ ] ft wide x [ ]ft long x [ ]ft high outside and [ ] ft wide x [ ] ft long x [ ] ft tall inside.* The structure shall be equipped with a fixed dry chemical fire suppression system and a sprinkler system.

Edit Note: Normally the sprinkler system, if purchased, is kept dry and not connected to the water supply, and paragraph C below is not required. If the sprinkler system is to be connected to the water supply system and charged with water, paragraph C shall be included in the specification.

B. Activation of the dry chemical system shall:

1. Activate audible/visual alarm at the storage shed.

2. Operate Form "C" relay for connection to the Site Fire Alarm System.

3. Units provided with a fire system control panel shall be provided with outputs for trouble conditions.

4. Units provided with out a fire system control panel shall be provided with a form "C" relay to allow for loss of power monitoring.

C. Activation of the sprinkler system or valve supervisory device by others shall:

1. Upon water flow, operate Form "C" contacts via waterflow switch for connection to the Site Fire Alarm System by others.

2. Upon control valve closing, operate Form "C" contacts via valve supervisory switch for connection to the Site Fire Alarm System by others.

PART 2 PRODUCTS

2.01 MANUFACTURERS

A. Manufacturer: Safety Storage Inc, or approved equal.

2.02 CHEMICAL STORAGE SHED

A. Chemical Storage Shed:

1. The storage shed shall be UL listed or Factory Mutual approved for the intended service. Parts and components shall be either UL-listed and/or FM approved.

2. The storage shed shall be relocatable using lift trucks and must have anchoring provisions.

3. Electrical wiring and equipment shall be suitable for Class I, Division I hazardous (classified) locations.

4. Exterior walls and roof of the shed shall have a 2-hour fire rating with all openings in the walls having equivalent protection.

5. All surfaces shall have corrosion resistant protection.

6. Minimum roof construction shall be twelve gauge sheet steel welded to ten gauge steel purloins on 30-inch centers.

7. Doors. The shed shall contain *[ ]* exterior doors. Doors shall be equipped with a self door closer, security lock, and interior safety release latch. Door openings shall be a minimum of 4 feet in width to allow pallet loading. Door height shall be a minimum of 6 ft - 7 inches. The doors shall have a fire rating of *[3]* hours.

   Edit Note: Security lock on doors must meet security keying requirements.

8. The shed shall have a secondary spill containment system. The shed shall have sufficient capacity to contain 25 percent of the container allowed or the largest container, whichever is greater. The containment sump shall be ten gauge sheet steel continuously welded to the perimeter walls. The sump shall be equipped with an overflow pipe and cap and a chemical resistant liner.

9. *Interior floor grating shall be non-sparking, noncombustible and corrosion resistant with a minimum open area of 35 percent. The grating should be small enough such that 1-inch diameter wheels will not be caught or inhibited. The flooring shall be epoxy coated plywood. The load bearing capacity shall be a minimum of 250 pounds per square foot.*

10. Provide a static grounding system *with [interior grounding lugs] [interior two-foot (2') long copper-clad steel grounding boxes],* exterior static grounding connection and one (1) eight-foot (8') long copper-clad steel ground rod.

11. Provide fixed or adjustable steel storage shelves with 1-inch containment lip.

12. *Provide [ ] 2-hour fire rated interior compartment wall(s) for separation of incompatible materials.*

13. Provide hazard signage. Signs shall be a metal flip placard type with rust-proof aluminum holder and stainless steel clips. Provide warning signs of a durable, weather resistant material.

14. Provide *one (1) [60 amp] [125 amp]* NEMA 3R Load Center with *[one (1)] [two (2)] [single pole 120V, 20 amp] [double-pole 208V, 20 amp]* circuit breakers.

15. Provide explosion relief construction to resist a minimum internal pressure of 100 psf. Provide relief vent panels on the rear wall designed to release at a maximum internal pressure of 20 psf. The vent area shall be 1 sq. ft. per 50 cubic ft. of interior volume. Each pressure relief panel shall be weather-stripped and safety chained to the rear wall. The vent openings shall be equipped with security bars.

16. Provide a motorized ventilation system with UL listed Class I, Division I, Groups C and D, totally enclosed explosion-proof motor.

17. *Provide a Class I, Division I, Groups C and D, explosion-proof, single phase air conditioner with adjustable temperature setting from 65 to 100 °F.*

18. Provide interior lighting consisting of UL listed Class I, Division I, Groups C and D, explosion proof incandescent lighting fixtures with 150W lamp (120V, 1.25A, single phase) and one exterior Class I, Division I, Groups C and D, explosion-proof light switch (NEMA enclosure type 7.3).

19. Provide portable access ramp with a minimum 8 to 1 ratio run to rise. Ramp shall be made of diamond plate steel and painted “safety yellow.”

20. Provide an emergency shower and eyewash station for exterior use that can be connected to site water supply, or provide self-contained type unit for remote locations.

2.03 ENVIRONMENTAL REQUIREMENTS

1. R-11 insulation in walls and ceiling.

2. Air conditioning and heating systems must have:

   a. Heating - inside temperature control requirements of 70-85°

b. Cooling - inside temperature control requirements of 70-85°F.

3. Temperature control requirements must meet those needed for Livermore, CA. weather:

   a. Summer design (2.5%) with a 97° dry bulb, 68° wet bulb.

   b. Winter design (97.5%) 27°F.

   c. Mean daily range of 24°F.

2.04 FIRE SUPPRESSION SYSTEM

1. Provide a UL listed and/or FM approved pre-engineered dry chemical fire suppression system with exterior audible alarm, remote contacts, fusible links for automatic fire detection and activation, interior manual activation, and exterior remote pull station for manual activation. Sheds that are separated into two or more internal compartments, shall be provided with a separate, complete dry chemical fire suppression system for each compartment.

2. Provide a sprinkler system with an outside water supply connection (FDC). All materials and devices shall be UL listed and/or FM approved. Sprinklers shall have a minimum temperature rating of 212°F and be lead coated or of the corrosion-proof type.

   Edit Note: Depending on the location of the storage shed, the sprinkler system may be required to be connected to a permanent water supply and be equipped with alarm indicating devices. Contact Fire Protection Engineering prior to finalizing the specification.

PART 3 EXECUTION

3.01 FIELD TESTS

A. Following complete installation, the supplier shall:

   1. Operate all parts of the dry chemical *[and sprinkler]* system, including backup capabilities.

2. Test all devices for specified operation.

3. Test control panel for proper operation.

B. Final Acceptance:

1. Final acceptance shall require an inspection, complete functional and operational tests of all equipment and systems in the presence of the SDR and Site Fire Marshal.

2. At this time any and all required tests shall take place, and any defects corrected until the system is found to be acceptable to the SDR and the Site Fire Marshal. Furnish all instruments, labor, and materials required for the tests. Submit complete test reports to the SDR within 5 working days after acceptance.

3. Provide a contractor's Material and Test Certificate as described in NFPA 13 "Standard for the Installation of Sprinkler Systems.

4. All interior sprinkler piping shall be hydrostatically tested at the working pressure plus 50 psi or 200 psi (whichever is greater) for 2 hours. No leakage (as shown by a drop in gauge pressure or visible leakage) is allowed. Hydrostatic pressure test of the sprinkler system shall be completed by the manufacturer prior to delivery of the shed.

END OF SECTION

SECTION 15010

BASIC MECHANICAL REQUIREMENTS

PART 1 GENERAL

1.01 RELATED DOCUMENTS

A. Drawings and general provisions of Contract, including General and Supplementary Conditions and Division I Specification sections, apply to work of this section as if repeated herein.

1.02 DESCRIPTION

A. This Section specifies the basic requirements for mechanical installations and includes requirements common to more than one section of Division 15. It expands and supplements the requirements specified in sections of Division 1.

B. The work included under Division 15 of the specifications shall include complete mechanical systems as shown on the drawings and as specified herein. Provide all supervision, labor, material, equipment, machinery, and other items necessary to complete the mechanical systems.

1.03 SEISMIC PROTECTION

A. This project is located in Seismic Zone 4.

B. Division 15, Section 15200 "SEISMIC PROTECTION FOR MECHANICAL SYSTEMS" applies to all piping systems, ductwork systems, and equipment.

1.04 INTENT

A. It is the intention of these specifications and drawings to call for finished work, tested, and ready for use and operation by Sandia. Wherever the word "provide" is used, it shall mean "furnish and install complete, tested and ready for use."

B. Minor details not usually shown or specified, but necessary for the proper installation and operation, shall be included in the work, the same as if herein specified or shown. When an item is necessary for the operation of equipment or system drawn or specified, provide a suitable item at no increase in contract price, which will allow the system to function properly.

C. For purposes of these specifications where ever the term SDR is used it shall mean "Sandia Delegated Representative".

1.05 DRAWINGS

A. The drawings and specifications cover the extent and general arrangement of the various systems, subject to the individual characteristics of the mechanical equipment with regard to size and arrangement. The mechanical drawings are diagrammatical and are not intended to include all of the details or dimensions shown on the architectural, electrical, civil or structural drawings. Where dimensions are noted, the drawings shall be accurately followed. Exceptions to or conflicts between the drawings and specifications shall be submitted in writing to Sandia at least 7 days before bidding date.

1.06 NOISE AND VIBRATION

A. Mechanical equipment and devices shall operate without objectionable noise and vibration being transmitted to occupied portions of the building or any part of the building structure by apparatus, piping, ductwork, conduits, or other parts of the mechanical work.

B. Air distribution devices, fans, thermostats and other such equipment that may produce sound or vibration either outside or within the occupied space of the building shall, as a minimum requirement, conform to the installation details and recommendations in Chapter 35 of the ASHRAE Handbook, HVAC Systems and Applications, Current Edition, Contractor shall also comply with the recommendations of chapter 39 of the ASHRAE Handbook, HVAC applications, construction phase & training of operating personnel, as directed by the SDR.

1.07 LEAK DAMAGE

A. Contractor shall be responsible for damage caused by leaks in any of the equipment or material installed by him through equipment or material failures or disconnected pipes or fittings, and shall make, at his own expense, all repairs or replacement required as a result of such damage.

PART 2 PRODUCTS

2.01 SOURCE OF MATERIALS AND EQUIPMENT

A. Manufactured articles, material, and equipment shall be of domestic manufacture, i.e., manufactured in the United States of America, unless indicated otherwise. Refer to provisions in standard terms and conditions.

2.02 SUBSTITUTIONS

A. Substitutions: Refer to Division I, Section 01300 "DESCRIPTIVE SUBMITTALS".

2.03 DELIVERY, STORAGE, AND HANDLING

A. Deliver products to project properly identified with names, model numbers, types, grades, compliance labels, and similar information needed for distinct identifications; adequately packaged and protected to prevent damage during shipment, storage, and handling.

B. Store equipment and materials at the site, unless off-site storage is SECURED FROM SDR in writing. Protect stored equipment and materials from damage.

C. Coordinate deliveries of mechanical materials and equipment to minimize construction site congestion. Limit each shipment of materials and equipment to the items and quantities needed for the smooth and efficient flow of installations.

D. Contractor shall be responsible for the equipment included in this contract until it has been finally inspected, tested, and accepted in accordance with these specifications.

2.04 COMPATIBILITY OF EQUIPMENT

A. The Contractor shall assume full responsibility for satisfactory operation of all component parts of the mechanical systems to assure compatibility of all equipment and performance of the integrated systems in accordance with requirements of the specifications. Should the Contractor consider any part of the specifications or drawings as rendering his acceptance of such responsibility impossible, prohibitive, or restrictive, he shall so notify Sandia seven days before submitting his bid, and the bid shall be accompanied by a written statement of any objections or exception to the specifications and drawings.

2.05 RECORD DOCUMENTS

A. Refer to the Division-1 Section 01720, "PROJECT RECORD DOCUMENTS" for requirements. The following paragraph supplements the requirements of Division 1.

B. During the progress of the work, the Contractor shall maintain in his field office one (1) set of drawings and specifications which shall be reserved exclusively for the orderly and legible recording of changes in the work. Changes shall be red lined on blue line prints. This set shall remain in the office at all times and shall not be used for construction reference. Sandia Delegated Representative shall be given access to this set during the progress of the work and at the completion of the work and before final payment, shall take possession of the set.

2.06 MECHANICAL SUBMITTALS, SHOP DRAWINGS AND SAMPLES

A. Refer to the Conditions of the Contract (General and Supplementary) and Division 1 Section 01300 "DESCRIPTIVE SUBMITTALS" for submittal definitions, requirements, and procedures.

B. Furnish samples of materials when requested by the Sandia Delegated Representative for examination by the Sandia Delegated Representative prior to acceptance of submittals.

C. Submittal Stamping: The intent of the submittals is to help the Contractor avoid mistakes in the purchase of equipment, to advise him of the related equipment that might be affected by substitutions and to help avoid purchases of equipment that is not equal to the specified equipment. The Sandia Delegated Representative stamping of such submittals shall not relieve the Contractor of the responsibility for proper performance of all equipment or deviations from the drawings or the specifications.

2.07 SPECIAL TOOLS

A. For each type of equipment to be furnished by the contractor, the contractor shall provide a complete set of all special tools (including grease guns or other lubricating devices) which may be necessary for the adjustment, operation, and maintenance of such equipment.

2.08 PROTECTION AGAINST ELECTROLYSIS

A. Where dissimilar metals are used in conjunction with each other, suitable insulation shall be provided between adjacent surfaces so as to eliminate direct contact and any resultant electrolysis. Connections of dissimilar piping materials shall utilize dielectric unions, flanges, couplings, or bushings.

2.09 NOISE AND VIBRATION

A. Mechanical and electrical equipment, as installed, shall not create sound levels that are in excess of that permitted by OSHA for 8 hours per day worker exposure unless otherwise noted for the specific piece of equipment involved. If the required sound level cannot be achieved by bare equipment in its designated environment, sound attenuating enclosures shall be provided. Sound attenuating enclosures shall have easy removal to permit maintenance. Devices necessary for day-to-day operation shall pierce the enclosure or otherwise be accessible without need to remove the enclosure.

PART 3 EXECUTION

3.01 TRENCHING, BACKFILLING AND COMPACTING

A. Refer Division 2 “SITEWORK”.

3.02 LAYING OUT OF THE WORK

A. Lay out work on the premises and make proper provision for the other work. The exact location of each item shall be determined by reference to the general plans, by measurements at the building and in cooperation with other contractors. The Contractor shall be responsible for accurately locating all openings for ducts, pipes, etc., and access doors required.

3.03 COORDINATION

A. Interferences with the structural conditions shall be corrected before the work proceeds.

B. The mechanical and electrical portions of the work shall have precedence over one another in accordance with the following sequence.

1. Soil and waste piping

2. Pitched water piping

3. Ductwork

4. Sprinkler piping

5. Electrical bus duct and cable trays

6. Gas

7. Electrical wiring

C. Obtain approval from Sandia Delegated Representative(SDR) to coordinate the shut-down of any existing system for connections, etc.

D. Advance notice of 48 hours shall be given to the SDR prior to the proposed shut-down of any system and shall be on Impairment Permit obtained from Sandia.

E. The closing and opening of valves may be witnessed by SDR. Notify the SDR prior to closing and opening of valves.

F. The entire existing fire protection system shall be restored to full operation at the end of each working day. If this is not possible, comply with Authority having jurisdiction requirements for alternative fire protection.

G. Provide adequate fire protection during the entire construction period.

H. Mechanical contractor shall be responsible for complete and operable control systems, including electrical wiring to control devices.

3.04 NAMEPLATE DATA

A. Provide permanent operational data nameplate on each item of power operated mechanical equipment, indicating manufacturer, product name, model number, serial number, capacity, operating and power characteristics, labels of tested compliance's, and similar essential data. Locate nameplates in an accessible location.

3.05 OPERATION AND MAINTENANCE DATA

A. Refer to the Division 1 Section 01300, "DESCRIPTIVE SUBMITTALS" for procedures and requirements for preparation and submittal of maintenance manuals. In addition to the information required by Division 1 for operation and maintenance data, comply with the following requirements:

1. Operating and maintenance manuals: When the installations are completed and before final acceptance or payment is made, prepare and deliver to the Sandia Delegated Representative three (3) bound copies of a manual consisting of the following:

a. Complete and corrected submittals conforming to the as-built status of the project.

b. Description of function, normal operating characteristics and limitations, performance curves, engineering data and tests, and complete nomenclature and commercial numbers of all replaceable parts.

c. Manufacturer's printed operating procedures to include start-up, break-in, routine and normal operating instructions; regulation, control, stopping, shut-down, and emergency instructions; and summer and winter operating instructions.

d. Maintenance procedures for routine preventative maintenance and troubleshooting; disassembly, repair, and reassembly; aligning and adjusting instructions.

e. Valve charts.

f. Lubrication time schedule for all equipment with schedule of lubricants to be used.

g. Belt sizes, types, lengths, and belt number.

h. Revised wiring and control diagrams.

i. Motor and starter schedule as specified in paragraph 3.6B of this section.

j. Manufacturer's guarantees or warranties and factory test data.

2. Refer to Section 15970, "CONTROLS" for special requirements of instructions of Sandia's operating personnel, furnishing of instructional material and requirements for operation and maintenance manuals.

3. All data shall be bound in permanent binders and arranged so that operation, maintenance guarantees, and warranties bulletins are adjacent to the original submittal data for each respective piece of equipment.

4. The manuals shall be clearly indexed.

5. The Contractor shall furnish three (3) sets of record drawings with the operating manuals.

6. Provide 8 hours minimum of operating instruction and training to Sandia's operating personnel.

7. Personal written guarantee against faulty workmanship and material good for one year from date of acceptance by Sandia.

8. Testing, adjusting, and balancing reports.

B. Electric Motor Schedule:

1. Before final inspection of the project, submit to the Sandia Delegated Representative a schedule listing each motor supplied under Division 15. Include the following information for each motor:

Location room number, area, etc.
Description of motor duty. Air unit fan motor, refrigeration compressor motor, chilled water pump motor, for examples.
Type of coupling. Direct drive, V-belt, flexible coupling, etc., belt specification.
Motor manufacturer's name and serial number of motor.
Motor rated horsepower.
Motor speed, rpm.
Motor nameplate ratings, voltage, number of phases, temperature rise.
Nameplate amperage at connected voltage.
Starter and heater manufacturer, size and rating.
Type of motor bearing and lubrication instructions.
Driven load bearing type and lubrication instructions.
Catalog information for starters as follows:
Manufacturer's name and catalog number.
Rating.

3.06 ROUGH-IN

A Verify final locations for rough-ins with field measurements and with the requirements of the actual equipment to be connected. Refer to equipment specifications in Divisions 2 through 16 for rough-in requirements.

3.07 MECHANICAL INSTALLATIONS:

A. Coordinate mechanical equipment and materials installation with other building components.

B. Verify all dimensions by field measurements.

C. Arrange for chases, slots, and openings in other building components to allow for mechanical installations.

D. Coordinate the installation of required supporting devices and sleeves to be set in poured in place concrete and other structural components, as they are constructed.

E. Sequence, coordinate, and integrate installations of mechanical materials and equipment for efficient flow of the Work. Give particular attention to large equipment requiring positioning prior to closing-in the building.

F. Coordinate the cutting and patching of building components to accommodate the installation of mechanical equipment and materials.

G. Where mounting heights are not detailed or dimensioned, install mechanical services and overhead equipment to provide the maximum headroom possible.

3.08 ACCESSIBILITY

A. Install equipment and materials to provide required access for servicing and maintenance. Coordinate the final location of concealed equipment and devices requiring access with final location of required access panels and doors. Allow ample space for removal of all parts that require replacement or servicing.

B. Extend all grease fittings to an accessible location.

C. Refer to the Division 8 Section 08305: "ACCESS DOORS."

3.09 CUTTING AND PATCHING

A. General: Perform cutting and patching in accordance with the following requirements:

1. Protection of Installed Work: During cutting and patching operations, protect adjacent installations.

2. Perform cutting, fitting, and patching of mechanical equipment and materials required to:

a. Uncover Work to provide for installation of ill-timed Work.

b. Remove and replace defective Work.

c. Remove and replace Work not conforming to requirements of the Contract Documents.

d. Remove samples of installed Work as specified for testing.

e. Install equipment and materials in existing structures.

f. Upon written instructions from the SDR, uncover and restore Work to provide for SDR observation of concealed Work.

3. Cut, remove and legally dispose of selected mechanical equipment, components, and materials as indicated, including but not limited to removal of mechanical piping, duct work, heating units, plumbing fixtures and trim, and other mechanical items made obsolete by the new Work.

4. Protect the structure, furnishings, finishes, and adjacent materials not indicated or scheduled to be removed.

5. Provide and maintain temporary partitions or dust barriers adequate to prevent the spread of dust and dirt to adjacent areas.

   a. Patch existing finished surfaces and building components using new materials matching existing materials and experienced Installers. Installers' qualifications refer to the materials and methods required for the surface and building components being patched.

   b. Patch finished surfaces and building components using new materials specified for the original installation and experienced Installers. Installers' qualifications refer to the materials and methods required for the surface and building components being patched.

6. All torch cutting shall have a Sandia Burn Permit issued by Sandia Fire Protection prior to starting.

3.10 WARRANTIES

A. Refer to individual equipment specifications for warranty requirements.

B. Compile and assemble the warranties specified in Division 15, into a separated set of vinyl covered, three ring binders, tabulated and indexed for easy reference.

C. Provide complete warranty information for each item to include product or equipment to include date of beginning of warranty or bond; duration of warranty or bond; and names, addresses, and telephone numbers and procedures for filing a claim and obtaining warranty services.

3.11 CLEANING

A. Refer to the Division 1 Section 15050: "BASIC MECHANICAL MATERIALS AND METHODS" for general requirements for final cleaning.

B. Refer to Division 15 Section 15990: "TESTING, ADJUSTING, AND BALANCING" for requirements for cleaning filters, strainers, and mechanical systems prior to final acceptance.

C Clean equipment and restore to new condition.

D. Touch up paint finish damage.

E. When paint damage is extensive, as determined by Sandia Delegated Representative, repaint completely with paint equal to original finish.

F. Exposed metal that is not painted, that has rusted shall be brushed down with steel brush to remove rust and other spots and left smooth and clean.

END OF SECTION

SECTION 15030

ELECTRICAL REQUIREMENTS FOR MECHANICAL EQUIPMENT

PART 1 GENERAL

1.01 RELATED DOCUMENTS

A. Drawings and general provisions of Contract, including General and Supplementary Conditions and Division I Specification sections, apply to work of this section as if repeated herein.

1.02 DESCRIPTION

A. This section specifies the basic requirements for electrical components to be supplied under Division 15. Components may be supplied as an integral part of packaged equipment, or supplied for separate mounting.

B. Components shall be in accordance with equipment specification requirements, and shall be in accordance with the electrical requirements for such equipment as contained in Division 16, of these specifications.

C. These components include, but are not limited to, motors, starters, control devices, and disconnect switches furnished as part of mechanical equipment.

D. Specific electrical requirements (i.e. horsepower and electrical characteristics) for mechanical equipment are specified within the individual equipment specification sections or on schedules on the drawings.

E. Where unitized equipment is specifically permitted by the drawings or specifications, some of the electrical restrictions of these specifications may be waived and the standard design of the manufacturer will be considered, provided such standard design complies with the minimum requirements of the National Electrical Code. Each such case will be individually reviewed by the Sandia Delegated Representative and decided on the merits of each case.

F. Motor starters, contactors or other items of electrical control equipment shall be provided with the proper quantity of auxiliary contacts necessary for the control and interlocks shown.

1.03 REFERENCES

A. NEMA Standards MG 1: Motors and Generators.

B. NEMA Standards ICS 2: Industrial Control Devices, Controllers and Assemblies.

C. NEMA Standard 250: Enclosures for Electrical Equipment.

D. NEMA Standard KS 1: Enclosed Switches.

E. NFPA Standard 70: National Electric Code.

1.04 SUBMITTALS

A. No separate submittal is required. Submit product data for motors, starters, and other electrical components with submittal data required for the equipment for which it serves, as required by the individual equipment specification sections.

1.05 QUALITY ASSURANCE

A. Electrical components and materials shall be NRTL listed.

PART 2 PRODUCTS

2.01 MOTORS

A. The following are basic requirements for simple or common motors. For special motors, more detailed and specific requirements are specified in the individual equipment specifications.

1. Torque characteristics shall be sufficient to satisfactorily accelerate the driven loads.

2. Motor sizes shall be large enough so that the driven load will not require the motor to operate in the service factor range.

3. 2-speed motors shall have 2 separate windings on poly-phase motors.

4. Temperature Rating: Rated for 40°C (104 deg. F) environment with maximum 50°C (122 deg. F) temperature rise for continuous duty at full load (Class A Insulation). Other ratings as specified in equipment specifications.

5. Service Factor: 1.15 for poly-phase motors and 1.35 for single phase motors.

6. Motor Construction: NEMA Standard MG 1, general purpose, continuous duty, Design "B", except "C" where required for high starting torque.

a. Frames: NEMA Standard No. 48 or 56; use driven equipment manufacturer's standards to suit specific application.

b. Bearings: Ball or roller bearings with inner and outer shaft seals; re-greasable, except permanently sealed where motor is normally inaccessible for regular maintenance; designed to resist thrust loading where belt drives or other drives produce lateral or axial thrust in motor. For fractional horsepower, light duty motors, sleeve type bearings are permitted.

c. Enclosure Types: Totally enclosed fan cooled.

d. Overload Protection: Built-in thermal overload protection and, where indicated, internal sensing device suitable for signaling and stopping motor at starter.

e. Noise Rating: "Quiet" rating on motors located in occupied spaces.

f. Efficiency: "Energy Efficient" motors shall have a minimum efficiency as scheduled in accordance with IEEE Standard 112, test method B.

PART 3 EXECUTION

3.01 INSTALLATION

A. Installation of electrical components and material shall be in accordance with the requirements of Division 16 of these specifications.

END OF SECTION

SECTION 15050

BASIC MECHANICAL MATERIALS AND METHODS

PART 1 - GENERAL

1.01 RELATED DOCUMENTS

A. Drawings and general provisions of Contract, including General and Supplementary Conditions and Division 1 Specification sections, apply to work of this section as if repeated herein.

1.02 DESCRIPTION

A. This section specifies piping materials and installation methods common to more than one section of Division 15 and includes joining materials, piping specialties, and basic piping installation instructions.

B. Related Sections:

1. Section 15010, "BASIC MECHANICAL REQUIREMENTS" section applies to the work of this Section as if repeated herein.

2. Piping materials and installation methods peculiar to individual systems are specified within their respective system specification sections of Division 15.

3. Valves are specified in a separate section and in individual piping system sections of Division 15.

1.03 SUBMITTALS

A. Refer to Division 1 and Basic Mechanical Requirements for administrative and procedural requirements for submittals.

B. Product Data: Submit product data on the following items:

Escutcheons
Dielectric Unions and Fittings
Mechanical Sleeve Seals

C. Quality Control Submittals: Submit welders' certificates specified in Quality Assurance below.

1.04 QUALITY ASSURANCE

A. Welder's Qualifications: All welders shall be qualified in accordance with ASME Boiler and Pressure Vessel Code, Section IX, Welding and Brazing Qualifications.

B. Welding procedures and testing shall comply with ANSI Standard B31.1.0 - Standard Code for Pressure Piping, Power Piping, and The American Welding Society, Welding Handbook.

C. Soldering and brazing procedures shall conform to ANSI B9.1 Standard Safety Code for Mechanical Refrigeration.

D. All materials and equipment furnished under this Section shall be of a manufacturer who has been regularly engaged in the design and manufacture of the materials and equipment for a period of five (5) years.

E. Comply with all local State, National and Federal codes and regulations having jurisdiction.

1.05 DELIVERY, STORAGE, AND HANDLING

A. Provide factory-applied plastic end-caps on each length of pipe and tube, except for storage and handling to prevent pipe-end damage and prevent entrance of dirt, debris, and moisture.

B. Protect stored pipes and tubes. Elevate above grade and enclose with durable, waterproof wrapping. When stored inside, do not exceed structural capacity of the floor.

C. Protect flanges, fittings, and specialties from moisture and dirt by inside storage and enclosure, or by packaging with durable, waterproof wrapping.

PART 2 - PRODUCTS

2.01 MANUFACTURERS

A. Manufacturer Uniformity: Conform with the requirements specified in Basic Mechanical Requirements, under "Product Options."

B. Available Manufacturers: Subject to compliance with requirements, manufacturers offering piping materials and specialties which may be incorporated in the work include, but are not limited to, the following.

1. Pipe Escutcheons: Chicago Specialty Mfg. Co., Sanitary-Dash Mfg. Co., Grinnell.

2. Dielectric Unions: Eclipse, Inc., Perfection Corp., Watts Regulator Co.

3. Mechanical Sleeve Seals: Thunderline Corp.

2.02 PIPE AND FITTINGS

A. Refer to the individual piping system specification sections in Division 15 for specifications on piping and fittings relative to that particular system.

B. Street elbows, bushings, and long screw fittings shall not be used.

2.03 JOINING MATERIALS

A. Welding Materials: Comply with Section II, Part C, ASME Boiler and Pressure Vessel Code for welding materials appropriate for the wall thickness and chemical analysis of the pipe being welded.

B. Brazing Materials: Comply with SFA-5.8, Section II, ASME Boiler and Pressure Vessel Code for brazing filler metal materials appropriate for the materials being joined.

C. Soldering Materials: Refer to individual piping system specifications for solder appropriate for each respective system.

D. Gaskets for Flanged Joints: Gasket material shall be full-faced for cast-iron flanges and raised-face for steel flanges. Select materials to suit the service of the piping system in which installed and which conform to their respective ANSI Standard (A21.11, B16.20, or B16.21). Provide materials that will not be detrimentally affected by the chemical and thermal conditions of the fluid being carried. Unlike flanges shall not be used together.

2.04 PIPING SPECIALTIES

A. Escutcheons: Chrome-plated, stamped steel, hinged, split-ring escutcheon, with set screw. Inside diameter shall closely fit pipe outside diameter, or outside of pipe insulation where pipe is insulated. Outside diameter shall completely cover the opening in floors, walls, or ceilings.

B. Unions: Malleable-iron, Class 150 for low pressure service and Class 250 for high pressure service; hexagonal stock, with ball-and-socket joints, metal-to-metal bronze seating surfaces; female threaded ends.

C. Dielectric Unions: Provide dielectric unions with appropriate end connections for the pipe materials in which installed (screwed, soldered, or flanged), which effectively isolate dissimilar metals, prevent galvanic action, and stop corrosion.

D. Threaded Pipe Plugs: ANSI B16.14.

E. Pipe Nipples: Fabricated from same pipe as used for connected pipe, except do not use less than Schedule 80 pipe where length remaining unthreaded is less than 40 mm *(1-1/2")* and where pipe size is less than 32 mm *(1-1/4")*, and do not thread nipples full length (no close nipples).

F. Forged-Steel Socket-Welding and Threaded Fittings: ANSI B16.11, except MSS SP-79 for threaded reducer inserts, and rated to match schedule of connected pipe.

G. Branch Connection Fittings: Carbon steel, Weld-O-Lets, Thread-O-Lets, Nip-O-Lets and Sock-O-Lets as manufactured by Bonney Forge and Tool Works, or Type 1 Branchlets as manufactured by Allied Piping Products. Connections shall comply with ANSI B31.1, B16.9, and B16.11.

H. Forged Steel Flanges: ANSI/ASTM A-181 for 1035 kpa *(150-lb.)* and 2070 kpa *(300-lb.)* pressure ratings and ANSI Standard B16.5. Flanges shall have raised face with spiral serrated finish. Material shall be forged carbon steel conforming to ANSI/ASTM A-181, Grade 1 or 2. Flange markings shall be similar to markings on weld fittings. Flanges shall be of the welding neck type wherever possible. When conditions indicate the use of slip-on flanges, they may be used provided welds are made on both the inside and outside of the flange.

I. Test Wells: Provide test wells in all locations shown on the drawings. Test wells shall be carbon steel, conforming to ASME Boiler Test Code and shall be one piece solid bored construction with the outside diameter tapered from the thread to the end of the well. On insulated lines, test wells shall have extension length equal to the insulation thickness. Test wells shall have threaded plug and chain attached to body.

J. Sleeves:

1. Sheet-Metal Sleeves: 3.5 mm *(10 gage)*, galvanized sheet metal, round tube closed with welded longitudinal joint.

2. Steel Sleeves: Schedule 40 galvanized, welded steel pipe, ASTM A53, Grade B.

K. Mechanical Sleeve Seals: Modular mechanical type, consisting of interlocking synthetic rubber links shaped to continuously fill annular space between pipe and sleeve, connected with bolts and pressure plates which cause rubber sealing elements to expand when tightened, providing watertight seal and electrical insulation.

L. Dielectric Waterway Fittings: Electroplated steel or bras nipple, with an inert and non-corrosive, thermoplastic lining.

M. Y-Type Strainers: Provide strainers full line size of connecting piping, with ends matching piping system materials. Screens shall

be Type 304 stainless steel, with 1.2 mm *(3/64")* perforations at 2.77 per square mm*(233 per square inch)*.

1. Provide strainers with 865 kpa *(125 psi)* working pressure rating.

2. Threaded ends, 50 mm *(2")* and smaller: Cast-iron body, screwed screen retainer with centered blowdown fitted with pipe plug.

3. Threaded ends, 65 mm *(2 1/2")* and larger: Cast-iron body, bolted screen retainer with centered blowdown fitted with pipe plug.

4. Flanged ends, 65 mm *(2 1/2")* and larger: Cast-iron body, bolted screen retainer with centered blowdown fitted with pipe plug.

5. Butt welded ends, 65 mm *(2 1/2")* and larger: Schedule 40 cast iron carbon steel body, bolted screen retainer with off-center blowdown fitted with pipe plug.

6. Grooved ends, 65 mm *(2 1/2")* and larger: Tee pattern, ductile iron or malleable iron body and access end cap, access coupling with EDPM gasket.

2.05 EQUIPMENT FOUNDATIONS

A. Unless otherwise specified, all floor-mounted mechanical equipment located in equipment rooms, including "loft" spaces, shall be installed on reinforced concrete base extending 90 mm (3-1/2 inches) above the finished floor, poured integrally with the floor or poured on top of the floor and doweled or keyed to the floor. Edges of the pads shall extend horizontally 150 mm (six (6) inches) beyond the limits of the equipment mounted thereon, and the edges of the pads shall be chamfered.

PART 3 - EXECUTION

3.01 PREPARATION

A. Ream ends of pipes and tubes, and remove burrs. Bevel plain ends of steel pipe.

B. Remove scale, slag, dirt, and debris for both inside and outside of piping and fittings before assembly.

3.02 INSTALLATION

A. General Locations and Arrangements: Drawings (plans, schematics, and diagrams) indicate the general location and arrangement of the piping systems. Location and arrangement of piping layout take into consideration pipe sizing and

friction loss, expansion, pump sizing, and other design considerations. So far as practical, install piping as indicated. Refer to individual system specifications for requirements for coordination of drawing submittals.

B. Conceal all pipe installations in walls, pipe chases, utility spaces, above ceilings, below grade or floors, unless indicated otherwise.

C. Install piping free of sags or bends and with ample space between piping to permit proper insulation applications.

D. Install exposed piping at right angles or parallel to building walls. Diagonal runs are not permitted, unless expressly indicated on the Drawings.

E. Install piping tight to slabs, beams, joists, columns, walls, and other permanent elements of the building. Provide space to permit insulation applications, with 25 mm *(1")* clearance outside the insulation. Allow sufficient space above removable ceiling panels to allow for panel removal.

F. Locate groups of pipes parallel to each other, spaced to permit applying full insulation and servicing of valves.

G. Install drains at low points in mains, risers, and branch lines consisting of a tee fitting, 20 mm *(3/4")* ball valve, and short 20 mm *(3/4")* threaded nipple and cap.

H. Exterior Wall Penetrations: Seal pipe penetrations through exterior walls using sleeves and mechanical sleeve seals. Pipe sleeves smaller than 150 mm *(6")* shall be steel; pipe sleeves 150 mm *(6")* and larger shall be sheet metal.

I. Fire Barrier Penetrations: Where pipes pass through fire rated walls, partitions, ceilings, or floors, the fire rated integrity shall be maintained. Refer to Division 7 for special sealers and materials.

J. Electrical Equipment Spaces: Do not run piping through transformer vaults, and other electrical or electronic equipment spaces and enclosures.

K. Underground Piping: Underground piping shall have a 610 mm *(24")* minimum bury. No metal piping for any service shall be installed in or below cinders or in a locations that are conducive to rapid corrosive action, nor shall any metal conduits be so installed.

L Installation of Temperature Controls Valves: Temperature control valves shall be furnished by the control subcontractor, unless indicated otherwise, and installed by the piping contractor. Control valves shall be installed in an upright position. The Piping Contractor shall coordinate valve installation with the Control Contractor for proper port connections, direction of flow, and proper connections to the piping material. Provide unions in-line to each connection to threaded end control valves.

3.03 FITTINGS AND SPECIALTIES

A. Use fittings for all changes in direction. Branch connections may be fittings, weldolets, threadolets, or nippolets.

B. Remake leaking joints using new materials.

C. Install strainers on the supply side of each control valve, pressure reducing or regulating valve, solenoid valve, and elsewhere as indicated.

D. Install unions adjacent to each valve, and at the final connection to each piece of equipment and plumbing fixture having 50 mm *(2")* and smaller connections, and elsewhere as indicated.

E. Install flanges in piping 65 mm *(2-1/2")* and larger, where indicated, adjacent to each valve and at the final connection to each piece of equipment.

F. Install dielectric unions to connect piping materials of dissimilar metals.

3.04 JOINTS

A. Steel Pipe Joints:

1. Pipe 50 mm *(2")* and Smaller: Thread pipe with tapered pipe threads in accordance with ANSI B2.1. Cut threads full and clean using sharp dies. Ream threaded ends to remove burrs and restore full inside diameter. Apply pipe joint lubricant or sealant suitable for the service for which the pipe is intended on the male threads at each joint and tighten joint to leave not more than 3 threads exposed.

2. Pipe Larger than 50 mm *(2")* :

a. Weld pipe joints (except for exterior water service pipe) in accordance with ASME Code for Pressure Piping, B31.

b. Weld pipe joints of exterior water service pipe in accordance with AWWA C206.

c. Install flanges on all valves, apparatus, and equipment. Weld pipe flanges to pipe ends in accordance with ASME B31.1.0 Code for Pressure Piping. Clean flange faces and install gaskets. Tighten bolts to torque specified by manufacturer of flange and flange bolts, to provide uniform compression of gaskets.

B Laboratory Supply System Joints: Refer to Section 15494, "LABORATORY SUPPLY SYSTEMS," and Section 15498, "LABORATORY SUPPLY SYSTEM

(LIQUID NITROGEN)" for the specific joint requirements of the special supply systems.

C. General Non-Ferrous Pipe Joints:

1. Brazed and Soldered Joints: For copper tube and fitting joints, braze joints for Pressure Piping, Power Piping and ANSI B9.1 - Standard Safety Code for Mechanical Refrigeration.

2. Thoroughly clean tube surface and inside surface of the cup of the fittings, using very fine emery cloth, prior to making soldered or brazed joints. Wipe tube and fittings clean and apply flux. Flux shall not be used as the sole means for cleaning tube and fitting surfaces.

3. Mechanical Joints: Flared compression fittings may only be used to connect tubing to valves, filters, dryers and other specialties.

D. Joints for other piping materials are specified within the respective piping system sections.

E. Eccentric Couplings: Eccentric reducing couplings shall be provided in all cases in water piping where air or water pockets would otherwise occur due to a change in pipe size. Eccentric couplings on water lines shall bring the pipe flush on top.

F. Flanged Connections at Pumps: Flanges used to connect to flanged pumps shall be flat-face flanges with full-face gaskets.

3.05 GENERAL PIPE CLEANING, INSPECTING

A. Cleaning and inspecting shall be performed as described in this section unless specific cleaning and inspecting criteria are specified in the individual section, which ever is stricter shall apply.

B. Inspect pressure piping in accordance with procedures of ANSI B31.

C. Prior to testing, the inside of each completed piping system shall be thoroughly cleaned of all dirt, loose scale, sand and other foreign material. Cleaning shall be by sweeping, flushing with water or blowing with compressed air, as appropriate for the size and type of pipe. The contractor shall install temporary strainers, temporarily disconnect equipment or take other appropriate measures to protect equipment while cleaning piping. All copper tube shall be flushed with hot water and trisodium phosphate to remove excess solder flux inside tube.

D. Cleaning: After system is complete, the Contractor shall add trisodium phosphate in an aqueous solution to the system at the proportion of one pound per fifty gallons of water in the system. After the system is filled with this solution, the system shall be brought up to 82 deg. C *(180°F)* and allowed to circulate for two

hours. The system shall then be drained completely, all strainers shall be removed, cleaned and replaced and the entire system refilled with fresh water. The SDR shall be given notice of this cleaning operation and may be present to observe the cleaning operation, and if the SDR deems it necessary, the cleaning operation shall be repeated. After the system has been cleaned, it shall be tested by litmus paper and shall be left on the slightly alkaline side (pH = 7.5). If the system is found to be still on the acid side, the cleaning by the use of trisodium phosphate shall be repeated.

E. Field Quality Control

1. Testing: Refer to individual piping system specification sections where applicable. For other piping systems, the following procedure shall be performed:

2. General: Perform leakage tests on all pipe installed in this project. Furnish all equipment, material, personnel and supplies to perform the tests and shall make all taps and other necessary temporary connections. The test pressure, allowable leakage and test medium shall be as specified and as shown in the following Schedule. Test pressure shall be measured at the highest point on the line unless specifically noted otherwise. Leakage tests shall be performed on all piping at a time agreed upon and in the presence of the SDR.

3. Buried Piping: The leakage test for buried piping shall be made after all pipe is installed and backfilled. However, the Contractor may conduct preliminary tests prior to backfill. If the Contractor elects to conduct preliminary tests, provide any necessary temporary thrust restraint.

4. Exposed piping: All supports, anchors, and blocks shall be installed prior to the leakage test. No temporary supports or blocking shall be installed for final test.

5. Accessories: It shall be the responsibility of the Contractor to block off or remove equipment, valves, gauges, etc., which are not designed to withstand the full test pressure.

6. Testing Apparatus: Provide pipe taps, nozzles, pumps, gauges and connections as necessary in piping to permit testing including valves to isolate the new system, addition of test media, and draining lines and disposal of water, as is necessary. These openings shall be plugged in a manner favorably reviewed by the SDR after use. Provide all required temporary bulkheads. Test piping system before insulation is installed wherever feasible, and remove control devices before testing. Test each natural section of each piping system independently, but do not use piping system valves to isolate sections where test pressure exceeds valve pressure

rating. Fill each section with water and pressurize for the ndicated pressure and time.

7. Repair piping systems sections that fail the required piping test, by disassembly and reinstallation, using new materials to the extent required to overcome leakage. Do not use chemicals, stop-leak compounds, mastics, or other temporary repair methods.

8. Drain test water from piping systems after testing and repair work has been completed.

9. Pneumatic Testing: Piping tested by air or another gas shall show no reduction of pressure during the test period after corrections have been made for changes in temperature.

10. Precautions for Pneumatic Testing: Where gas is called for as the test medium, the Contractor shall take special precautions to protect personnel. During the initial pressurization of a pipeline to the specified test pressure, personnel shall be protected by suitable barricades or shall remove themselves to locations where portions of the concrete structure itself are between them and the pipeline under test.

11. Correction of Defects: If leakage exceeds the allowable, the installation shall be repaired or replaced and leakage tests shall be repeated as necessary until conformance to the leakage test requirements specified herein have been fulfilled. All visible leaks shall be repaired even if the pipeline passes the allowable leakage test.

12. Drying: Gas lines tested with water shall be drained and blown dry.

13. Reports: The Contractor shall keep records of each piping test, including:

    a. Description and identification of piping tested.
    b. Test pressure.
    c. Date of test.
    d. Witnessing by Contractor and Engineer.
    e. Test evaluation.
    f. Remarks, to include such items as:

        (1) Leaks (type, location).
        (2) Repairs made on leaks.

    Test reports shall be submitted to the SDR.

14. Venting: Where not shown on the Drawings, the Contractor may install valved "tees" at high points on piping to permit venting of air. Valves shall be capped after testing is completed.

END OF SECTION

SECTION 15100

VALVES

PART 1 - GENERAL

1.01 RELATED DOCUMENTS

A. Drawings and general provisions of Contract, including General and Supplementary Conditions and Division I Specification sections, apply to work of this section as if repeated herein.

1.02 DESCRIPTION

A. This Section includes general duty valves common to most mechanical piping systems.

B. Special purpose valves are specified in individual piping system specifications.

C. Valve tags and charts are specified in Section 15190 "MECHANICAL IDENTIFICATION."

1.03 SUBMITTALS

A. Submit product data, including body material, valve design, pressure and temperature classification, end connection details, seating materials, trim material and arrangement, dimensions and required clearances, and installation instructions.

1.04 QUALITY ASSURANCE

A. Single Source Responsibility: Provide valves from a single source where possible.

B. American Society of Mechanical Engineers (ASME) Compliance: Comply with ASME B31.9 for building services piping and ASME B31.1 for power piping.

C. Manufacturers Standardization Society of the Valve and Fittings Industry (MSS) Compliance: Comply with the various MSS Standard Practices referenced.

1.05 DELIVERY, STORAGE, AND HANDLING

A. Preparation For Transport: Prepare valves for shipping as follows:

1. Ensure valves are dry and internally protected against rust and corrosion.

2. Protect valve ends against damage to threads, flange faces, and weld-end preps.

3. Set gloge and gate valves closed to prevent rattling; set ball and plug valves open to minimize exposure of functional surfaces; set butterfly valves closed or slightly open; block swing check valves in either closed or open position.

B. Storage: Use the following prercautions during storage:

1. Do not remove valve end protectors unless necessary for inspection; then reinstall for storage.

2. Protect valves from weather. Store valves indoors. Maintain valve temperature higher than the ambient dew point temperature. If outdoor storage is necessary, support valves off the ground or pavement in watertight enclosures.

C. Handling: Use a sling to handle valves whose size requires handling by crane or lift. Rig valves to avoid damage to exposed valve parts. Do not use hand wheels and stems as lifting or rigging points.

PART 2 - PRODUCTS

2.01 MANUFACTURERS

A. Manufacturer: Subject to compliance with requirements, provide products from one of the manufacturers listed in following valve schedules.

2.02 VALVES FEATURES, GENERAL

A. Valve Design: Rising stem (RS) or rising outside screw and yoke (OS&Y) stems.

1. Nonrising stem (NRS) valves may be used where headroom prevents full extension of rising stems, except for fire protection system valves.

B. Pressure and Temperature Ratings: As scheduled and required to suit system pressures and temperatures.

C. Sizes: Same size as upstream pipe, unless otherwise indicated.

D. Operators: Provide the following special operator features:

1. Handwheels, fastened to valve stem, for valves other than quarter turn.

2. Lever handles, on quarter-turn valves 6-inch and smaller, except for plug valves. Provide plug valves with square heads; provide one wrench for every 10 plug valves.

3. Chain-wheel operators, for valves 65 mm *(2-1/2-inch)* and larger, installed 1825 mm *(72 inches)* or higher above finished floor elevation. Extend chains to an elevation of 1524 mm *(5'-0")* above finished floor elevation.

4. Gear drive operators, on quarter-turn valves 200 mm *(8-inch)* and larger.

E. Extended Stems: Where insulation is indicated or specified, provide extended stems arranged to receive insulation.

F. Bypass and Drain Connections: Comply with MSS SP-45 bypass and drain connections.

G. End Connections: As indicated in the valve specifications.

1. Threads: Comply with ANSI B1.20.1.

2. Flanges: Comply with ANSI B16.1 for cast iron, ANSI B16.5 for steel, and ANSI B16.24 for bronze valves.

3. Solder-Joint: Comply with ANSI B16.18, use solder having a melting point below 445 degrees C *(840 degrees F)* for gate, globe, and check valves; below 215 degrees C *(421 degrees F)* for ball valves.

2.03 VALVE PRESSURE/TEMPERATURE CLASSIFICATION SCHEDULES

VALVES, 50 mm *(2-INCH)* AND SMALLER

SERVICE	GATE	GLOBE	BALL	CHECK
Condenser Water *	125	125	150	125
Chilled Water **	125	125	150	25
Domestic Hot and Cold Water	125	125	15	125
Heating Water	150	150	150	150

VALVES, 65 mm *(2-1/2-INCH)* AND LARGER

SERVICE	GATE	GLOBE	BFLY	CHECK
Condenser Water *	125	125	200	125
Chilled Water **	125	125	200	125

Domestic Hot and Cold Water	125	125	200	125
Heating Water	125	125	200	125

* this includes all piping utilized in open cooling towers
** this includes lab chilled water

2.04 GATE VALVES

A. Gate Valves, 50 mm *(2-Inch)* and Smaller: MSS SP-80; Class 125, body and bonnet of ASTM B 62 cast bronze; with threaded or solder ends, solid disc, copper-silicon alloy stem, brass packing gland, "Teflon" impregnated packing, and malleable iron handwheel.

	THREADED				SOLDER			
MANUFACTURER	NRS		RS		NRS		RS	
Crane	438		428		1701S		1700S	
Grinnell	3000		3010		3000SJ		010SJ	
Hammond	IB645	IB640	IB647		IB635			
Jenkins	370		47		1240		1242	
Lunkenheimer	2129		2127		2133		2132	
Milwaukee	105		148		115		1149	
Nibco	T113	T111		S113		S111		
Powell	507		500		1822		1821	
Stockham	B103		B-100	B-104	B-108			

B. Gate Valves, 50 mm *(2-Inch)* and Smaller: MSS SP-80; Class 150, body and union bonnet of ASTM B 62 cast bronze; with threaded or solder ends, solid disc, copper-silicon alloy stem, brass packing gland, "Teflon" impregnated packing, and malleable iron handwheel. Do not use solder end valves for heating water piping applications.

	THREADED				SOLDER			
MANUFACTURER	NRS		RS		NRS		RS	
Crane	x		431UB	x		x		
Grinnell	3050		3060		x		x	
Hammond	IB637		IB629	x		IB648		
Jenkins	x		47U		x		x	
Lunkenheimer	3153		3151		3154		3155	
Milwaukee	x		1151		x		1169	
Nibco	T-136	T-135		S-136		x		
Powell	2712		2714		x		1842	
Stockham	B-130		B-120		x		B-124	

x means not available.

C. Gate Valves 65 mm *(2-1/2-Inch)* and Larger: MSS SP-70; Class 125 iron body, bronze mounted, with body and bonnet conforming to ASTM A 126 Class B; with flanged ends, "Teflon" impregnated packing and two-piece backing gland assembly.

MANUFACTURER	OS&Y	RSNRS
Crane	465-1/2	461
Grinnell	6020A	6060A
Hammond	IR1140	R1138
Jenkins	651A	326
Lunkenheimer	1430	1428
Milwaukee	F2885	F-2882
Nibco	617-0	F-619
Stockham	G623	G-612
Powell	1793	1787

2.05 BALL VALVES

A. Ball Valves, 25 mm *(1 Inch)* and Smaller: Rated for 1035 kpa *(150 psi)* saturated steam pressure, 2760kpa *(400 psi)* WOG pressure; two-piece construction; with bronze body conforming to ASTM B 62, standard (or regular) port, chrome-plated brass ball, replaceable "Teflon" or "TFE" seats and seals, blowout-proof stem, and vinyl-covered steel handle. Provide solder ends for domestic hot and cold water service; threaded ends for heating water, condenser water and chilled water.

MANUFACTURER	THREADED ENDS		SOLDER ENDS
Conbraco (Apollo)	70-100	70-200	
Crane	9302		9322
Grinnell	3500		3500SJ
Jamesbury	351		x
Jenkins	900T		902T
Lunkenheimer	708HST		x
Metraflex	IT		IS
Nibco	T-580	S-580	
Powell	4210T	x	
Stockham	S-216 BR-R-T		S-216 BR-R-S
Watts	B-6000		B-6001

x means not available.

B. Ball Valves, 32mm to 50 mm *(1-1/4-Inch to 2-Inch)*: Rated for 1035kpa *(150 psi)* saturated steam pressure, 2760kpa *(400 psi)* WOG pressure; 3-piece construction; with bronze body conforming to ASTM B 62, conventional port, chrome-plated brass ball, replaceable "Teflon" or "TFE" seats and seals, blowout proof stem, and vinyl-covered steel handle. Provide solder ends for domestic hot and cold water service; threaded ends for heating water, condenser water and chilled water.

MANUFACTURER	THREADED ENDS	SOLDER ENDS
Conbraco (Apollo)	82-100	82-200
Grinnell	3810	3810SJ
Nibco	T-590-Y	S-590-Y
Powell	4201R x	
Stockham	S-216 BR-R-T	S-216 BR-R-S
Watts	B-6800	B-6801

2.06 PLUG VALVES

A. Plug Valves, 50mm*(2-Inch)* and Smaller: Rated at 1035kpa *(150 psi)* WOG; bronze body, with straightaway pattern, square head, and threaded ends.

Crane	1228
Lunkenheimer	454
Nordstrom	142
Homestead	612

B. Plug Valves, 65 mm *(2-1/2-Inch)* and Larger: MSS SP-78; rated at 1210kpa *(175 psi)* WOG; lubricated plug type, with semisteel body, single gland, wrench operated, and flanged ends.

Homestead	612
Rockwell-Nordstrom	143
Powell	2201

2.07 GLOBE VALVES

A. Globe Valves, 50 mm *(2-Inch)* and Smaller: MSS SP-80; Class 125; body and screwed bonnet of ASTM B 62 cast bronze; with threaded or solder ends, brass or replaceable composition disc, copper-silicon alloy stem, brass packing gland, Teflon" impregnated packing, and malleable iron handwheel.

MANUFACTURER	THREADED	SOLDER
Crane	1	1310
Grinnell	3210	3210SJ
Hammond	IB440	IB423

Jenkins	746	1200
Lunkenheimer	2140	2146
Milwaukee	502	1502
Nibco	T-211-B	S-211-B
	T-211-Y	S-211-Y
Powell	650	1823
Stockham	B-16	B-14T

B. Globe Valves, 65 mm *(2-1/2 Inch)* and Larger: MSS SP-85; Class 125 iron body and bolted bonnet conforming to ASTM A 126, Class B; with outside screw and yoke, bronze mounted, flanged ends, and "Teflon" impregnated packing, and two-piece backing gland assembly.

MANUFACTURER	STRAIGHT BODY	ANGLE BODY
Crane	351	353
Grinnell	6200A	x
Hammond	IR116	R118
Jenkins	613	x
Lunkenheimer	1123	1124
Milwaukee	F2981	F2986
Nibco	F-718-B	F-818-B
Powell	241	243
Stockham	G-512	G-515

x means not available.

2.08 BUTTERFLY VALVES

A. Butterfly Valves, 65 mm *(2-1/2-Inch)* and Larger: MSS SP-67; rated at 1380 kpa *(200 psi)*; cast-iron body conforming to ASTM A 126, Class B. Provide valves with field replaceable EPDM sleeve, aluminum bronze disc, stainless steel stem, and EPDM 0-ring stem seals. Provide lever operators with locks for sizes 65mm through 150 mm *(2-1/2 through 6 inches)* and gear operators with position indicator for sizes 200 mm through 610 mm *(8 through 24 inches)*. Provide lug type as indicated. Drill and tap valves on dead-end service.

1. The following are model numbers for lug-type, with aluminum-bronze disc:

MANUFACTURER	LEVER	GEAR
Center Line	Series LT	Series LT
Crane	44	44
Conbraco (Apollo)	6L-14X-01	6L-14X-02

Grinnell	LC-8289-7	LC-8282-7
Keystone	129	129
Nibco	LC-20003	LD-20005
Powell	5011-BA1	5011-BA1
Stockham	LG-712-BS3E	LG-722-BS3E
Watts	BF-03-121-11	BF-03-121-12

2.09 CHECK VALVES

A. Swing Check Valves, 50 mm *(2-Inch)* and Smaller: MSS SP-80; Class 125, cast-bronze body and cap conforming to ASTM B 62; with horizontal swing, Y-pattern, and bronze disc; and having threaded or solder ends. Provide valves capable of being reground while the valve remains in the line.

MANUFACTURER	THREADED ENDS	SOLDER ENDS
Crane	37	1342
Grinnell	3300	3300SJ
Hammond	IB940	IB941
Jenkins	92-A	1222
Lunkenheimer	2144	2145
Milwaukee	509	509
Nibco	T-413	S-413
Powell	578	1825
Stockham	B-319	B-309

B. Swing Check Valves, 65 mm *(2-1/2-Inch)* and Larger: MSS SP-71; Class 125, cast iron body and bolted cap conforming to ASTM A 126, Class B; horizontal swing, and bronze disc or cast-iron disc with bronze disc ring; and flanged ends. Provide valves capable of being refitted while the valve remains in the line.

MANUFACTURER	CLASS 125
Crane	373
Grinnell	6300A
Hammond	IR1124
Jenkins	x
Kennedy	x
Lunkenheimer	1790 IBBM
Milwaukee	F2974
Nibco	F-918
Powell	559
Stockham	G-931

x means not available.

C. Wafer Check Valves: Class 250, cast-iron body; with replaceable bronze seat, and non-slam design lapped and balanced twin bronze flappers and stainless steel trim and torsion spring. Provide valves designed to open and close at approximately one foot differential pressure.

Bell & Gossett:	NS
Center Line:	CLC
Metraflex:	Chexx
Mission:	12HMP
Stockham:	WG970

D. Lift Check Valves, 50 mm *(2-Inch)* and Smaller: Class 125; cast-bronze body and cap conforming to ASTM B 62; horizontal or angle pattern, lift-type valves, with stainless steel spring, bronze disc holder with renewable "Teflon" disc, and threaded ends. Provide valves capable of being refitted and ground while the valve remains in the line.

MANUFACTURER	HORIZONTAL	ANGLE
Crane	124b	x
Hammond	x	IB954
Jenkins	655-A	x
Lunkenheimer 233		x

x means not available.

2.10 BALANCING VALVES

A. Combination balancing and shutoff valves with an internal mechanism that can be set at the balance point so that the valve may be closed and opened, but not opened beyond the balance position. Valve bodies shall be brass or semi-steel, solder, screwed or flanged ends. Balancing valves shall be equipped with 2 Petes Plugs for reading differential pressure, Bell and Gossett Circuit Setter or approved equal.

2.11 WATER TEMPERATURE CONTROL VALVES

A. Barber-Coleman valves as specified, no substitutions.

2.12 AUTOMATIC FLOW CONTROL VALVES

A. Flow control valves shall be factory calibrated, direct acting, automatic pressure compensating type. Each valve shall limit flow rates to within 5% accuracy, regardless of system pressure fluctuations. Valve control mechanism shall consist of a tamperproof, stainless steel cartridge assembly with open chambers and unobstructed flow passages. Cartridge assembly shall include a self-cleaning,

spring-loaded moving cup guided at two separate points and shall utilize the full available differential pressure to actuate without hysteresis or binding. Four differential pressure ranges shall be available with the minimum range requiring less than 15 kpad*(2 psid)*. Each valve to be provided with a metal tag, chain and stamped for system identification. Pressure taps and quick disconnect valves shall be provided with ferrous bodies. All hydronic system flow control valves shall be of one manufacturer, Griswold Controls or approved equal.

B. Furnish portable flow measuring apparatus, complete with carrying case, pressure gauge, 3-way valve, hoses and connections. Unit to be compatible with automatic flow control valves to indicate pressure differential to determine flow rate through the valve. Deliver to SDR and obtain delivery receipt.

2.13 PRESSURE REDUCING AND CHECK VALVE

A. Valve shall maintain a constant downstream pressure regardless of fluctuations in demand and shall also close tight when a pressure reversal occurs. It shall be a hydraulically-operated, pilot-controlled, diaphragm type globe or angle valve. The main valve shall have a single removable seat and a resilient disc. The stem shall be guided at both ends by a bearing in the valve cover and an integral bearing in the valve seat. No external packing glands are permitted, and there shall be no pistons operating the main valve or any pilot controls.

B. The pilot control shall be a direct-acting, adjustable, spring-loaded, normally open diaphragm valve, designed to permit flow when controlled pressure is less than the spring setting.

C. A system of auxiliary check valves shall be used to admit downstream pressure into the main valve cover chamber if pressure reversal occurs. This must result in positive closing of the main valve.

D. Valve shall be Cla-Val Co., Fisher Controls Co., Cash Valve Co., Spence Engr Co., Watts Regulator Co.

PART 3 - EXECUTION

3.01 VALVE INSTALLATIONS

A. General Application: Use gate, ball, and butterfly valves for shut-off duty; globe, ball, and butterfly for throttling duty. Refer to piping system specification sections for specific valve applications and arrangements.

B. Locate valves for easy access and provide separate support where necessary. Install valves and unions for each fixture and item of equipment arranged to allow equipment removal without system shutdown. Unions are not required on flanged devices.

C. Install three-valve bypass around each pressure reducing valve using throttling-type valves.

D. Install valves in horizontal piping with stem at or above the center of the pipe and in a position to allow full stem movement.

E. Installation of Check Valves: Install for proper direction of flow.

F. A union shall be installed adjacent to each screwed end valve.

G. Connections between ferrous and non-ferrous piping shall be made using a dielectric coupling, union, or flange.

3.02 FIELD QUALITY CONTROL

A. Examination:

1. Examine valve interior through the end ports for cleanliness, freedom from foreign matter, and corrosion. Remove special packing materials used during shipping and handling.

2. Actuate valve through an open-close and close-open cycle. Examine functionally significant features, such as guides and seats made accessible by such actuation. Following examination, return the valve closure member to the shipping position.

3. Examine threads on both valve and mating pipe for out-of-round, local indentation, and cleanliness.

4. Examine mating flange faces for conditions that might cause leakage. Check bolting for proper size, length, and material. Check gasket material for proper size, material composition suitable for service, and freedom from defects and damage.

5. Prior to valve installation, examine the piping for cleanliness, freedom from foreign materials, and proper alignment.

6. Replace defective valves with new valves per specification.

B. Tests: After piping systems have been tested and put into service, but before final adjusting and balancing, inspect valves for leaks. Adjust or replace packing to stop leaks; replace valves if leak persists.

C. Cleaning: Clean mill scale, grease, and protective coatings from exterior of valves and prepare valves to receive finish painting or insulation.

END OF SECTION

SECTION 15130

METERS AND GAUGES

PART 1 GENERAL

1.01 RELATED DOCUMENTS

A. Drawings and general provisions of Contract, including General and Supplementary Conditions and Division 1 Specification sections, apply to work of this section as if repeated herein.

1.02 DESCRIPTION

A. Provide gauges where indicated on the drawings and details in accordance with specifications.

B. Types of meters and gauges specified in this section include the following:

1. Temperature gauges and fittings

a. Glass thermometers
b. Thermometer wells
c. Temperature gauge connector plugs

1. Pressure gauges and fittings

a. Pressure gauges
b. Pressure gauge cocks
c. Pressure gauge connector plugs

C. Related: Meters and gauges furnished as part of factory-fabricated equipment, are specified as part of equipment assembly in other Division 15 sections.

1.03 QUALITY ASSURANCE

A. Manufacturer's Qualifications: Firms regularly engaged in the manufacturer of meters and gauges, of types and sizes required, whose products have been satisfactory used in similar service for not less than five (5) years.

B. Codes and Standards:

1. UL compliance: Comply with applicable UL standards pertaining to meters and gages.

2. ANSI and ASI Compliance: Comply with applicable portions of ANSI and ASI standards pertaining to meters and gages.

3. Certification: Provide meters and gauges whose accuracies, under specified operating conditions, are certified by manufacturer.

1.04 SUBMITTALS

A. Submit manufacturer's data including scale range, ratings, and performance curve.

PART 2 PRODUCTS

2.01 GLASS THERMOMETERS

A. Case: V-shape die cast aluminum finished in chrome, bronze or green epoxy enamel. Heavy glass lens.

B. Adjustable Joint: Encloses capillary and provides rotation and tilt angle adjustment and lock.

C. Tube and Capillary: Mercury filled magnifying lens with red reading tube.

D. Accuracy: 1% of scale range.

E. Scale: 230 mm (9") scale, aluminum or white with black markings and numbers. Scale shall be adjustable for calibration. Select range compatible with working temperatures.

F. Separable Socket: Brass. Provide stainless steel for thermometer in corrosive liquid lines.

G. Range:

1. Domestic Hot Water: 30 to 240 deg. F with 2-degree scale divisions.

2. Domestic Cold Water: 0 to 120 deg. F with 1 degree scale divisions.

3. Heating Hot Water: 30 to 300 deg. F with 1 degree scale divisions.

4. Chilled Water: 20 to 100 deg. F with 1 degree scale divisions.

H. Manufacturers:

1. Ashcroft

2. Weiss
3. Weksler
4. Trerice

2.02 THERMOMETER WELLS

A. General: Provide thermometer wells constructed of brass or stainless steel, pressure rated to match piping system design pressure. Provide 2” extension for insulated piping. Provide cap nut with chain fastened permanently to thermometer well.

B. Manufacturers:

1. Marsh
2. Taylor
3. Weiss

2.01 PRESSURE GAUGES

A. Dial Size: 115 mm (4-1/2").

B. Case: One piece phenolic turret type, with safety blowout disc.

C. Accuracy: 1/2 of 1% of full scale range.

D. Bourdon Tube: Phosphor bronze, brass socket, 10 mm (1/4") connection with forged brass socket and tip and silver brazed joints.

E. Movement: Stainless steel rotary type with geared adjustable micrometer pointer.

F. Dial: White background, black lines and numerals.

G. Window: Plastic disc.

H. Range: Select with normal operating pressure in the middle one third of scale.

I. Manufacturers:

1. Ashcroft: No. 1279A
2. Weiss: Series UG
3. Weksler: Type P
4. Moeller: Vantage, Case 03.

2.02 PRESSURE AND TEMPERATURE TEST PLUGS

A. Provide where indicated (P&T Test Plug) "Pete's Plug,10 mm (1/4")-MPT fitting to receive either a temperature or pressure probe 5 mm (1/8") OD. Fitting shall be solid brass with valve core of Nordel (Max 135 degrees C (275 degrees F), fitted with a color coded and marked cap with gasket, and shall be rated at 6895 kpag (1,000 psig).

B. Manufacturers: Peterson Engineering Co., P.O. Box 217, Richardson, Texas 75080; or Universal Lancaster, P.O. Box 34658, Dallas, Texas; or equal.

C. The Contractor shall deliver to Sandia, and obtain delivery receipt, the following test equipment:

1. One (2) 65 mm (2-1/2") Quality Gages, 0-690kpa (0-100 psi)
2. One (1) Pressure Gage Adapters with 5 mm (1/8") Probe
3. One (1) Test Thermometers, -3 to 52 degrees C (25 to 125 degrees F), 5 mm(1/8") Stem
4. One (1) Test Thermometers, 10 to 205 degrees C (50 to 400 degrees F), 5 mm(1/8") Stem

PART 3 EXECUTION

3.0 INSTALLATION

A. Install gauges on water lines with tee handle cock
B. Install gauges on pump discharges with pulsation dampener and tee handle cock.

C. Install thermometers in accordance with manufacturer's instructions. Coordinate with other work. Calibrate units to insure accurate readings.

END OF SECTION

SECTION 15140

SUPPORTS AND ANCHORS

PART 1 - GENERAL

1.01 RELATED DOCUMENTS

A. Drawings and general provisions of Contract, including General and Supplementary Conditions and Division 1 Specification sections, apply to work of this section as if repeated herein.

1.02 DESCRIPTION

A. This section specifies hangers, supports and anchors for use in piping systems specified in other sections of these specifications.

B. Pipe supports are generally not shown for piping less than 150 mm *(6 inches)* in diameter. Where supports are not shown, it shall be the contractor's responsibility to support all such piping in accordance with the design criteria stated herein and the support details shown on the drawings. Piping shall be supported with pipe supports designed to resist seismic loads.

C. The contractor and manufacturers shall coordinate the requirements of this section, Section 15200 "SEISMIC PROTECTION FOR MECHANICAL AND ELECTRICAL SYSTEMS", and Section 15240 "MECHANICAL SOUND AND VIBRATION CONTROL" as applicable.

D. Fire protection piping shall be supported per NFPA 13, Current Edition.

1.03 QUALITY ASSURANCE

A. Manufacturer: A firm regularly engaged in the manufacture of hangers, supports and anchors, of types and sizes required, whose products have been in satisfactory use in similar service for not less than 5 years.

B. NSPC Compliance: Comply with The Uniform Plumbing Code pertaining to product materials and installation of hangers, supports and anchors unless otherwise indicated in these specifications.

C. NTRL and FM Compliance: Provide products which are Underwriters Laboratories listed and Factory Mutual approved, when applicable.

D. Federal Specification: WW-H-171D, for Type indicated.

1.04 SUBMITTALS

A. Submit manufacturer's data on hangers, supports and anchors for each piping system. Submittal shall include, but not be limited to, dimensions, sizes, loading capacities, and installation instructions.

PART 2 - PRODUCTS

2.01 HORIZONTAL-PIPING HANGERS AND SUPPORTS

A. General: Except as otherwise indicated, provide factory-fabricated horizontal piping hangers and supports of MSS type and size required; comply with MSS SP-58 and manufacturer's published product information. Provide proper selection as determined by Installer and as specified herein for installation requirements, and comply with MSS SP-69 and manufacturer's published product information; size hangers and supports properly for piping, including insulation (if any).

B. Adjustable Clevis Hanger: MSS Type 1, fabricated from steel.

C. Adjustable Band Hanger: MSS Type 7, fabricated from steel.

D. Adjustable Swivel-Band Hanger: MSS Type 10.

E. Clamp: MSS Type 4.

F. Double-Bolt Clamp: MSS Type 3, including pipe spacers.

G. Single-Roll Support: MSS Type 41, including axle-roller and threaded sockets.

H. Adjustable Roller Hanger: MSS Type 43, including axle-roller and clevis.

I Roll/Stand: MSS Type 44, including roller, stand and axle.

J. Roll/Plate: MSS Type 45, including roller and base.

K. Slide/Plate: MSS Type 35, including one of the following plate types:

1. Plate: Unguided type.

2. Plate: Guided type.

3. Plate: Hold-down clamp type.

L. Adjustable Roll/Base: MSS Type 46, including roller, adjustable base and stand.

M. Steel Brackets: Welded structural steel shapes complying with one of the following:

1. Light Duty: MSS Type 31.

2. Medium Duty: MSS Type 32.

3. Heavy Duty: MSS Type 33.

N. Adjustable Saddle-Support: MSS Type 38, including saddle, pipe and reducer. Fabricate base-support from steel pipe and include cast-iron flange or welded-steel plate.

O. Stanchion Saddle Support: MSS Type 37, including saddle and U-bolt. Fabricate base-support from steel pipe and include cast-iron flange or welded-steel plate.

P. Saddle Support: MSS Type 36. Fabricate base-support from steel pipe and include cast-iron flange or welded-steel.

2.02 VERTICAL-PIPING CLAMPS

A. General: Except as otherwise indicated, provide factory-fabricated vertical-piping clamps of MSS type and size indicated; comply with MSS SP-58 and manufacturer's published product information. Where MSS type or size is not indicated, provide proper selection as determined by Installer for installation requirements, and comply with MSS SP-69 and manufacturer's published product information. Size clamps properly for piping, including insulation (if any).

B. Two-Bolt Riser Clamp: MSS Type 8.

C. Four-Bolt Riser Clamp: MSS Type 42, include pipe spacers at inner bolt-holes.

2.03 HANGER-ROD ATTACHMENTS

A. Except as otherwise indicated, provide factory-fabricated hanger-rod attachments of MSS type and size indicated; comply with MSS SP-58 and manufacturer's published product information. Where MSS type or size is not indicated, provide proper selection determined by Installer for installation requirements, and comply with MSS SP-69 and manufacturer's published product information. Size attachments properly for piping, including insulation (if any).

B. Turnbuckles: MSS Type 13.

C. Weldless Eye-Nut: MSS Type 17.

D. Malleable Eye-Socket: MSS Type 16.

E. Clevises: MSS Type 14.

2.04 BUILDING ATTACHMENTS

A. General: Except as otherwise indicated, provide factory-fabricated building attachments of MSS type and load-rating indicated; comply with MSS SP-58 and manufacturer's published product information. Where MSS type or load-rating is not indicated, provide proper selection determined by Installer for installation requirements, and comply with MSS SP-69 and manufacturer's published product information. Size units properly for the piping loading.

B. Concrete Inserts: MSS Type 18, steel.

C. Top Beam C-Clamp: MSS Type 19.

D. Steel C-Clamps: MSS Type 23, steel.

E. Malleable Iron C-Clamps: MSS Type 23, malleable iron.

F. Single-Side Clamp: MSS Type 25.

G. Top I-Beam Clamp: MSS Type 25.

H. Side Beam Clamp: MSS Type 20.

I. Beam Clamp/Eye-Nut: MSS Type 29.

J. Wide-Flange Beam Clamp/Eye-Nut: MSS Type 28.

K. Beam Clamp/Extension Piece: MSS Type 30.

2.05 SADDLES AND SHIELDS

A. General: Except as otherwise indicated, provide factory-fabricated saddles and shields of MSS type and size indicated; comply with MSS SP-58 and manufacturer's published product information. Where MSS type or size is not indicated, provide proper selection determined by Installer for installation requirements, and comply with MSS SP-69 and manufacturer's published product information. Size saddles and shields properly for insulation and vapor barrier (if any).

B. Protection Saddles: MSS Type 39.

C. Wood Insulation Saddle: Provide products manufactured by Elcen Metal Products Company.

D. Guided insulated pipe support: Insulated pipes on cross over racks between buildings shall be supported with Pipe Shields, Inc. Model B 4000.

E. Insulated positive pipe anchors: Insulated pipes on cross over racks between buildings shall be anchored at midpoint with Pipe Shields, Inc. Model C 4000.

2.06 MISCELLANEOUS MATERIALS

A. Metal Framing: Provide products complying with NEMA STD ML 1.

B. Steel Plates, Shapes and Bars: Provide products complying with ASTM A 36.

C. Cement Grout: Portland cement (ASTM C 150, Type I or Type III) and clean, uniformly graded, natural sand (ASTM C 404, Size No. 2). Mix at a ratio of 10 parts cement to 3.0 parts sand, by volume, with minimum amount of water required for placement and hydration.

D. Heavy Duty Steel Trapezes: Fabricate from steel shapes selected for loads required; weld steel in accordance with AWS standards.

E. Pipe Guides: Provide factory-fabricated guides, of cast semi-steel or heavy fabricated steel, consisting of a bolted two-section outer cylinder and base with a two-section guiding spider bolted tight to pipe. Size guide and spiders to clear pipe and insulation (if any), and cylinder. Provide guides of length recommended by manufacturer to allow indicated travel.

PART 3 - EXECUTION

3.01 PREPARATION

A. Proceed with installation of hangers, supports and anchors only after required building structural work has been completed in areas where the work is to be installed. Correct inadequacies including (but not limited to) proper placement of inserts, anchors and other building structural attachments.

B. Prior to installation of hangers, supports, anchors and associated work, Installer shall meet at project site with Contractor, installer of each component of associated work, inspection and testing agency representatives (if any), installers of other work requiring coordination with work of this section and Sandia Delegated Representative for purpose of reviewing material selections and procedures to be followed in performing the work in compliance with requirements specified.

3.02 INSTALLATION OF BUILDING ATTACHMENTS

A. Install building attachments at required locations within concrete or on structural steel for proper piping support. Install additional building attachments where

support is required for additional concentrated loads, including valves, flanges, guides, strainers, expansion joints, and at changes in direction of piping. Install concrete inserts before concrete is placed; fasten insert securely to forms. Where concrete with compressive strength less than 2500 psi is indicated, install reinforcing bars through openings at top of inserts. Prior to placing concrete, install nut in insert and screw threaded rod through nut until rod is firmly against top of insert body.

3.03 INSTALLATION OF HANGERS AND SUPPORTS

A. General: Install hangers, supports, clamps and attachments to support piping properly from building structure; comply with MSS SP-69. Arrange for grouping of parallel runs of horizontal piping to be supported together on trapeze type hangers where possible. Install supports with maximum spacings complying with MSS SP-69. Where piping of various sizes is to be supported together by trapeze hangers, space hangers for smallest pipe size or install intermediate supports for smaller diameter pipe. Do not use wire or perforated metal to support piping, and do not support piping from other piping.

B. Install hangers and supports complete with necessary inserts, bolts, rods, nuts, washers and other accessories. Except as otherwise indicated for exposed continuous pipe runs, install hangers and supports of same type and style as installed for adjacent similar piping.

C. Support fire-water piping independently of other piping.

D. Prevent electrolysis in support of copper tubing by use of hangers and supports which are copper plated, or by other recognized industry methods.

E. Provisions for Movement:

1. Install hangers and supports to allow controlled movement of piping systems and to permit freedom of movement between pipe anchors, and to facilitate action of expansion joints, expansion loops, expansion bends and similar units.

2. Load Distribution: Install hangers and supports so that piping live and dead loading and stresses from movement will not be transmitted to connected equipment.

3. Pipe Slopes: Install hangers and supports to provide indicated pipe slopes, and so that maximum pipe deflections allowed by ANSI B31 are not exceeded.

F. Insulated Piping: Comply with the following installation requirements.

1. Clamps: Attach clamps, including spacers (if any), to piping with clamps projecting through insulation; do not exceed pipe stresses allowed by ANSI B31.

2. Shields: Where low-compressive-strength insulation or vapor barriers are indicated on cold or chilled water piping, install coated protective shields. For pipe 8" and over, install wood insulation saddles.

3. Saddles: Where insulation without vapor barrier is indicated, install protection saddles.

3.04 INSTALLATION OF PIPE GUIDES

A. Install pipe guides complying with manufacturer's published product literature. Where not otherwise indicated, install pipe guides near expansion loops, expansion joints and ball joints.

3.05 INSTALLATION OF ANCHORS

A. Install anchors at proper locations to prevent stresses from exceeding those permitted by ANSI B31, and to prevent transfer of loading and stresses to connected equipment.

B. Fabricate and install anchor by welding steel shapes, plates and bars to piping and to structure. Comply with ANSI B31 and with AWS standards.

C. Where expansion compensators are indicated, install anchors in accordance with expansion unit manufacturer's written instructions, to limit movement of piping and forces to maximums recommended by manufacturer of each unit.

D. Anchor Spacings: Where not otherwise indicated, install anchors at ends of principal pipe runs, at intermediate points in pipe runs between expansion loops and bends. Make provisions for preset of anchors as required to accommodate both expansion and contraction of piping.

E. Painting of Base Supports: Refer to painting work sections of these specifications.

3.06 ADJUSTMENT OF HANGERS AND SUPPORTS

A. Adjust hangers and supports and place grout as required under supports to bring piping to proper levels and elevations.

END OF SECTION

SECTION 15175

VARIABLE FREQUENCY DRIVES

PART 1 GENERAL

1.01 DESCRIPTION

A. Drawings and general provisions of Contract, including General and Supplementary Conditions and Division 1 Specification sections, apply to work of this section as if repeated herein.

B. Provide all labor, material, tools, equipment, and services necessary to furnish and install the work specified herein and indicated on the drawings for a complete project, including but not limited to the following:

1. Design, construction and testing of Variable Frequency Drives (VFD's) used to control 1-60 HP 460-volt induction motors.

1.02 RELATED DOCUMENTS

A. Section 15010 - Mechanical General Requirements

B. Section 15030 - Electrical Requirements For Mechanical Equipment

C. Section 15240 - Mechanical Sound and Vibration Control

D. Section 15540 - HVAC Pumps

E. Section 15855 - Air Handling Units

F. Section 15970 - Controls

G. Section 15990 - Testing, Adjusting and Balancing

H. Division 16 - Electrical

1.03 CODES AND STANDARDS

A. NFPA-70 National Electric Code (NEC), latest edition.

B. National Electrical Manufacturers Association (NEMA).

C. American National Standards Institute (ANSI)

D. Institute for Electrical and Electronic Engineers (IEEE 519- 1992)

E. FCC, Part 15, Subpart J: CE 96.

F. NEPU-70.
G. UL 508.

H. All electrical equipment within the VFD or included with the VFD system, including enclosures, is required to be listed by NRTL and so labeled. Labeling shall include the total assembly when available, in addition to individual components. At the time of submittal, Contractor shall provide documentation of such compliance and also document any item, which does not meet this requirement.

1.04 QUALITY ASSURANCE

A. Manufacturer's Qualifications: Firms regularly engaged in the manufacturer of VFD's of types and sizes required, and whose products have been in satisfactory use in similar service for not less than 5 years. Manufacturer shall be ISO 9001 certified.

B. Quality control systems shall conform to ISO9001 standard. Under this system, quality assurance for design/development, production, installation and servicing of the manufacturer's equipment shall be certified ISO9001.

1.05 SUBMITTALS

A. Submit in accordance with Division 1, Section 01300.

1. Outline Drawings (Dimensional):

a. Arrangement
b. Plan, front view and other views, if required.
c. Required clearances for door opening.
d. Conduit entry locations.
e. Cable/wire terminal block arrangement.
f. Mounting.
g. Grounding connections.
h. Weight of each unit supplied.

2. Elementary Wiring Diagrams (Schematics):

a. Each drawing shall show device and terminal block number.
b. Approximate physical location of items in each unit.
c. All wiring within each unit.
d. Identification of all terminals, terminal blocks, and wiring.
e. Solid lines indicate manufacturer wiring. Dashed lines indicating Contractor wiring or connections.

3. Spare Parts List: Complete Spare Parts List including parts location diagrams or drawings.

4. NRTL label compliance per 1.03H this section.

5. Warranty per 1.06A this section.

6. Operating manuals per 3.06 this section.

B. Submit statement guaranteeing compatibility of VFD's with submitted motors. Coordinate with Sections 15855 - Air Handling Units, 15540 HVAC Pumps and with the motor manufacturer to guarantee that the VFD will operate properly with the submitted motors without objectionable motor noise, heat, or loss of efficiency.

C. Submit written certification of conformance to ISO9001 standard.

1.06 MANUFACTURER'S WARRANTY

A. The Manufacturer/Supplier shall warrant the VFD's against all defects for a period of two years from the satisfactory start-up date. All labor and materials shall be covered by the warranty.

PART 2 PRODUCTS

2.01 ACCEPTABLE MANUFACTURERS

A. Subject to compliance with requirements, provide VFD's of the following:

1. All drives shall be GV3000/VTAC7 series of Reliance Electric. No substitutions.

2.02 VARIABLE FREQUENCY DRIVES - UNIT DESCRIPTION

A. The variable frequency AC drive system provided shall be of a Pulse-Width-Modulated (PWM) type using very large scale integration (VLSI) techniques as well as surface mount technology for increased reliability.

B. VFD shall use two 32-bit microprocessors with 12-bit resolution to allow stepless motor control from 0.1% to 110% of motor base speed.

C. The load characteristic considered for application shall be variable torque.

D. The drive shall accept plant power nominal AC voltage of 468V AC± 5%, 3-phase, frequency 60 Hz (48 - 63 Hz). The operating ambient condition shall have a temperature range of 0-40 deg. C, with a relative humidity of 5-95% (non-condensing).

E. Control inputs and outputs:

1. isolated
2. six digital inputs
3. eight preset speeds
4. three digital outputs
5. two analog inputs
6. two analog outputs
7. floating point control
8. fully field programmable

F. I/O shall be configured by the VFD manufacturer to permit direct connection of the EMCS. Connections shall be as follows:

1. Digital input for remote start/stop of the VFD from the EMCS;
2. 4-20 mA analog input for remote speed signal from EMCS;
3. Digital output for communication of a VFD alarm condition to the EMCS;
4. 4-20 mA analog output for communication of the VFD output frequency to the EMCS;

G. VFD speed control shall allow a maximum 1% drift of set frequency in 24 hours with 40°C ambient temperature. No feedback device (e.g., tachometer) will be required to obtain the specified speed regulation.

H. The VFD shall be capable of supplying NEMA full load torque and accelerating torque for the size motor and load as indicated on the drawings.

I. VFD Processor shall provide password protection to prevent parameter change by unauthorized personnel, or accessible controller functions shall be behind a lockable door.

J. The controller shall include power conversion components, power control logic devices, and regulator circuitry. The regulator shall provide full digital control of frequency and voltage.

K. In all installations, VFD's shall be mounted in a manner to provide protection from the elements and to dissipate the heat generated by the controller, within the limits of the specified environmental conditions, per the manufacturer's instructions.

L. VFD shall be sized as required by the scheduled motors.

M. VFD shall include filters to eliminate radio frequency interference.

N. The drive shall be UL 508 listed and labeled.

O. The drive shall be selected to have sufficient capacity to provide speed control of the motor throughout the operating range.

P. The drive controller shall be rated for 110% continuous current.

Q. For Maintenance purposes, the VFD shall be capable of starting, stopping, and running the drive motor with stable operation throughout the frequency and voltage range without any load applied.

R. The VFD shall be capable of withstanding a three-phase, short-circuit fault at its output terminals without damage to power and control circuits until the fault is cleared. The short-circuit rating shall be based on the maximum rms fault current at the VFD, as specified.

S. Provide solid state ground fault protection. Electronic motor overload protection shall be provided which shall protect both the motor and drive at all frequencies. The VFD shall sense the load and speed and shall recalibrate the thermal trip curve to insure low speed motor protection. The initial trip-point shall be adjustable from at least 40-100% of the VFD amperage rating.

T. Signal follower shall accept 4-20 mA inputs.

U. Speed Search Transfer: The VFD shall be able to start from bypass or fault trip into a spinning load without stopping the motor or creating a fault condition. The VFD shall match motor speed and then drive motor to its proper speed.

V. Provide a EMCS control system interface as part of the VFD that will connect to a VFD communication network. Provide a connection (port) at each VFD for future network connection that will enable the user to set any of the following operational parameters:

1. Summary alarm.
2. Temperature of the VFD and heat sink.
3. Capability to read and set the minimum and maximum frequency from the central EMCS system CRT.
4. Indication of the frequency that the drive is operating.
5. Indication of the current and KW the drive is currently using.
6. Failure to start after five consecutive restart attempts.

W. The VFD’s shall have keypad equivalent of H-O-A switch and speed potentiometer.

X. The drive efficiency shall be 97% and the functional power factor shall be 0.96 at all speeds and loads.

Y. The VFD's shall have an integral disconnect switch provided with the drive.

Z. The VFD’s shall have a NEMA Type 12 enclosure.

2.03 PROTECTION

A. The VFD protection functions are to include, but are not limited to, the following:

1. Overcurrent
2. Short circuit
3. Undervoltage
4. Overvoltage
5. Overtemperature
6. Power semiconductor protection
7. Ground fault

2.04 DRIVE DIAGNOSTICS

A. The VFD diagnostics shall include, but are not limited to, the following:

1. Overcurrent

2. Ground fault
3. Undervoltage
4. Overvoltage
5. Overtemperature
6. Semiconductor fault
7. Power on
8. Motor overload

2.05 DRIVE PARAMETER ADJUSTMENT

A. The following adjustments are to be provided, as a minimum:

1. Minimum speed (frequency 0-40 Hz)
2. Maximum speed (frequency 40-250 Hz)
3. Acceleration rate (1 to 999 seconds for 0-60 Hz)
4. Deceleration rate (1 to 999 seconds for 60-0 Hz)
5. Adjustable DC boost (IR compensation)

2.06 DRIVE PARAMETER MONITORING

A. Drive-mounted digital display shall be provided for viewing the following values:

1. Drive output current
2. Drive output frequency
3. Drive output voltage
4. Drive output power
5. All fault conditions
6. 4 digit LED coded display
7. All drive operating and programming parameters

2.07 MISCELLANEOUS REQUIREMENTS

A. Control and power wiring shall be distinguishable and separate per NEC Article 725. Low voltage analog and digital control circuits shall be properly shielded or routed separately, so the power circuit does not induce error.

B. Provisions shall be made for connection of the main power cable. Lugs or terminations suitable for use with the cable size specified shall be provided. Proper bending space shall be supplied for incoming and outgoing power cables per NEC Article 373.

C. Control wiring shall be suitable for the temperature, voltage, and condition of service. Conductors for panel wiring shall be no smaller than #18 AWG. All conductors shall be of annealed copper. No aluminum wiring shall be used.

D. Wiring entering or leaving the VFD enclosure shall terminate on readily accessible terminal blocks supplied by the manufacturer. Terminals on the terminal blocks shall be labeled and shall correspond with drawings and wire markers. Terminals for power circuits shall be grouped separately from control circuits. Terminals of relays, switches, meters or other devices mounted on hinged panels or doors shall be insulated or protected to prevent accidental contact when panel or door is opened.

E. Adequate space for wire shall be provided for connection of field wiring from conduit entry location of terminal blocks. Wire routing shall avoid sharp edges, burs and moving parts.

F. All internal wiring shall be labeled with permanent-type wire markers for ease of identification and shall correspond with Vendor prints. Vendor prints shall have wiring clearly labeled with the corresponding wire marker identification.

2.08 NAMEPLATES

A. Factory-install engraved plastic laminated nameplate per each VFD shall be provided. Nameplates shall be white with black letters matching nomenclature and numbering as shown per drawings. Nameplates shall be sized to accommodate 6 mm high lettering. Lastly, nameplates shall be securely attached to each VFD by use of two stainless steel round head screws per each nameplate.

PART 3 EXECUTION

3.01 INSTALLATION

A. All drives required shall be furnished by the Division 15 contractor and installed by the Division 16 contractor unless otherwise indicated in the equipment schedule.

B. The Division 16 contractor shall be responsible for mounting the drives as shown on the electrical location plans and provide conduit wiring and terminations for power, only.

C. The Division 15 controls contractor shall provide all conduit, wire and terminations for all controls as shown on HVAC controls diagrams as part of the Division 15 construction documents. For further details of EMCS contractor scope of work refer to Section 15970 - Controls.

D. VFD's shall be mounted in accordance with all applicable NEC requirements specifically with regard to adequate working clearances.

3.02 START-UP SERVICE

A. The supplier of the AC drive described herein, shall have a factory trained service representative in domestic residence within 120 miles (average) of the job site. The factory representative shall be trained in the maintenance and troubleshooting of the equipment as specified herein. Start-up service is to be at a per diem rate with an estimate of time required for commissioning submitted to SDR prior to start-up.

3.03 MANUFACTURER'S FIELD SERVICES

A. Verify all installation connections, and controls.

B. Protect from unauthorized use during construction.

C. Adjust all safety controls.

D. Adjust acceleration and deceleration ramps, volts-to-Hertz characteristic and motor speed limits.

E. Demonstrate satisfactory operation of VFD including manual operation of 0.1-110% speed via keypad during test run.

F. Make available 24-hour on call phone contact for emergency service.

3.04 TRAINING

A. The AC drive manufacturer will, in coordination with all manufacturers of equipment listed in Part 1.02, provide an on-site or factory training program for Sandia personnel. The program shall provide operating and instruction manuals, training in equipment operation, and troubleshooting of the AC drive.

3.05 OPERATING MANUALS

A. Submit in accordance with Division 1, Section 01300.

B. Three (3) copies of the Instruction Manual shall be provided with the drives at the time of shipment for each size VFD.

END OF SECTION

SECTION 15190

MECHANICAL IDENTIFICATION

PART 1 GENERAL

1.01 RELATED DOCUMENTS

A. Drawings and general provisions of Contract, including General and Supplementary Conditions and Division 1 Specification sections, apply to work of this section as if repeated herein.

1.02 DESCRIPTION

A. Scope of Work: Work in this section shall include all ductwork, piping and equipment identification as specified herein.

B. ANSI Compliance: Comply with ANSI A13.1 for lettering size, length of color field, colors, and installed viewing angles of identification devices.

C. Schedules: Submit valve schedule for each piping system, typewritten and reproduced on 8-1/2" x 11" bond paper. Tabulate valve number, piping system, system abbreviation (as shown on tag), location of valve (room or space), and variations for identification (if any). Mark valves which are intended for emergency shut-off and similar special uses, by special "flags", in margin of schedule.

PART 2 PRODUCTS

2.01 PRODUCTS

A. Manufacturers: Allen Systems; W.H. Brady; Industrial Safety Supply; or Seton Name Plate.

B. Plastic Pipe Markers, Snap-On Type: Provide manufacturer's standard pre-printed, semi-rigid snap-on, color-coded pipe markers, complying with ANSI A13.1.

C. Plastic Pipe Markers, Pressure-Sensitive Type: Provide manufacturer's standard pre-printed, permanent adhesive, color- coded, pressure-sensitive vinyl pipe markers, complying with ANSI A13.1.

1. Small Pipes: For external diameters less than 150 mm *(6")* (including insulation if any), provide full-band pipe markers, extending 360 degrees around pipe at each location, fastened by one of the following methods:

a. Snap-on application of pre-tensioned semi-rigid plastic pipe marker.

b. Adhesive lap joint in pipe marker overlap.
c. Laminated or bonded application of pipe marker to pipe (or insulation).
d. Taped to pipe (or insulation) with color-coded plastic adhesive tape, not less than 20 mm *(3/4")* wide; full circle at both ends of pipe marker, tape lapped 40 mm *(1-1/2")*.

2. Large Pipes: For external diameters of 150 mm *(6")* and larger (including insulation if any), provide either full-band or strip-type pipe markers, but not narrower than 3 times letter height (and of required length), fastened by one of the following methods:

a. Laminated or bonded application of pipe marker to pipe (or insulation).
b. Taped to pipe (or insulation) with color-coded plastic adhesive tape, not less than 40 mm *(1-1/2")* wide; full circle at both ends of pipe marker, tape lapped 80 mm *(3")*.
c. Strapped-to-pipe (or insulation) application of semi-rigid type, with manufacturer's standard stainless steel bands.

3. Lettering: Manufacturer's standard pre-printed nomenclature which best describes piping system in each instance, as selected by Architect/Engineer in cases of variance with names as shown or specified.

a. Arrows: Print each pipe marker with arrows indicating direction of flow, either integrally with piping system service lettering (to accommodate both directions), or as separate unit of plastic.

D. Plastic Tape: Manufacturer's standard color-coded pressure- sensitive (self-adhesive) vinyl tape, not less than 3 mils thick.

1. Width: Provide 40 mm *(1-1/2")* wide tape markers on pipes with outside diameters (including insulation, if any) of less than 150 mm *(6")*, 65 mm *(2-1/2")* wide tape for larger pipes.

E. Underground-Type Plastic Line Marker: Manufacturer's standard permanent, bright-colored, continuous-printed plastic tape, intended for direct-burial service; not less than 150 mm *(6")* wide x 4 mils thick. Provide tape with printing which most accurately indicates type of service of buried pipe.

1. Provide multi-ply tape consisting of solid aluminum foil core between 2-layers of plastic tape.

F. Brass Valve and Actuator Tags: Provide 1.2 mm *(19-ga)* polished brass valve tags with stamp-engraved piping system abbreviation in 10 mm *(1/4")* high letters and sequenced valve numbers 15 mm *(1/2")* high, and with 4 mm *(5/32")* hole for fastener.

1. Provide 40 mm *(1-1/2")* diameter tags, except as otherwise indicated.

2. Fill tag engraving with black enamel.

G. Valve and Actuator Tag Fasteners: Provide manufacturer's standard solid brass chain (wire link or beaded type), or solid brass S-hooks of sizes required for proper attachment of tags to valves, and manufactured specifically for that purpose.

H. Engraved Plastic-Laminate Signs: Provide engraving stock melamine plastic laminate, complying with FS L-P-387, in sizes and thickness' indicated, engraved with engraver's standard letter style of sizes and wording indicated, black with white core (letter color) except as otherwise indicated, punched for mechanical fastening except where adhesive mounting is necessary because of substrate.

1. Thickness: 1.5 mm *(1/16")* for units up to 50 mm sq. *(20 sq. in.)* or 200 mm *(8")* length; 5 mm *(1/8")* for larger units.

2. Fasteners: Self-tapping stainless steel screws, except contact-type permanent adhesive where screws cannot or should not penetrate substrate.

I. Plasticized Tags: Manufacturer's standard pre-printed or partially pre-printed accident-prevention tags, of plasticized card stock with matt finish suitable for writing, approximately 80 mm x 143 mm *(3 x 5-5/8")*, with brass grommets and wire fasteners, and with appropriate pre-printed wording including large-size primary wording (as examples; DANGER, CAUTION, DO NOT OPERATE).

J. Lettering and Graphics: Coordinate names, abbreviations and other designations used in mechanical identification work, with corresponding designations shown, specified or scheduled. Provide numbers, lettering and wording as indicated or, if not otherwise indicated, as recommended by manufacturers or as required for proper identification and operation/maintenance of mechanical systems and equipment.

PART 3 EXECUTION

3.01 INSTALLATION

A. Coordination: Where identification is to be applied to surfaces which require insulation, painting or other covering or finish, including valve tags in finished mechanical spaces, install identification after completion of covering and painting. Install identification prior to installation of acoustical ceilings and similar removable concealment.

B. Ductwork Identification: Identify air supply, return, exhaust, intake and relief ductwork with stenciled or plastic-laminate signs and arrows, showing ductwork service and direction of flow, in black or white (whichever provides most contrast with ductwork color).

1. Location: In each space where ductwork is exposed, locate signs near points where ductwork originates or continues into concealed enclosures (shaft, underground or similar concealment), and at 15 m *(50')* spacings along exposed runs.
2. Access Doors: Provide stenciled or plastic-laminate type signs on each access door in ductwork and housings, indicating purpose of access (to what equipment) and other maintenance and operating instructions, and appropriate safety and procedural information.

C. Piping Identification: Install pipe markers on each system, and include arrows to show normal direction of flow:

D. Locate pipe markers and color bands as follows wherever piping is exposed to view in occupied spaces, machine rooms, accessible maintenance spaces (shafts, tunnels, plenums) and exterior non-concealed locations.

1. Near each valve and control device.

2. Near each branch, excluding short take-offs for fixtures and terminal units; mark each pipe at branch, where there could be question of flow pattern.

3. Near locations where pipes pass through walls or floors/ ceilings, or enter non-accessible enclosures.

4. At access doors, manholes and similar access points which permit view of concealed piping.

5. Near major equipment items and other points of origination and termination.

6. Spaced intermediately at maximum spacing of 15 m *(50')* along each piping run, except reduce spacing to 7.5 m *(25')* in congested areas of piping and equipment.

E. Underground Piping Identification: During back-filling/top-soiling of each exterior underground piping systems, install continuous underground-type plastic line marker, located directly over buried line at approximately 300mm *(12")* above the pipe. Where multiple small lines are buried in common trench and do not exceed overall width of 405 mm *(16")*, install single line marker.

F. Valve and Actuator Identification: Provide valve tag on every valve, actuator, cock and control device in each piping system; exclude check valves, valves within factory-fabricated equipment units, plumbing fixture faucets, convenience and lawn-watering hose bibs, and shutoff valves at plumbing fixtures, HVAC terminal devices and similar rough-in connections of end-use fixtures and units. List each tagged valve in valve schedule for each piping system.

G. Mechanical Equipment Identification: Install engraved plastic laminate sign or plastic equipment marker on or near each major item of mechanical equipment and each operation device. Provide signs for the following general categories of equipment and operational devices:

1. *Main control and operating valves, including safety devices.*
2. *Gages, thermostats, thermometers and similar units.*
3. *Compressor and dryer.*
4. *Strainers and filters.*
5. *Exhaust fans.*
6. *Reheat coils.*
7. *Pumps*
8. *Air control valves*
9. *Control panels*
10. *Mac panels*
11. *Lanstar*
12. *AHU's*
13. *Supply fans*
14. *Control dampers*
15. *Chillers*
16. *Tanks*
17. *Air separators*

END OF SECTION

SECTION 15195

LABORATORY AND SPECIAL EQUIPMENT
(ROUGH-IN AND CONNECT)

PART 1 - GENERAL

1.01 RELATED DOCUMENTS

A. Drawings and general provisions of Contract, including General and Supplementary Conditions and Division 1 Specification sections, apply to work of this section as if repeated herein.

1.02 DESCRIPTION

A. The extent of the laboratory and special equipment rough-in and connect requirements is indicated on the drawings, details, schedules and as required by this section.

PART 2 - PRODUCTS

2.01 MATERIALS

A. Pipe and Fittings: See Sections 15494 and 15493.

B. Supports and Anchors: See Section 15140

C. Valves: See Section 15100 and special valve requirements in applicable sections of the specifications.

D. Fumehoods: See Section 11610.

E. Laboratory Casework: See Section 12345.

PART 3 - EXECUTION

3.01 LABORATORY AND SPECIAL EQUIPMENT FURNISHED BY OTHERS

A. The Contractor shall provide all necessary material and perform all labor to rough-in and connect natural gas, other gases, hot water, cold water, waste, air lines, and ducts as required to serve sinks, laboratories, fume hoods, laboratory equipment, laboratory furniture including piping within casework, equipment, fume hoods, in service turrets or tunnels through, under, or along the backs of working surfaces and in reagent racks above counter tops, services to washers, etc, that are furnished by others. Provide shutoff valve in each line for isolating of

items for repair and maintenance. When equipment is not delivered prior to final acceptance of the systems, the valved branch lines shall be capped or plugged at walls or floors as directed and left ready for future connection within five feet of proposed equipment location.

B. Equipment suppliers shall furnish to the Contractor all trim, and mounting hardware down to and including tailpieces. Special traps will be furnished by equipment supplier when indicated. The Contractor shall receive and install the trim items and furnish traps and piping materials compatible with the appropriate system. Equipment supplier shall be responsible for setting of equipment.

C. Sizing of lines and wastes shall conform to applicable codes and the installation shall conform to the highest workmanship standards of the trades involved.

D. The Contractor shall examine the specifications and drawings pertaining to laboratory and special equipment furnished by others. The Contractor shall coordinate this work with all other trades so that the installation of all work shall make a complete and finished job meeting the approval of the Sandia Delegated Representative.

3.02 TESTING

A. See testing procedure in Section 15494, "LABORATORY SUPPLY SYSTEM".

END OF SECTION

SECTION 15200

SEISMIC PROTECTION FOR
MECHANICAL SYSTEMS

PART 1 - GENERAL

1.01 RELATED DOCUMENTS

A. Drawings and general provisions of Contract, including General and Supplementary Conditions and Division 1 Specification sections, apply to work of this section as if repeated herein.

1.02 DESCRIPTIONS

A. Seismic protection shall be in accordance with SMACNA guidelines for Seismic and as specified herein.

B. The requirements for seismic protection measures to be applied to mechanical equipment and systems specified herein are in addition to any other items called for in other sections of the specifications.

1. Mechanical Equipment: Mechanical/electrical equipment shall include the following items:

a. Boilers
b. Storage Tanks for Oil and Water
c. Water Heaters
d. Water, Oil and Gas Piping
e. Expansion Tanks
f. Drain, Waste and Vent Piping
h. Heat Exchangers
i. Water Chiller Units
j. Cooling Towers
k. Air and Refrigerant Compressors
l. Control Panels
m. Air Handling Units
n. Pumps with Motors
o. Computer Room AHU's (Floor and Ceiling)
p. Air Distribution Equipment

2. Mechanical Systems: Mechanical systems shall include the following items:

a. Heating Water Distribution System
b. Chilled Water Distribution Systems
c. Gas Distribution Systems

d. Fuel Oil Piping
e. Water Supply Systems
f. Sanitary Sewer Systems
g. Process Piping
h. Air Distribution systems

3. This facility is located in Seismic Zone 4.

4. Exclusion: Seismic protection of water pipes for fire protection systems will be installed in strict accordance with the provisions of NFPA 13 and Appendix A thereto as specified in SECTION 15330*(15331)*: "AUTOMATIC FIRE SPRINKLER SYSTEM".

1.03 SUBMITTALS

A. Submit shop drawings, calculations catalog cuts, templates, and erection and installation details, as appropriate, for the items listed below. Submittals shall be complete in detail; shall indicate thickness, type, grade, class of metal, and dimensions; and shall show construction details, reinforcement, anchorage, and installation with relation to the building construction.

1. Sway Braces
2. Resilient Type Vibration Devices
3. Anchor Bolts
4. Equipment Bracing

PART 2 - PRODUCTS

2.01 MATERIALS AND EQUIPMENT

A. Materials and equipment shall conform to the respective specifications and other requirements specified below:

1. Bolts and Nuts: Squarehead bolts and heavy hexagon nuts, ANSI B18.2.1 and B18.2.2, and ASTM A 307 or A 576. Bolts, underground, ASTM A 325.

2. Sway Brace: Material shall be structural steel conforming with ASTM A 36. Steel pipes shall conform to ASTM A 501. All sheet metal used for bracing shall have a minimum yield strength of 33,000 psi.

PART 3 - EXECUTION

3.01 SWAY BRACES

A. General: Sway Braces shall be installed on piping and duct not otherwise rigidly anchored to preclude damage during seismic activity. Bracing shall conform to the drawings and specifications. Provisions of this paragraph apply to all piping specified in Division 15 unless buried in the ground. Piping grouped for support on trapeze-type hangers shall be braced at the same intervals as determined by the smallest diameter pipe of the group. Hanger rods shall be increased in cross-sectional area proportionate to the increased weight per linear foot of pipe and contents supported at each trapeze hanger. Bracing rigidly attached to pipe flanges, or similar, shall not be used where it would interfere with thermal expansion of piping.

1. Details shown provide a lateral bracing system. A typical vertical support system must also be used. However, where bracing occurs, the vertical angle shown may replace a typical vertical support. This includes a trapeze vertical supporting system.

B. Sway Braces for Piping:

1. Vertical Runs: Vertical runs of piping shall be laterally braced at not more than 3 m *(10-foot)* vertical intervals. For tubing 25 mm *(1")* and smaller, bracing shall be provided at no more than 1.8 m *(6-foot)* spacing.

2. Clamps: Clamps on uninsulated pipes shall be applied directly to pipe. Insulated piping shall have clamps applied over insulation vapor barrier with high-density inserts and metal protection shields under each clamp.

3. Spreaders shall be provided between racked or adjacent piping runs to prevent contact during seismic activity whenever pipe or insulated pipe surfaces are less than 100 mm *(4 inches)* apart or four times the maximum displacement due to seismic force. Spreaders to be applied at same interval as sway braces. Spreaders shall be applied to surface of bare or insulated hot pipe and over insulation utilizing high-density inserts and pipe protection shields where vapor-barrier-type insulation is employed.

4. Bracing details, support details, schedules and notes apply to all types of pipe and all types of joints.

5. Brace all pipes 65 mm *(2 1/2")* diameter and larger:

6. Exceptions:

a. Brace all fuel gas and oil piping, laboratory gas piping and compressed air piping 25 mm *(1")* and larger.

b. Seismic braces may be omitted: (1) when the top of the pipe is suspended 305 mm *(12")* or less from the supporting structure member and the pipe is suspended by an individual hanger. (2) on all piping 20 mm *(3/4")* and smaller.

7. For threaded piping the flexibility may be provided by the installation of swing joints. In welded or solder joint piping the flexibility shall be provided by expansion loops or manufactured flexible connectors. For piping with manufactured ball joints select length of piping offset using "Seismic Drift" in place of "Expansion Per Joint Manufacturer" selection table. Seismic Drift = 4.6 mm per mm of height *(0.015 ft. per foot of height)*.

8. Do not use branch lines to brace main lines.

9. Trapeze hangers may be used. Provide flexibility in joints where pipes pass through building seismic or expansion joints, or where rigidly supported pipes connect to equipment with vibration isolators.

10. A rigid piping system shall not be braced to dissimilar parts of a building or two dissimilar building systems that may respond in a different mode during an earthquake. Examples: Wall and a roof; solid concrete wall and a metal deck with lightweight concrete fill.

11. Cast iron pipe of all types, high silicon cast iron pipe and any other pipe joined with a shield and clamp assembly where the top of the pipe is 305 mm*(12")* or more from supporting structure shall be braced on each side of a change in direction of 90° or more.

12. For gas piping, the bracing details, schedules and notes may be used except that transverse bracing shall be at 6 m *(20' - 0")* o.c. maximum and longitudinal bracing at 12 m*(40' - 0")* o.c. maximum. Also 25 mm *(1")*, 32 mm *(1-1/4")*, 40 mm *(1-1/2")*, and 50mm *(2")* diameter pipes shall be braced the same as 65 mm *(2 1/2")* diameter pipe in the schedule. (No bracing is required for piped 20 mm *(3/4")* diameter and smaller).

13. Proprietary bracing systems may be submitted for substitution shown in the details. The submittal shall include details and calculations stamped by a structural engineer registered in the State of California.

C. Sway Braces for Ducts:

1. Transverse Sway Bracing: Transverse sway bracing shall be provided at each horizontal turn of 45 degrees or more, at the end of each duct run and otherwise at each 10 m *(30-foot)* interval. Walls which ducts penetrate may be considered transverse braces.

2. Longitudinal Sway Bracing: Longitudinal sway bracing shall be provided at 20 m *(60-foot)* intervals. Transverse bracing for one duct section may also act as longitudinal bracing for a duct section connected perpendicular to it, if the bracing is installed within 1.2 m *(4 feet)* of the intersection, and it is sized for the larger duct.

3. Bracing Angles: Bracing angles for rectangular ducts shall be in accordance with schedule on drawings.

4. Brace all rectangular ducts 2 m sq. *(6 sq. ft.)* of area and larger. Brace all round ducts 715 mm *(28")* in diameter and larger.

5. No bracing is required if the top of duct is suspended 300 mm *(12")* or less from the supporting structural member and attached to top of duct.

6. A group of ducts may be combined in a larger size frame using the overall dimensions with maximum weight for selection of the members.

7. Walls (including gyp-board non-bearing partitions) which have ducts running through them may replace a typical transverse brace. Provide solid blockings around duct penetration at stud wall construction.

8. Ducts and pipes not braced shall be installed with a 150 mm *(6")* minimum clearance to vertical ceiling hanger wires.

D. ANCHOR BOLTS: All rigidly mounted equipment will have a minimum of four anchor bolts securely fastened through bases. Anchor bolts must conform to ASTM A 307. Anchor bolts shall have an embedded straight length equal to at least ten times the nominal diameter of the bolt and shall conform to Table I for various equipment weights.

TABLE I
MINIMUM ANCHOR BOLT SIZES FOR EQUIPMENT ANCHORS **

Maximum Equipment Weight *(Pounds)*	Minimum Bolt Sizes *(Inches)**
225 kg*(500)*	15 mm*(1/2)*
450 kg*(1,000)*	15 mm*(1/2)*
2265 kg*(5,000)*	15 mm*(1/2)*
4535 kg*(10,000)*	16 mm*(5/8)*
9070 kg*(20,000)*	16 mm*(5/8)*
13,605 kg*(30,000)*	20 mm*(3/4)*
22,680 kg*(50,000)*	25 mm*(1)*
45,360 kg*(100,000)*	40 mm*(1-1/2)*

* Based on four bolts per item, use equivalent total cross-sectional areas when more than four bolts per item are provided. Anchor bolts that exceed normal depth of equipment foundation piers or pads shall either extend into concrete floor or the foundation shall be increased in depth to accommodate bolt lengths.
** Refer to drawings for anchor bolt schedule of major equipment. This table (TABLE I) shall be used for all other equipment. The contractor shall submit details and calculations for the overturning restraints on any equipment having a height-to-width ratio which exceeds 3.3.

E. Resilient Vibration Isolation Devices: Selection of anchor bolts for vibration isolation devices and/or snubbers to equipment base and foundations shall follow the same procedure as in paragraph D, ANCHOR BOLTS, except that an equipment weight equal to five times the actual equipment weight shall be used.

1. Resilient and Spring-Type Vibration Devices: Vibration isolation devices shall be selected so that the maximum movement of equipment from the static deflection point shall be 0.5 inches. Also refer to Section: 15240, "MECHANICAL SOUND AND VIBRATION CONTROL".

2. Multidirectional Seismic Snubbers: Multidirectional seismic snubbers employing elastomeric pads shall be installed on all floor- or slab-mounted equipment. These snubbers shall provide 10 mm *(0.25-inches)* free vertical and horizontal movement from the static deflection point. Snubber medium shall consist of multiple pads of cotton duct and neoprene or othersuitable materials arranged around a flanged steel trunnion so both horizontal and vertical forces are resisted by the snubber medium. Also refer to Section: 15240, "MECHANICAL SOUND AND VIBRATION CONTROL".

F. Equipment sway bracing shall be provided for all items supported from overhead floor or roof structures. Braces shall consist of angles, rods, bars, or pipes run at a 45-degree angle from the equipment frame to the building structure secured at both ends with not less than 15 mm *(1/2-inch)* bolts. Braces shall conform to Table II. Bracing shall be provided in two planes of directions, 90 degrees apart, for each item of equipment. Sufficient braces shall be provided for equipment to resist a horizontal force equal to 150 percent of the weight of equipment without exceeding safe working stress of bracing components. Details of all equipment bracing shall be submitted for approval. In lieu of bracing with vertical supports, these items may be supported with hangers inclined at 45 degrees, provided that supporting members are properly sized to support operating weight of equipment when inclined at a 45-degree angle.

1. Mechanical equipment anchorages such as bolts, expansion anchors, screws, etc., shall comply with the force level requirements of Seismic Zone 4.

2. Restraining devices shall be designed to conform with the force level requirements noted above. The following companies have met these requirements. The names are listed for convenience only with no intention of excluding other companies.

   a. California Dynamics Corporation
   b. Mason Industries, Inc.
   c. M.W. Sausse and Company, Inc.

3. Restraining devices must be placed on all sides of the equipment base.

4. It is the entire responsibility of the equipment manufacturer to design his equipment so that the strength and anchorage of the internal components of the equipment exceeds the force level used to restrain and anchor the unit itself to the supporting structure.

TABLE II
MAXIMUM LENGTH FOR ANCHOR BRACES

Type	Size(mm)	Allowable Loads* Maximum Length(mm)*	(kpa)
Angles	40 x 40 x 6.4	1473	39,300
	50 x 50 x 6.4	1981	53,779
	65 x 65 x 6.4	2438	67,568
	80 x 65 x 6.4	2692	74,463
	80 x 80 x 6.4	2997	82,047
Rods	20	939	25,510
	22	1117	34,473
Flat Bars	40 x 6.4	355	21,3733
	50 x 6.4	355	28,268
	50 x 9.5	533	42,747
Pipes (40s)	25	2134	28,268
	32	2743	37,921
	40	3150	45,505
	50	3988	61,363

*Based on the slenderness ratio of 1/r = 200 and ASTM A 36 steel.

TABLE II
MAXIMUM LENGTH FOR ANCHOR BRACES

*Allowable Loads**

Type	*Size*	*Maximum Length**	*(kips)*
Angles	*1-1/2" x 1-1/2" x 1/4"*	*4'-10"*	*5.7*
	2" x 2" x 1/4"	*6'-6"*	*7.8*
	2-1/2" x 1-1/2" x 1/4"	*8'-0"*	*9.8*
	3" x 2-1/2" x 1/4"	*8'-10"*	*10.8*
	3" x 3" x 1/4"	*9'-10"*	*11.9*
Rods	*3/4"*	*3'-1"*	*3.7*
	7/8"	*3'-8"*	*5.0*
Flat Bars	*1-1/2" x 1/4"*	*1'-2"*	*3.1*
	2" x 1/4"	*1'-2"*	*4.1*
	2" x 3/8"	*1'-9"*	*6.2*
Pipes (40S)	*1"*	*7'-0"*	*4.1*
	1-1/4"	*9'-0"*	*5.5*
	1-1/2"	*10'-4"*	*6.6*
	2"	*13'-1"*	*8.9*

**Based on the slenderness ratio of 1/r = 200 and ASTM A 36 steel.*

H. Miscellaneous Equipment: The following specific items of equipment to be furnished under this contract shall be constructed and assembled so as to be capable of withstanding the horizontal equivalent static force of 0.30 times the operating weight of the equipment, at vertical center of gravity of the equipment without causing permanent deformation, dislocations, separation of components, or other damage, which would render the equipment inoperative for significant periods of time following an earthquake:

1. *Water Heaters Transformers*
2. *Boilers*
3. *Chillers*
4. *Air-Handling Units*
5. *Cooling Towers*

END OF SECTION

SECTION 15240

MECHANICAL SOUND AND VIBRATION CONTROL

PART 1 - GENERAL

1.01 RELATED DOCUMENTS

A. Drawings and general provisions of Contract, including General and Supplementary Conditions and Division 1 Specification sections, apply to work of this section as if repeated herein.

1.02 DESCRIPTION

A. All items of equipment, whether suspended, floor-mounted or otherwise supported, which are capable of producing vibration, shall be installed with vibration isolation in accordance with these specifications and the recommendations of the isolation equipment manufacturer and as accepted by the Sandia Delegated Representative. *In some cases the drawings and schedules call for specific types of vibration isolating devices to be used.*

B. All isolators and isolation materials shall be of the same manufacture and shall be selected and certified, using published or factory-certified data, that all such isolators or isolation materials comply with these specifications. Any variance or noncompliance with these specification requirements shall be corrected by the Contractor in an approved manner and retested.

C. The Contractor and manufacturer of isolation equipment shall refer to drawings and details.

D. The Contractor and manufacturers shall coordinate the requirements of this section; Section 15140 "SUPPORTS AND ANCHORS"; and Section 15200 "SEISMIC PROTECTION FOR MECHANICAL SYSTEMS"; as applicable.

E. All mechanical equipment located within lab areas shall be mounted and supported such that less than 5 percent of the total vibration generated at frequencies from 1 to 10,000 Hz by the device is transmitted to the building floor or structure. The Contractor shall submit for approval data showing disturbing frequency (lowest RPM of rotating equipment), supported weight, static deflection or natural frequency, and calculations supporting same for each isolator he proposes to use.

F. Manufacturers:

1. Mason Industries, Inc.
2. Peabody Kinetics

3. Vibration Mountings and Controls, Inc.
4 Korfund Dynamics Co.

G. Types indicated in specification are Mason Industries Inc.

H. In addition to the general isolation efficiency described above, the following mechanical equipment shall have, as a minimum, the requirements specified herein.

1. Centrifugal fans, with 56 kw *(75 horsepower)* or greater motors, shall have Specification Type J inertia base and Specification Type B isolators with a minimum of 114 mm *(4.5 inch)* deflection and the movement on the top of the isolators shall be no more than 25 mils/sec RMS half-peak or 50 mils/sec RMS peak-to-peak. At the bearings, the movement shall be no more than 1.0 mils peak-to-peak.

2. Centrifugal fans, with motor greater than or equal to 29 kw *(40 horsepower)*, but less than 56 kw *(75 horsepower)*, shall have Specification Type J inertia base and Specification Type B isolators with a minimum of 89 mm *(3.5 inch)* deflection and the movement on the top of the isolators shall be no more than 50 mils/sec RMS half-peak or 100 mils/sec RMS peak-to-peak. At the bearings, the movement shall be no more than 1.0 mils peak-to-peak.

3. Axial Fans, with motor horsepower greater than or equal to 29 kw *(40)*, shall have Specification Type MT air springs and Specification Type J inertia base with a minimum twelve inch thick concrete fill. At the bearings, the movement shall be no more than 0.5 mils peak-to-peak.

4. Boilers shall have a minimum of two 25 mm *(one-inch)* thick layers of bridge bearing Specification Type AA isolator pad with steel plate.

5. Screw Air Compressors shall have Specification Type MT air springs and Specification Type K inertia base with a minimum thickness that has a weight equal to three times that of the air compressor.

6. Pumps shall have Specification Type K flexible connectors, Specification Type J inertia base and Specification Type B isolators with minimum deflection as follows:

2.2 to 3.7 kw*(3 to 5 HP)*	20 mm*(3/4")* Minimum Deflection
5.6 to 11.2 kw*(7.5 to 15 HP)*	40 mm*(1")* Minimum Deflection
14.9 to 29.8 kw*(20 to 40 HP)*	45 mm*(1-3/4")* Minimum Deflection
37.3 to 55.9 kw*(50 to 75 HP)*	65 mm*(2-1/2")* Minimum Deflection

7. Piping from pumps shall incorporate Specification Type D hangers with 25mm*(one-inch)* minimum deflection as follows:

PIPE SIZE	HANGER LOCATION
50 to 100 mm*(2" to 4")*	First 30 m*(100 Feet)*
125 to 150 mm*(5" to 6")*	First 60 m*(200 Feet)*
200 to 410 mm*(8" to 16")*	First 120 m*(400 Feet)*

8. *Vibration Isolation system for engine inertia pad:*

   a. *Vibration isolation, pneumatic isolators, similar to 3 Model 1206-4800-8A and 5 Model 1206-4800-8S vibraplane active-air mounts. Mounts shall be located, as minimum, 6 inches from edge of inertia pad, and 4 isolators equally spaced along each long side .*

   b. *Inertia pad is designed on Structural Drawings. Isolators must have sufficient capacity to support weight of 38,400 lbs and meet the following requirements:*

      1.) *Pad must be same height as existing floor, refer to Structural Drawings*

      2.) *No noticeable movement of pad when weight is added or removed.*

      3.) *Vibration isolators are active type and shall be provide with an 80 psi ½" compressed air line. A control panel containing the active process shall be located on the pad itself.*

      4.) *Provide automatic leveling height control system with Mechanical feedback servo valves. Valves shall bleed or feed air as needed without any movement of isolation pad.*

   c. System as manufactured by Kinetic Systems, Inc.

PART 2 - PRODUCTS

2.01 VIBRATION ISOLATORS

A. Specification AA: Neoprene Pads: Waffle pads shall be made of standard neoprene and shall consist of 50 mm *(2 inch)* square modules 20 mm *(3/4 inch)* thick, separated by a thin web. Pads shall be type Super "W".

B. Specification A: Double deflection neoprene mountings shall have a minimum static deflection of 8.9 mm *(0.35")*. All metal surfaces shall be neoprene covered to avoid corrosion and have friction pads both top and bottom so they need not be bolted to the floor. Bolt holes shall be provided where bolting is required. On equipment such as small vent sets and close coupled pumps, steel rails shall be used above the mountings to compensate for the overhang. Mountings shall be type ND or rails type RND.

C. Specification B: Spring type isolators shall be free standing and laterally stable without housing and complete with 6.4mm *(1/4")* neoprene acoustical friction pads between the baseplate and the support. Mountings shall have leveling bolts rigidly bolted to the equipment. Spring diameters shall be no less than 0.8 of the compressed height of the spring at rated load. Springs shall have a minimum additional travel to solid equal to 50% of the rated deflection. Submittals shall include spring diameters, deflections, compressed spring height and solid spring height. Mountings shall be type SLF.

D. Specification C: Equipment with operating weight different from the installed weight and equipment exposed to the wind or seismic loads shall be mounted on spring mountings as described in Specification B, but a housing shall be used that includes vertical limit stops to prevent spring extension when weight is removed or the equipment starts to turn over. Limit stops shall be out of contact during normal operations. Mountings used out-of-doors shall be hot-dipped galvanized. Mountings shall be SLR.

E. Specification D: Vibration hangers shall contain a steel spring and 7.6 mm *(0.3")* deflection neoprene element in series. The neoprene element shall be molded with a rod isolation bushing that passes through the hanger box. Spring diameters and hole sizes shall be large enough to permit the hanger rod to swing through a 30 degree arc before contacting the hole and short-circuiting the spring. Springs shall have a minimum additional travel to solid equal to 50% of the rated deflection. Hangers shall be type 30N.

F. Specification F: Vibration hangers shall contain a steel spring located in a neoprene cup manufactured with a grommet to prevent short-circuiting. The cup shall contain a steel washer designed to properly distribute the load on the neoprene and prevent its extrusion. Spring diameters and hole sizes shall be large enough to permit the hanger rod to swing through a 30 degree arc before contacting the hole and short circuiting the spring. Springs shall have a minimum additional travel to solid equal to 50% of the rated deflection. Hangers shall be provided with an eyebolt on the spring end and provision to attach the housing to the flat iron duct straps. Hangers shall be type W30.

G. Specification K: Flexible Pipe Connectors: Flexible EPDM connectors shall be used on all equipment as indicated on the drawings or on the equipment schedule. They shall be manufactured of multiple plies of frictioned nylon tire cord fabric with an EPDM cover and liner. No steel wire or rings shall be used as pressure reinforcement. Straight connectors shall have two spheres, with a center molded in external ductile iron ring to maintain the two spherical shapes. Connectors up to and including 50 mm *(2 inch)* diameter may have threaded ends. Floating flanges shall have a recess to lock the bend wire in the raised face EPDM flanges. Tapered twin sphere connectors as described above shall be used where line size changes are required in straight piping runs.

1. Flanged equipment shall be directly connected to neoprene elbows in the size range 65mm through 300mm (*2-1/2 through 12 inch)*, if the piping makes a 90 degree turn and flanges are equal sized. Long radius reducing EPDM elbows shall be used in place of steel or cast iron elbows at pump connections.

2. All twin sphere connectors shall be properly extended as recommended by the manufacturer to prevent additional elongation under pressure. Joints shall be designed for maximum elongation under pressure as follows:

PIPE SIZE	PRESSURE	ELONGATION
40 to 65 mm*(1-1/2" TO 2-1/2")*	1724 kpa*(250 PSI)*	12.7mm*(1/2")*
80 to 200mm*(3" TO 8")*	1724 kpa*(250 PSI)*	19.1 mm*(3/4")*
250 to 300 mm*(10" TO 12")*	1207 kpa*(175 PSI)*	22.2 mm*(7/8")*

3. When the pressure will cause the connector to extend beyond its rated elongation, control rods shall be employed using 15 mm*(1/2 inch)* thick bridge-bearing neoprene washer bushings designed for a maximum loading of 6895 kpa*(1000 PSI).*

4. Twin sphere connectors shall have a minimum rating of 1725 kpa at 76.7 degrees C *(250 PSI at 170 degrees F)* and 1140 kpa at 121.1 dgrees C *(165 PSI at 250 degrees F)*. Elbows and reducing twin spheres shall have a minimum pressure rating of 1520 kpa at 76.7 degrees C *(220 PSI at 170 degrees F)* and 1000 kpa at 121.1 degrees C *(145 PSI at 250 degrees F)*. Neoprene materials shall be limited to 104.4 degrees C *(220 degrees F)*. Certified safety factors shall be a nominal 4 to 1 with minimum acceptable test results of 3.6 to 1. Tests shall cover burst, flange leakage, extension without control rods and flange retention at 50% of burst pressure without control rods.

5. Submittals shall include two test reports by independent consultants showing minimum reduction of 20dB in vibration accelerations and 10dB in sound pressure levels at typical blade passage frequencies.

6. Twin sphere, reducing twin sphere and reducing elbows shall be Mason Industries type Superflex "MFTNC" or "MFTFUZ", "MFTCR", and "MFLRR". Control rods shall be type "ACR".

H Specification L: Flexible stainless steel hose shall have stainless steel braid and carbon steel fittings. Sizes 80mm(3") and larger shall be flanged. Smaller sizes shall have male nipples. Lengths shall be as tabulated:

Flanges(mm)		Male Nipples(mm)	
80 x 355	250 x 660	15 x 229	40 x 330
100 x 389	300 x 711	20 x 250	50 x 355
125 x 483	355 x 762	25 x 279	65 x 457

150 x 508 406 x 812 32 x 300
200 x 559

Flanges(inches)

3 x 14 10 x 26
4 x 15 12 x 28
5 x 19 14 x 30
6 x 20 16 x 32
8 x 22

Male Nipples(inches)

1/2 x 9 1-1/2 x 13
3/4 x 10 2 x 14
1 x 11 2-1/2 x 18
1-1/4 x 12

1. Hoses shall be installed on the equipment side of the shut-off valves horizontally and parallel to the equipment shafts wherever possible. Hoses shall be type BSS.

I. Specification M: Where piping passes through equipment walls, floors or ceilings, the vibration isolator manufacturer shall provide a split seal consisting of two bolted pipe halves with 20 mm *(3/4")* or thicker neoprene sponge bonded to the inner faces. The seal shall be tightened around the pipe to eliminate clearance between the inner sponge face and the piping. Concrete may be packed around the seal to make it integral with the floor, wall or ceiling if the seal is not already in place around the pipe prior to the construction of the building member. Seals shall project a minimum of 25 mm *(1")* past either face of the wall. Where temperatures exceed 121.1 degrees C *(250 F)*, 4.5 kg *(10#)* density fiberglass may be used in lieu of the sponge. Seals shall be type SWS.

J. Specification X: Thrust Restraints: The horizontal thrust restraint shall consist of a spring element in series with a neoprene pad as described in Isolator Type D with the same deflection as specified for the mountings or hangers. The spring element shall be preset for thrust at the factory and adjusted in the field to allow for a maximum of 6.4 mm *(1/4 inch)* movement at start and stop. The assembly shall be furnished with angle brackets for attachment to both the equipment and ductwork or the equipment and structure. Brackets shall be attached at the centerline of thrust, symmetrically on both sides of the unit. Horizontal thrust restraints shall be type WB.

K. Specification Z: Rooftop Equipment: Curb mounted rooftop equipment shall be mounted on spring isolation curbs where indicated. The lower member shall consist of a rectangular steel tube containing adjustable and removable steel springs that support the upper floating section. The lower member shall be constructed to compensate for the slope in the roof and maintain a level support for the upper member. The upper frame must provide continuous support for the equipment and must be captive so as to resiliently resist wind and seismic forces. All directional neoprene snubber bushings shall be a minimum of 6.4 mm *(1/4")* thick. Steel springs shall rest on 6.4 mm *(1/4")* neoprene acoustical pads and have a minimum deflection of 44.5 mm *(1.75")*. Hardware must be cadmium plated or

galvanized and the springs plated or provided with an approved rust-resistant finish. Weather proofing shall be provided by a continuous flexible aluminum seal joined at the corners by EPDM bellows. The aluminum seal must be nailed over and provide counterflashing to the curb's waterproofing. Provision shall be made for access ports with waterproof covers at the spring location and 50 mm *(2")* insulation on the sides of the lower curb. Curbs shall be Mason Industries, Inc. Type RSC or approved equal.

L. Specification S: Seismic Snubbers: Each spring mounted base shall have a minimum of four all-directional seismic snubbers that are double acting and located as close to the vibration isolators as possible to facilitate attachment both to the base and the structure. The snubbers shall consist of interlocking steel members restrained by shock absorbent rubber material. Elastomeric materials shall be replaceable and a minimum of 20 mm *(3/4")* thick. Snubbers shall be manufactured with an air gap between hard and resilient material of not less than 3.1mm *(1/8")* nor more than 6.4 mm *(1/4").* Snubbers shall be installed with factory set clearances. The capacity of the seismic snubber at 9.5 mm (*3/8")* deflection shall be 3 to 4 times the load assigned to the mount grouping its immediate area. Submittals shall include load deflection curves up to 12.7 mm *(1/2")* deflection in the x, y and z planes. Tests shall be conducted in an independent laboratory or under the signed supervision of an independent registered engineer. The snubber assemblies shall be bolted to the test machine as the snubber is normally installed. Test reports shall certify that neither the neoprene elements nor the snubber body sustained any obvious deformation after release of load. Snubbers shall be series Z-1125 as manufactured by Mason Industries, Inc.

1. This and any other seismic snubber device which may later be approved for use on this project shall have an approved "R" seismic rating from the State of California and conform to UBC, 88 criteria. Application and selection of seismic snubber devices shall be certified by a Registered Civil Engineer from the State of California who has been employed by the manufacturer on a full-time basis for no less than three years, (documented).

M. Specification J: Inertia Bases: Vibration isolator manufacturer shall furnish rectangular structural steel or channel concrete forms for floating foundations. Bases for split case pumps shall be large enough to provide support for suction and discharge base elbows. The base depth need not exceed 300 mm *(12 inches)* unless specifically recommended by the base manufacturer for mass or rigidity. Bases shall be a minimum of 1/12th of the longest dimension of the base, but not less than 150 mm *(6 inches)*. Height saving brackets shall be employed in all mounting locations to minimize equipment operating height. Inertia Bases shall be type KSL.

N. Specification MT: Air Springs: Double sphere shape, neoprene cover and liner, precompression chains, 6.4 mm *(1/4")* NPT air connection, and automatic air spring leveling control valve. Type MT.

O. Specification G: Vibration isolator manufacturer shall furnish integral structural steel bases. All perimeter members shall be beams with a minimum depth equal to 1/10th of the longest dimension of the base. Beam depth need not exceed 355 mm *(14")* provided that the deflection and misalignment is kept within acceptable limits. Height saving brackets shall be employed in all mounting locations to provide a base clearance of one inch. Bases shall be type WF.

PART 3 - EXECUTION

3.01 INSTALLATION

A. Except as otherwise indicated, comply with manufacturer's instructions for the installation and load application to vibration isolation materials and units. Adjust to ensure that units do not exceed rated operating deflections or bottom out under loading, and are not short-circuited by other contacts or bearing points. Remove space blocks and similar devices (if any) intended for temporary protection against overloading during installation.

B. Locate isolation hangers as near the overhead support structure as possible.

C. Adjust leveling devices as required to distribute loading uniformly onto isolators. Shim units as required where leveling devices cannot be used to distribute loading properly.

3.02 TESTING

A. Each piece of equipment shall be tested by the Test and Balance Contractor to verify that the vibration transmission is within the specified limits. These tests shall be performed in accordance with applicable portions of Chapter 52 and 57 of the 1987 ASHRAE Handbook, "HVAC Systems and Applications". Refer to Section 15990: "TESTING, ADJUSTING, AND BALANCING".

END OF SECTION

SECTION 15250

MECHANICAL INSULATION

PART 1 - GENERAL

1.01 RELATED DOCUMENTS

A. Drawings and general provisions of Contract, including General and Supplementary Conditions and Division 1 Specification sections, apply to work of this section as if repeated herein.

B. Division 15, Section 15010, "BASIC MECHANICAL REQUIREMENTS", and Section 15050, "BASIC MECHANICAL MATERIALS AND METHODS", sections apply to work of this section.

1.02 DESCRIPTION

A. Extent of mechanical insulation required by this section is indicated on drawings and schedules, and by requirements of this section.

B. Types of mechanical insulation specified in this section include the following:

1. Piping System Insulation: Fiberglass

2. Ductwork System Insulation: Fiberglass

3. Equipment Insulation: Fiberglass

C. Refer to Division 15 Section 15140, "SUPPORTS AND ANCHORS", for protection saddles, protection shields and thermal hanger shields.

D. Refer to Division 15 Section 15891, "METAL DUCTWORK", for duct linings; not work of this section.

1.03 QUALITY ASSURANCE

A. Manufacturer's Qualifications: Firms regularly engaged in manufacture of mechanical insulation products, of types and sizes required, whose products have been in satisfactory use in similar service for not less than 3 years.

B. Installer's Qualifications: Firm with at least 5 years successful installation experience on projects with mechanical insulations similar to that required for this project.

C. Flame/Smoke Ratings: Provide composite mechanical insulation (insulation, jackets, coverings, sealers, mastics and adhesives) with flame-spread index of 25

or less, and smoke-developed index of 50 or less, as tested by ASTM E 84 (NFPA 255) method.

D. Comply with Sandia requirements and local, State, and Federal Code and Regulations having jurisdiction

1.04 SUBMITTALS

A. Product Data: Submit manufacturer's technical product data and installation instructions for each type of mechanical insulation. Submit schedule showing manufacturer's product number, k-value, thickness, and furnished accessories for each mechanical system requiring insulation.

B. Maintenance Data: Submit maintenance data and replacement material lists for each type of mechanical insulation. Include this data and product data in maintenance manual.

1.05 DELIVERY, STORAGE AND HANDLING

A. Deliver insulation, coverings, cements, adhesives and coatings to site in containers with manufacturer's stamp or label, affixed showing fire hazard indexes of products.

B. Protect insulation against dirt, water and chemical and mechanical damage. Do not install damaged or wet insulation; remove from project site.

PART 2 - PRODUCTS

2.01 ACCEPTABLE MANUFACTURERS

A. Manufacturer: Subject to compliance with requirements, provide products of one of the following:

Armstrong World Industries, Inc.
Babcock & Wilcox; Insulating Products Div.
CertainTeed Corp.
Knauf Fiber Glass GmbH.
Manville Products Corp.
Owens-Corning Fiberglas Corp.
Pittsburgh Corning Corp.

2.02 PIPING INSULATION MATERIALS

A. Fiberglass Piping Insulation: ASTM C 547, Class 1 for use to 230°C *(450 degrees F)*, unless otherwise indicated.

B. Jackets for Piping Insulation: ASTM C 921, Type I (ASJ) for all piping.

1. Encase pipe fittings insulation with one-piece premolded PVC fitting coffers, fastened as per manufacturer's recommendations.

2. Encase exterior piping insulation with corrugated aluminum jacket 0.41mm *(.016")* thick with weather-proof construction and lock bands on 300 mm *(12")* centers.

C. Staples, Bands, Wires and Cement: As recommended by insulation manufacturer for applications indicated. Staples shall be stainless steel.

D. Adhesives, Sealers and Protective Finishes: As recommended by insulation manufacturer for applications indicated.

2.03 DUCTWORK INSULATION MATERIALS

A. Rigid Fiberglass Ductwork Insulation: ASTM C 612, Class 1, 160 kg/m^3 *(10 lbs/ft^3)* for use to 204°C*(400°F)*.

B. Flexible Fiberglass Ductwork Insulation: ASTM C 553, Type I, Class B-4, 24 kg/m^3 *(1.5 lbs/ft^3)*.

C. Jackets for Ductwork Insulation: ASTM C 921, Type I - vapor barrier, for ductwork with temperatures below ambient; Type I or Type II for ductwork with temperatures above ambient.

D. Ductwork Insulation Accessories: Provide stainless steel staples, bands, wires, tape, anchors, corner angles and similar accessories as recommended by insulation manufacturer for applications indicated.

E. Ductwork Insulation Compounds: Provide cements, adhesives, coatings, sealers, protective finishes and similar compounds as recommended by insulation manufacturer for applications indicated.

2.04 EQUIPMENT INSULATION MATERIALS

A. Rigid Fiberglass Equipment Insulation: ASTM C 612, Class 2, 192 kg/m^3*(12 lbs/ft^3)*, 204°C*(400°F)*.

B. Flexible Fiberglass Equipment Insulation: ASTM C 553, Type I, Class B-4, 24 kg/m^3 *(1.5 lbs/ft^3)*.

C. Jacketing Material for Equipment Insulation: Provide pre-sized glass cloth jacketing material, not less than 0.264 kg/m^2 *(7.8 ounces per square yard)*, or metal jacket when indicated.

D. Equipment Insulation Compounds: Provide adhesives, cements, sealers, mastics and protective finishes as recommended by insulation manufacturer for applications indicated.

E. Equipment Insulation Accessories: Provide stainless steel staples, bands, wire, wire netting, tape, corner angles, anchors and stud pins as recommended by insulation manufacturer for applications indicated.

Part 3 - EXECUTION

3.01 INSPECTION

A. Examine areas and conditions under which mechanical insulation is to be installed. Do not proceed with work until unsatisfactory conditions have been corrected in manner acceptable to Insulation Installer.

3.02 PLUMBING PIPING SYSTEM INSULATION

A. Insulation Omitted: Omit insulation on chrome-plated exposed piping (except for handicapped fixtures), air chambers, unions, strainers, check valves, balance cocks, flow regulators, drain lines from water coolers, drainage piping located in crawl spaces or tunnels, buried piping, fire protection piping and pre-insulated equipment. Omit insulation on CW in lift, central plant or bridge.

B. Cold Piping:

1. Application Requirements: Insulate the following cold plumbing piping systems:

a. LN2 System vent lines

2. Insulate each piping system specified above with one of the following types and thicknesses of insulation:

a. Fiberglass: 25 mm*(1")* thickness

C. Hot Piping:

1. Application Requirements: Insulate the following hot plumbing piping systems:

a. Potable hot water piping
b. Potable hot water recirculating piping

2. Insulate each piping system specified above with one of the following types and thicknesses of insulation:

    a. Fiberglass: 25 mm *(1")* thick for pipe sizes up to and including 150 mm *(6")*.

3.03 HVAC PIPING SYSTEM INSULATION

A. Insulation Omitted: Omit insulation on hot piping within radiation enclosures or unit cabinets; on cold piping within unit cabinets provided piping is located over drain pan. Do not insulate Petes plugs.

B. Cold Piping (39°C *(0°F)* to ambient):

1. Application Requirements: Insulate the following cold HVAC piping systems:

    a. HVAC chilled water supply and return piping
    b. HVAC make-up water piping
    c. Air conditioner condensate drain piping
    d Deionized cooling water supply and return piping
    e. Laboratory chilled water supply and return piping

2. Insulate each piping system specified above with one of the following types and thicknesses of insulation:

    a. Fiberglass: 25 mm *(1")* thick for pipe sizes up to and including 50 mm *(2")*, 40 mm *(1-1/2")* thick for pipe sizes over 50 mm *(2")*.

C. Hot Low Pressure Piping (to 121°C *(250°F)* :

1. Application Requirements: Insulate the following hot low pressure HVAC piping systems (water piping up to 121°C *(250°F)* .

    a. HVAC heating water supply and return piping
    b. Hot gas refrigerant piping
    c. DI cooling water supply and return piping

2. Insulate each piping system specified above with one of the following types and thicknesses of insulation:

    a. Fiberglass: 40 mm *(1 1/2")* thick for pipe sizes up to and including 50 mm *(2")*, 50 mm *(2")* thick for pipe sizes 65 mm *(2 1/2")* through 150 mm *(6")*.

3. Insulation of Piping Exposed to Weather: Protect outdoor insulation from weather by installing outdoor protective or jacketing of 0.41mm *(.016")*aluminum jacket with lock type bands on 300 mm *(12")* centers.

3.04 DUCTWORK SYSTEM INSULATION

A. Insulation Omitted:

1. Do not insulate lined ductwork.2. Do not insulate hood exhausts.

B. Hot, Cold and Dual Temperature Ductwork:

1. Insulate each ductwork system specified above with one of the following types and thicknesses of insulation:

a. Flexible Fiberglass: 40 mm (1-1/2") thick; *increase thickness to 50 mm (2")*
in loft spaces.

b.The ductwork exposed to weather shall be insulated with high strength rigid board fiberglass insulation with weatherproof and solar ray-resistant coating, see duct board type insulation below.

c. Duct Board Type Insulation: Shall have factory applied flame retardant, 2"thick, Foil-Resistant Kraft Facing (FRK-25, UL labeled). Insulation shall be cut and fit tightly between standing seems. Secure insulation with Mechanical fasteners on all sides, spaced at one fastener per square foot. Secure insulation to top of duct with Insulation Bonding Adhesive. All joints shall be tightly butted. Tape all joints and cover all pin penetration with 4-inch wide x 0.0025-inch Foil Tape adhered with lap adhesive, to provide a complete vapor barrier envelope. Secure metal corner beads to all exterior edges of insulated duct and cover with 6 oz canvas adhered with Lagging adhesive and brushed with one coat of Lagging adhesive. Finish insulation with two coats of manufacturer's recommended vapor barrier and weatherproof coating troweled or sprayed in place to a total wet thickness of 1/4-inch, reinforced between coats with open-weave glass cloth. After second layer of mastic has dried, coat and seal with a layer of asphalt-aluminum sealer brushed in place.

3.05 EQUIPMENT INSULATION

A. Cold Equipment (Below Ambient Temperature):

1. Application Requirements: Insulate the following cold equipment:

a. Drip pans under chilled equipment
b. Cold and chilled water pumps
c. Chilled water expansion tanks

d. DI water storage tank
e. All equipment and in-line devices in contact with chilled water (below ambient temperature)

2. Insulate each item of equipment specified above with one of the following types and thicknesses of insulation:

a. Rigid Fiberglass: 50mm(2") thick for surfaces above 2°C *(35°F)*.

B. Hot Equipment (Above Ambient Temperature):

1. Application Requirements: Not required.

3.06 INSTALLATION OF PIPING INSULATION

A. General: Install insulation products in accordance with manufacturer's written instructions and in accordance with recognized industry practices to ensure thatinsulation serves its intended purpose.

B. Install insulation on pipe systems subsequent to installation of painting, testing and acceptance of tests.

C. Install insulation materials with smooth and even surfaces. Insulate each continuous run of piping with full-length units of insulation, with single cut piece to complete run. Do not use cut pieces or scraps abutting each other.

D. Clean and dry pipe surfaces prior to insulating. Butt insulation joints firmly together to ensure complete and tight fit over surfaces to be covered.

E. Maintain integrity of vapor-barrier jackets on pipe insulation, and protect to prevent puncture or other damage.

F. Cover valves, fittings and similar items in each piping system with equivalentthickness and composition of insulation as applied to adjoining pipe run. Install factory molded, precut or job fabricated units (at installer's option) except where specific form or type is indicated.

G. Extend piping insulation without interruption through walls, floors and similar piping penetrations, except where otherwise indicated.

H. Butt pipe insulation against pipe hanger insulation inserts. *For hot pipes, apply 80 mm (3") wide vapor barrier tape or band over the butt joints. For cold piping apply wet coat of vapor barrier lap cement on butt joints and seal joints with 80 mm (3") wide vapor barrier tape or band.*

3.07 INSTALLATION OF DUCTWORK INSULATION

A. General: Install insulation products in accordance with manufacturer's written instructions, and in accordance with recognized industry practices to ensure that insulation serves its intended purpose.

B. Install insulation materials with smooth and even surfaces.

C. Clean and dry ductwork prior to insulating. Butt insulation joints firmly together to ensure complete and tight fit over surfaces to be covered.

D. Maintain integrity of vapor-barrier on ductwork insulation, and protect it to prevent puncture and other damage.

E. Extend ductwork insulation without interruption through walls, floors and similar ductwork penetrations, except where otherwise indicated.

F. Lined Ductwork: Except as otherwise indicated, omit insulation on ductwork where internal insulation or sound absorbing linings are specified.

G. Corner Angles: *Except for oven and hood exhaust duct insulation*, install corner angles on external corners of insulation on ductwork in exposed finished spaces before covering with jacketing.

3.08 INSTALLATION OF EQUIPMENT INSULATION

A. General: Install equipment thermal insulation products in accordance with manufacturer's written instructions, and in compliance with recognized industry practices to ensure that insulation serves intended purpose.

B. Install insulation materials with smooth and even surfaces and on clean and dry surfaces. Redo poorly fitted joints. Do not use mastic or joint sealer as filler for gapping joints and excessive voids resulting from poor workmanship.

C. Maintain integrity of vapor-barrier on equipment insulation and protect it to prevent puncture and other damage.

D. Apply insulation using staggered joint method for both single and double layer construction, where feasible. Apply each layer of insulation separately.

E. Coat insulated surfaces with layer of insulating cement, troweled in workmanlike manner, leaving smooth continuous surface. Fill in scored block, seams, chipped edges and depressions, and cover over wire netting and joints with cement of sufficient thickness to remove surface irregularities.

F. Cover insulated surfaces with all-service jacketing neatly fitted and firmly secured. Lap seams at least 50 mm *(2")*. Apply over vapor barrier where applicable.

G. Do not insulate manholes, handholes, cleanouts, ASME stamp or manufacturer's nameplate. Provide neatly beveled edge at interruptions of insulation.

H. Provide removable insulation sections to cover parts of equipment which must be opened periodically for maintenance; include metal vessel covers, fasteners, flanges,frames and accessories.

3.09 EXISTING INSULATION REPAIR

A. Repair damaged sections of existing mechanical insulation, both previously damaged or damaged during this construction period. Use insulation of same thickness as existing insulation, install new jacket lapping and sealed over existing.

3.10 PROTECTION AND REPLACEMENT

A. Replace damaged insulation which cannot be repaired satisfactorily, including units with vapor barrier damage and moisture saturated units.

B. Protection: Insulation installer shall advise Contractor of required protection for insulation work during remainder of construction period, to avoid damage and deterioration.

END OF SECTION

SECTION 15330

AUTOMATIC FIRE SPRINKLER SYSTEM
(DESIGN AND INSTALL)

PART 1 - GENERAL

1.01 RELATED DOCUMENTS

A. Drawings and general provisions of contract, including General and Supplementary Conditions and Division 1 Specification sections, apply to work of this section as if repeated herein.

B. Refer to Section 15010, "Basic Mechanical Requirements."

C. Refer to Section 15411, "Water Distribution Piping" for requirements on disinfection of potable water piping.

D. Refer to section 02717 "Site Fire Water System" for requirements pertaining to underground piping.

1.02 DESCRIPTIONS

A. This section includes design, materials and installation of complete wet pipe automatic fire protection sprinkler system for areas of work as indicated on the contract drawings and specifications.

B. This section includes design, materials and installation of the fire sprinkler system downstream of the flanged stub-up at the base of the sprinkler riser, unless otherwise noted on contract drawings.

1.03 WORK INCLUDED

A. The work to be performed under this specification shall include providing all shop drawings, hydraulic calculations, equipment, materials, labor and supervision necessary to design, furnish, install, test, and place in service the fire protection systems as shown on the drawings and as described in these specifications. *The work shall specifically include, but not be limited to, main system riser(s), riser equipment, valves, water flow switches, all interior piping and fittings, fire department connections, all hangers and other supports with fasteners as required for complete installation, main and auxiliary drains, operating instructions, identification, testing, disinfection of piping, and all such other work as may be required to provide complete, fully operable systems in accordance with the current editions of NFPA 13, 14 and 24, and this specification.* The

system design and layout shall be based on actual survey and contract drawings. Work also includes coordination of work with other trades.

1.04 WORK NOT INCLUDED

A. Electrical work

B. Painting

1.05 SUBMITTALS

A. Submit shop drawings in accordance with the General Provisions.

B. Submit for review complete shop drawings and hydraulic calculations showing the location of all sprinklers and piping. Shop drawings shall conform to the requirements established for working plans as prescribed in NFPA 13, current edition.

C. NO INSTALLATION WILL BE PERMITTED PRIOR TO THE SDR APPROVAL OF COMPLETED SHOP DRAWINGS, PRODUCT DATA AND HYDRAULIC CALCULATIONS.

D. Submit product data in accordance with Section 01300 for the following, but not limited to, items:

1. Fire sprinklers
2. Water flow switches
3. Pipe hangers, supports and seismic bracing, including fasteners
4. Alarm check valve with trim
5. OS&Y sectional gate valves
6. Fire department connections
7. Valve supervisory switches
8. Flexible and rigid couplings
9. Pipe and fittings
10. Backflow prevention assemblies
11. Check valves
12. Fire hose valves
13. Inspector's test valves
14. Post indicator valves
15. Signs and placards
16. All other system components

E. Drawings shall show all details required or recommended by NFPA 13 plus:
   a. All fire sprinkler drawings will reference the architectural floor plans.
   b. Files will be completed on a one to one scale.
   c. Unless otherwise specified, drawings shall be plotted at ¼ "=1'-0".

d. Room number and name (if applicable) shall appear in each room.
e. Potential obstructions (i.e. columns, beams, ductwork, etc.) shall be shown.
f. A legend of symbols used shall be provided.
g. Pipe lengths shall be shown, center to center of fittings.
h. Where more than one type of pipe material is used, each piece of pipe shall be identified as to material type.
i. No lettering will be smaller than 1/8” plotted height.

F. Test reports and certificates including " Contractor's material & test certificate for aboveground piping" and " Contractor's material & test certificate for underground piping" as described in NFPA 13 and NFPA 24, current editions.

G. Upon completion of the work, Contractor shall revise all drawings and hydraulic calculations to agree with the construction as actually accomplished. The notation "As-Built" shall be entered in the revision block, dated and initialed.

1.06 APPLICABLE STANDARDS AND PUBLICATIONS

A. The current edition of the following publications of the issues listed below, but referred to thereafter by basic designation only, form a part of this specification to the extent indicated by the references thereto:

1. National Fire Protection Association (NFPA)

a. NFPA 13 - Standard for Installation of Sprinkler Systems

b. NFPA 14 -Standard for Installation of Standpipe Systems

c. NFPA 24 - Installation of Private Fire Service Mains and Their Appurtenances

d. NFPA 25 – Standard for Inspection, Testing and Maintenance of Water-Based Fire Protection Systems.

2. Factory Mutual System (FM)

a. Factory Mutual Approval Guide

3. Underwriters Laboratories, Inc. (UL)

a. Fire Protection Equipment Directory, with all supplements thereto.

For interpretation of the above NFPA Fire Codes, the “authorities having jurisdiction” referred to in the codes shall be the Sandia Delegated Representative (SDR) and Sandia National Laboratories Fire Protection Engineering.

1.07 DESIGN CRITERIA

A. General

1The designer of the fire suppression system shall meet one of the requirements below:

j. A registered Professional Fire Protection Engineer (FPE)in the State of California.
k. Minimum National Institute for Certification of Engineering Technologies (NICET) Level IV in Automatic Sprinkler Systems..
l. Where NICET design is used, copies of the designers certificate from NICET shall be submitted along with the drawings for approval. The FPE shall stamp all other drawings.

2. The Contractor is responsible for the design of the automatic sprinkler system in accordance with these specifications and the contract drawings. The Contractor shall coordinate with architectural, mechanical, and electrical, design and construction documents, to ascertain the required information, to effect a properly designed sprinkler system for the building construction and occupancy classification. This coordination includes contacting the appropriate SNL and contract personnel to identify all building areas that may be subject to freezing conditions.

2. The design and installation of the automatic sprinkler systems shall be complete with all necessary accessories for proper operation. System design and installation shall reflect high quality professional work that properly accounts for practical maintenance concerns and aesthetic concerns, as well as meets the design density requirements. Departures from this standard of professionals including inefficient designs, unnecessary materials, and special system modifications to meet design density (e.g., reduced spacing the hydraulically remote areas) shall be avoided. The installation shall be performed by a licensed sprinkler Contractor (C-16) regularly engaged in this type of work and supervised by a NICET Level II certified technician. The installation shall be performed in accordance with requirements of the National Fire Protection Association standards (NFPA), Department of Energy, and Sandia National Laboratories.

3. The design of the fire suppression system shall be complete with all necessary accessories for proper operation and shall include seismic support details and supporting calculations.

4. The fire protection water supply lines, controlling devices, protective devices, alarm systems, supervisory devices, and related equipment shall be complementary to the designed system and Sandia National Laboratories existing fire protection systems.

5. The installation shall comply with all mandatory, advisory interpretations, and recommended applicable rules of the latest editions of the above standards, except where otherwise noted on the drawings or specified herein.

6. Interpretation of this standard specification and its references shall be governed by the SDR and SNL Fire Protection Engineering.

7. The Contractor shall produce drawings that indicate the extent and general arrangement of the automatic sprinkler systems.

B. Design

Entire building shall have automatic sprinkler protection, based on the following design criteria:

1. Light hazard occupancy rules are prohibited.

2. Pipe schedule method shall be permitted only for additions and modifications less than 279-m^2 (3,000-ft^2) to existing ordinary hazard pipe schedule systems. Pipe schedule design shall be based on Ordinary Hazard. All other designs shall be hydraulically calculated.

3. Sprinklers shall be standard 15-mm (½-inch) orifice with a standard K-factor (~5.6).

4. Maximum sprinkler spacing shall be 12-m^2 (130-ft^2)

5. Hydraulic calculations:

   a. Hydraulic calculations shall be based upon an area/density for Ordinary Hazard, Group 2 over the most hydraulically remote operating area.. A minimum hose stream allowance of 16-l/s *(250-gpm)* shall be taken into account. The pressure drop through the backflow preventer assembly shall be accounted for based on manufacturer's pressure drop data.

   b. Hydraulic calculations shall be performed by the fire protection computer program HAAS (latest edition), licensed by HRS Systems Inc. A single IBM formatted 3 1/2" floppy disk containing all HAAS input and output data shall be provided to the Sandia SDR at time of submittal and again upon approval of all hydraulic calculations.

   c. All calculations shall be performed in strict accordance with NFPA 13 except as modified by this specification or the design drawings. Calculations shall be sealed by a State of California Registered Fire Protection Engineer or signed by a NICET Level IV certified Technician in sprinkler systems.

c. The maximum waterflow velocity shall not exceed 6-m/s (20-ft./s) in any hydraulically designed sprinkler system piping.

e. Extend all hydraulic calculations back to the effective point of connection of the sprinkler lead in to the fire water main supplying the building.

6. Seismic calculations shall be provided for all seismic bracing in accordance per NFPA 13.

7. Fire Department Connection (FDC) design shall be per NFPA 13.

8. Full flow test connection. Where sprinkler system design includes a backflow preventer (BFP), a means shall be provided to perform forward full flow testing of the BFP at sprinkler system hydraulic demand or 1,000-gpm, whichever is greater. The design shall include a bypass line on the pressure side of the FDC check valve. The bypass line shall include an isolation valve and discharge piping designed to direct flow to eliminate erosion of landscaping. A fitting and cap shall be provided on the end of the line with a 4-1/2 inch National Standard Hose Thread male threads to match the site fire hydrants. A sign or label shall be attached to the cap or piping stating “For Flow Tests Only – Not for Fire Department Use””

1.08 GENERAL REQUIREMENTS

A. Qualifications of the Contractor: The Contractor performing the installation work under this specification shall have a current C-16 license in the State of California for sprinkler installations and shall be regularly engaged in the installation of fire protection sprinkler systems in accordance with NFPA 13.

B. Materials and equipment: Materials and equipment shall be new and current products of respective manufacturers. Where two or more pieces of equipment performing the same function are required, they shall be exact duplicates produced by one manufacturer. Materials and equipment shall conform to the requirements of the Underwriters Laboratories, Inc., and/or the Factory Mutual Engineering Corporation for systems of the type indicated and they shall be used in accordance with the manufacturer’s instructions and their UL-listing and/or FM approval. The Contractor shall submit proof that the items furnished under this specification conform to such requirements. The UL label or seal, or listing in the fire protection equipment directory for the service indicated will be acceptable evidence that the items conform to the requirements of the Underwriters Laboratories, Inc. The Factory Mutual label or seal, or listing in the Factory Mutual Approval Guide for the service intended will be acceptable evidence that the items conform to the requirements of the Factory Mutual Engineering Corporation.

PART 2 - PRODUCTS

2.01 MATERIAL

A. Overhead pipe: Sprinkler system pipe within the building shall be black, seamless, standard weight Schedule 40 steel pipe in sizes less than 200 mm *(8-inch)* and Schedule 30 in sizes 200 mm *(8-inch)* and larger, designed to withstand a working pressure of at least 2070 kpa *(300 psi)*. Pipe to conform to ASTM specifications ASTM A-795 and/or ASTM A-53 and NFPA 13. All drain and exterior pipe shall be hot dipped zinc coated (galvanized). Thin wall pipe, light wall pipe, and threadable light wall pipe are prohibited.

B. Pipe fittings: Screwed, flanged, grooved or welded fittings shall be malleable iron or carbon steel and of a type specifically approved for sprinkler systems and designed to withstand a working pressure of not less than 1210 kpa *(175 psi)* cold water pressure in accordance with NFPA 13. All drain and exterior fittings shall be galvanized. Flanged joints shall be made of 1.6 mm *(1/16-inch)* rubber gaskets and square head machine bolts with heavy finished hexagon nuts with dimensions conforming to ANSI B-16.5. Pipe joints shall be cut or rolled, grooved, screwed, or flanged. The use of bushings is prohibited. Push-on, press-fit type and/or any other plain-end type fittings shall not be used.

C. Underground Pipe: See 02717, *Site Fire Water* System for specifications on underground pipe.

D. Gate valves, Angle valves, Globe valves- 50 mm *(2-inch)* and smaller: UL-listed and /or FM approved for fire sprinkler service, body and bonnet of cast bronze, 1210 kpa *(175 psi)*min. cold water working pressure- non- shock, threaded ends.

E. Gate valves, Angle valves, Globe valves- 65 mm *(2-1/2-inch)* and larger: UL-listed and/or FM approved for fire sprinkler service, cast iron body, bronze mounted, 1210 kpa *(175 psi)* min. cold water working pressure- non- shock, solid taper wedge, outside screw and yoke, rising stem, flanged bonnet, with body and bonnet conforming to ASTM A-126 Class B; replaceable bronze wedge facing rings; flanged ends; and a packing assembly consisting of a cast iron gland flange, brass gland, packing, bonnet, and bronze bonnet bushing. Valves shall be capable of being repacked under pressure, with valve wide open. Valves 2-1/2 inch and larger shall be provided with an electrical valve supervisory switch.

F. Check valves: UL-listed and/or FM approved check valves 65 mm *(2-1/2-inch)* and larger shall be flanged cast iron body, bronze mounted, full opening, horizontal swing, rubber faced, rated for 1210 kpa *(175 psi)*, non-shock cold water service. Check valves 50 mm *(2-inch)* and smaller shall be screwed, bronze body and trim, regrinding type, horizontal swing, rated for 1210 kpa *(175 psi)*, non-shock cold water service.

G. Check valves: Alarm check valves and check valves shall be UL-listed and/or FM approved and provided with standard trimmings including pressure gages,

alarm switch, testing bypass, and all necessary pipe, fittings, and accessories required for a complete trimming installation, in accordance with NFPA 13.

H. Water flow alarm switches: Paddle-type water flow alarm switch shall be UL-listed and/or FM approved, rated to 1725 kpa *(250 psig);* designed for horizontal or vertical installation; have two (2) single pole double throw (SPDT) circuit switches to provide isolated alarm and auxiliary contacts, 7 ampere 125 volts AC and 0.25 ampere 24 volts DC; complete with factory-set, field-adjustable retard element to prevent false signals, and tamper-proof cover which sends a signal when cover is removed. Electrical wiring by Division 16.

I. OS&Y Valve supervisory switches: The switch shall have tamper proof cover with 2-SPDT contacts, 15 ampere 115 volt AC. UL listed for outdoor use and FM approved. The switch shall be adjusted to operate within two revolutions of the valve stem. Electrical wiring by Division 16. Potter Model OSYB or approved equal.

J. Post Indicator Valve supervisory switches: The switch shall have tamper proof cover with 2-SPDT contacts, 15 ampere 115 volt AC. UL listed for outdoor use and FM approved. Electrical wiring by Division 16. Potter Model PCVS-2 or approved equal.

K. Backflow prevention assembly: Double check type. Preventer assembly shall be approved and listed, for the specific use and orientation for which it is to be installed, by the Foundation for Cross-Connection Control and Hydraulic Research of the University of Southern California, UL and/or FM approved, FEBCO Model 850 for vertical installation no substitution.

L. Drains: Main and auxiliary drains conforming to referenced standards shall be provided for the main risers and for every portion of the system trapped by reason of elevation or feed main routing, such portion involving more than five sprinklers. Drain shall be installed downstream of any sectional valve. Main riser drain shall terminate outside adjacent main riser. In no case shall a direct connection be made to any building drain or the sewer system. Plugs used for auxiliary drains shall be brass.

M. Inspector's Test and Drain valve: UL-Listed and/or FM approved inspector's test and drain valve connections shall be provided, with all valves located so as to be readily accessible. The test apparatus shall include a positive shut-off, self-draining, cleanable sight taps, permanently installed ½" orifice, as manufactured by Potter-Roemer Test and Drain 6100 series or approved equal.

N. Inspector's Test Valve Box: 14 gauge, steel construction with dimensions as noted on the drawings, continuously welded seams, full width mounting flange, full width body flange trough to exclude liquids and contaminants, hidden hinges, 120 degree door opening, gasketed door, self-grounding latch system with

integral seals, hasp lock, complete with all mounting nuts, grounding hardware, and sealing washers, primer finish, NEMA 4X rating, as manufactured by Hoffman or approved equal.

O. Fire department connection: Fire department connection shall be UL and/or FM approved, flush type, brass finish, 100 mm *(4-inch)* connection with 65 mm *(2-1/2-inch)* inlets and caps. Hose threads shall be National Standard Hose. Inlets to be approximately 915 mm *(36-inches)* above grade. The completed installation shall include a metal sign or escutcheon plate, with raised lettering, marked "FIRE DEPARTMENT CONNECTION".

P. Signs: All control, drain, and test valves, shall be provided with identification signs in accordance with referenced standards. Signs shall be porcelainized metal. Provide hydraulic information placards at all sprinkler risers.

Q. Gages: Gages shall be minimum 80 mm *(3-inch)* dial, reading approximately mid-scale at normal operating pressure. Provide petcocks and test gage connections per NFPA 13.

R. Sleeves: Pipe sleeves shall be provided where pipes pass through concrete floors, foundations, walls and partitions. Sleeves shall comply with NFPA 13. The space between the pipe and the sleeve shall be filled with an approved non-combustible flexible packing material. Use fire stopping packing material for penetration through fire-rated walls, ceilings or slabs. The space between the sleeve and wall shall be adequately grouted. Watertight pipe sleeves shall be provided where pipes pass through floors and exterior building walls. Floor sleeves shall terminate 100 mm *(4-inches)* above finished floors. The space between the pipe sleeve shall be packed with a water resistant packing material and the sleeves shall be grouted-in. A suitable collar set in waterproofing mastic shall be installed to form a seal at the intersection of sleeve and finished floor. Exposed pipes passing through walls, partitions and ceilings in finished areas shall be provided with steel or cast iron escutcheon plates painted to match adjacent surfaces.

S. Sprinklers: All sprinklers located 2.1 m *(7 feet)* or less above floor level and other sprinklers subject to mechanical damage shall be provided with sprinkler guards. Sprinklers shall be installed with deflectors parallel to the ceiling or surface above. Sprinklers in finished ceiling areas shall be semi-recessed pendent low profile *white finish* in semi-recessed white escutcheons. Sprinklers in unfinished ceiling areas shall be pendent or upright, bronze finish. Sprinklers exposed to exterior corrosive atmosphere shall be lead coated or of the corrosion-proof type.

Thread and orifice size shall be 15 mm *(1/2-inch)* NPT and standard 15 mm *(1/2-inch)* with a standard "K" factor (~5.6). All sprinklers shall be listed by Underwriters Laboratories and/or approved by Factory Mutual, and shall be

Viking Micromatic, or an approved equal. *Provide sidewall sprinklers where indicated.*

Selection of sprinkler temperature ratings shall meet the requirements of NFPA 13. In general, ordinary temperature 57.2-76.7 degrees C *(155-170 degrees F*) sprinklers shall be installed in offices, labs, meeting rooms, lobbies, corridors, and restrooms. Intermediate temperature 79-107 degrees C *(175-225 degrees F)* sprinklers shall be installed in mechanical and electrical equipment rooms, elevator machine rooms, elevator shafts, computer rooms, telephone equipment rooms, electrical closets, closets, loft areas and under canopies. High temperature 141 degrees C *(286 degrees F)* sprinklers shall be installed in stock or storage rooms, boiler rooms and switchgear rooms.

T. Spare sprinklers: At least 6 additional sprinklers of each type sprinkler installed and one wrench for each type sprinkler, as required by NFPA 13, shall be provided to the SDR.

U. Hangers & fasteners: All hanger components shall be of the UL-listed and/or FM approved type. Below concrete construction, inserts, expansion cases or hilti-type drop-ins shall be installed to support the 25 mm through 100 mm *(1-inch through 4-inch)* size sprinkler piping. Below concrete construction, insets shall be installed for all 125 mm *(5-inch)* or larger, or in lieu of the inserts, expansion cases, spaced not more than 3 m *(10 feet)* apart may be installed in accordance with NFPA 13. Below steel deck and joist construction, use beam clamps, with retaining straps or other approved means to prevent movement, to hang from top chord or joist. Do not hang piping from bottom chord, or bridging. Powder driven studs shall not be used.

V. Insulation:

1. Acceptable Manufacturers: Subject to compliance with requirements, provide products of one of the following:

Armstrong World Industries, Inc.
Babcock & Wilcox; Insulating Products Div.
CertainTeed Corp.
Knauf Fiber Glass GmbH.
Manville Products Corp.
Owens-Corning Fiberglas Corp.
Pittsburgh Corning Corp.

2.Fiberglass Piping Insulation: ½" thickness, ASTM C 547, Class 1 for use to 230°C *(450 degrees F)*, unless otherwise indicated.

3.Jackets for Piping Insulation: ASTM C 921, Type I (ASJ) for all piping.

a. Encase pipe fittings insulation with one-piece premolded PVC fitting coffers, fastened as per manufacturer's recommendations.

b. Encase exterior piping insulation with corrugated aluminum jacket 0.41mm *(.016")* thick with weather-proof construction and lock bands on 300 mm *(12")* centers.

4.Staples, Bands, Wires and Cement: As recommended by insulation manufacturer for applications indicated. Staples shall be stainless steel.

5.Adhesives, Sealers and Protective Finishes: As recommended by insulation manufacturer for applications indicated.

PART 3 - EXECUTION

3.01 INSTALLATION

A. The Contractor is responsible for the design and installation of the automatic sprinkler system. The fire protection system installation shall be coordinated with the other trades (mechanical, electrical and structural, etc.).

B. The installation shall be supervised by a technician certified as NICET Level II (minimum) in fire sprinklers.

C. Deviations from contract drawings for sprinkler piping require written approval from the SDR. Written approval shall be on file with the SDR prior to any deviation in the field.

D. For modifications to existing systems, the sprinkler system shall be placed in service at the end of each work day to the maximum extent practical. Coordinate with the SDR.

E. Contamination prevention: Pipe interiors shall be kept free of debris. Piping shall be reamed to remove all burrs, and pipe section shall be cleaned inside to remove all chips, and foreign materials prior to making joints.

F. Underground Supply System: See section 02717 *Site Fire Water System*, for details on installation of underground piping.

G Pipe and Fittings Above Ground:

1. Pipe, fittings, and hangers shall be installed where shown on the drawings and in accordance with NFPA 13.

2. Exposed piping in finished areas shall be installed in a neat and workmanlike manner, and shall be held as close to the structure as possible. Care shall be taken to avoid trapping of any portion of the system by incorrectly pitched pipe. All piping shall be accurately cut to measurements established by the Contractor per approved shop drawings, and shall be worked into place without springing or forcing. In any situation where bending of piping is required, such bending shall be accomplished through the use of a standard pipe bending machine and done in accordance with NFPA 13.

3. Sprinkler piping shall be installed above suspended ceilings except as noted otherwise.

4. Where pipe is exposed to atmosphere or to outdoor weather, (e.g., overhead sprinkler piping, drain and test piping, fire department connection piping, etc.), it shall be galvanized.

5. All pipe smaller than 6-inches diameter subject to outdoor weather shall be insulated with ½" thick fiberglass, see section 2.01V.

6. No cutting, welding or torch work will be permitted in any portion of the building without permission of Sandia SNL Fire Protection Engineering.

7. Welded outlet fittings shall be UL listed or FM approved. The fitting/pipe assembly shall be shop fabricated:

    a. Holes in the pipe for outlets shall be cut to the full inside diameter of the fitting, and shall be installed as such.

    b. The welded fitting may overlap the hole in the pipe by a maximum of 1.2 mm *(3/64-inch)* (based on a fitting with a wall thickness of 5 mm *(3/16-inch)* provided part "a" above is still maintained. Note: the hole cut in the pipe would be 2.4 mm *(3/32-inch)* larger than the full inside diameter of the fitting, a positive tolerance of 2.4 mm *(3/32-inch).* SNL Fire Protection Engineering shall approve all welded outlets before installation.

8. Rigid Joints:

    a. Joints shall be left exposed until final inspection and testing have been witnessed by the SDR and SNL Fire Protection Engineering.

    b. Swing or sprig joints (armover) shall be used for connecting pendent sprinklers to branch lines for branch lines located above lowered ceilings.

    c. Screwed, flanged, or grooved joints in accordance with NFPA 13 are acceptable.

9. Flexible Joints:

    a. Flexible (mechanical groove) joints shall be used in sprinkler risers and in feed mains in accordance with NFPA 13 for protection against earthquake damage.

10. Flanged fittings:

    a. A flanged tapered reducer shall be installed at the flange and spigot piece when the alarm valve is smaller than the underground supply line.

    b. Pipe shall be installed straight and true with no greater deflection at flexible pipe couplings than is recommended by the manufacturer.

    c. Flanged joints shall be face matched. Raised face flanges shall not be mated to flat-face cast-iron flanges on valves or equipment. The raised face must be machined flush. All flange bolt holes shall straddle the horizontal and vertical centerlines unless otherwise noted. The bolts shall be square head machine bolts in heavy-semi-finished hexagonal nuts and shall comply with ANSI B-31.1, power piping. Torque values and tightening sequence for bolts shall be in accordance with flange manufacturer's instructions.

    d. Install insulating kits on flanges connecting dissimilar metals (such as steel to copper) to prevent electrolytic action.

    e. Plain end couplings are not acceptable.

11. Pipe Hangers and Anchors:

    a. All piping must be substantially supported from building structure and only approved type of hangers shall be used. Piping under ducts shall not be supported from duct work, but shall be supported from building structure with trapeze hangers where necessary or from steel angles supporting duct work in accordance with NFPA 13.

    b. Off-sets in hanger rods will not be permitted.

    c. Concrete anchors shall be installed by drilling and installing a UL listed or FM approved anchor.

12. Bushings: Bushings are not normally permitted. The SDR and SNL Fire Protection Engineering may approve the use of bushings only when an appropriate reducing fitting is not manufactured.

13. Control Valves:

a. Post indicator control valves, PIV, shall be located a minimum of 12.2 m *(40 feet)* from any structure. Exceptions shall be approved by SNL Fire Protection Engineering.

b. Valves shall be checked during pressure test and stuffing boxes shall be tightened if necessary.

c. Bollards shall be installed around post indicator valves.

d. Post indicator valves shall be installed such that grade mark is level with the finish grade.

e. Control valves shall be provided with identification signs describing the areas protected. Where the valve location is concealed above the ceiling, a sign below the ceiling shall indicate the valve location, and identify the protected area.

f. A pressure gage cock and approved gage shall be installed downstream of interior sectional control valves of 102 mm *(4-inch)* size or larger.

14. Pipe Sleeves:

a. Pipe sleeves shall be installed and properly secured in place at all points where sprinkler piping passes through concrete or masonry construction. Sleeves through all walls and floors shall provide adequate clearance for slight movement of the piping in accordance with NFPA 13.

b. Sleeves for pipes passing through floors of concrete or waterproof construction shall project 80 mm to 150 mm *(3-to-6-inches)* above floors to prevent leakage. Sleeves through walls shall be cut flush with each surface unless otherwise specified. Sleeves shall be caulked to make penetration watertight.

c. Holes through walls, floors, and ceilings of other than concrete or masonry construction shall be large enough to accommodate pipe expansion. Cutting or drilling of the holes shall be carefully done and affected surfaces and structure shall be fully restored to original conditions. All holes through walls, partitions, floors and ceilings shall be neatly machine cut or drilled using tools appropriate for the material being penetrated. Holes through existing concrete floors and walls shall be core drilled to provide clean, neat holes. Any damage to structure, piping, or equipment caused by the Contractor shall be repaired and refinished by skilled mechanics at the trade involved and at no additional cost to Sandia. Spaces between pipe and sleeve or pipe and opening for floors and exterior walls shall be filled with a nonhardening sealant material and

made watertight. Where fire rated barriers are penetrated, the sealant and application system shall be UL listed or FM approved to retain the fire resistance rating of the barrier.

15. The cutting of structural members for the passage of sprinkler piping or for pipe-hanger fastenings will not be permitted, except by prior written approval of the SDR.

16. Install finished ceiling and wall plates (piping escutcheons) whenever exposed piping passes through floors, ceilings, and walls.

G. Check valve

1. A check valve shall be installed on each sprinkler riser. These valves shall be provided with standard trimmings, including pressure gages, 50 mm *(2-inch)* system drain.

H. Backflow Prevention

1. A double check backflow prevention assembly (BFP) shall be installed to prevent cross-connection contamination between potable water systems and any fire sprinkler system, at the service connection for the fire sprinkler system.

2. BFP assemblies installed or used under this contract shall be tested by a "certified backflow control assembly tester" who possesses a current (within three (3) years from date of issuance) certificate that confirms successful completion of an approved (SDR specified or USC-FCCCHR) Training Course.

3. BFP assemblies shall be installed in accordance with AWWA Manual M14 requirements, and their listing.

4. Control valves shall be provided.

5. The installation of the BFP shall provide the following:

   a. Easy accessibility for testing and maintenance.

   b. Proper support.

   c. Provision for excessive pressure or thermal expansion downstream.

   d. Placement between 300 mm and 1500 mm *(12-inches and 60-inches)* above finished floor level.
   e. A means to efficiently perform forward flow testing at design flow.

6. Adequate drainage must be provided for BFP to allow for maintenance.

7. The Contractor shall perform an operational test on any new or relocated BFP assemblies used or installed under this contract. Passing backflow preventers shall be labeled with the system designation, location, test performed, tester's initials, and date. All data shall be permanently engraved on a durable plastic or aluminum tag attached to BFP with a chain. Testing documentation shall be submitted to the SDR.

8. Repairs to BFPs shall be made with original manufacturer's parts.

I. Sprinklers

1. Sprinklers below, or recessed in, suspended ceilings shall use a balanced layout that is symmetrical to the space, and parallel to ceiling features, walls, lights, etc. The finish of escutcheon plates shall be aesthetically coordinated with the suspended ceiling.

2. Pendent sprinklers shall be in alignment, and parallel to ceiling fixtures, walls, etc. Sprinklers located in suspended (lay-in-tile) type ceilings shall be centered in the tile unless otherwise noted in design documents. In rooms less than 150 sq. ft. in size, heads may be located at the ¼ point (intersection of ¼ of the width and ¼ of the length) of the tile.
Install sprinklers as required by NFPA 13 with regards to ducts, obstructions and partitions.

3. In areas without a suspended ceiling, install sprinkler piping as high as possible, using necessary fittings and auxiliary drains to maintain maximum clear headroom.

4. Pendent sprinklers shall be fed by swing/sprig joints from 25 mm *(1-inch)* fittings in branch lines.

5. Dry pendent and horizontal dry sidewall sprinklers shall only be installed in screwed tee fittings. Use shall be approved by SNL Fire Protection Engineering, prior to design or installation.

6. Sprinklers are required above suspended ceilings. Light hazard spacing may be utilized. Separate hydraulic calculations are not required.

7. Sprinkler head guards shall be provided on all sprinklers located below 2.1 m *(7 feet)* and where potential damage may occur.

8. Sprinklers shall be required above and below pipe racks, multiple raceways and similar obstructions unless otherwise approve by SNL Fire Protection Engineering.

J. Drains

1. Drains shall include, but are not limited to: 50 mm *(2-inch)* main drains and inspector test connections, etc.

2. 50 mm *(2-inch)* drains shall be installed on all main risers and downstream of any interior sectional valves.

3. Inspector's test connections shall be installed on each sprinkler system as near the most hydraulically remote end of the system as possible while meeting operation and aesthetic requirements. These requirements essentially entail placement of the inspector's test connection in a room or area where a function or the appearance will not be detracted from by the location or presence of this piping and related valve(s) and signage. The orifice shall be sized to discharge a flow equivalent to the smallest orifice sprinkler in the system. The inspector's test valve shall be located not more than 1.8 m *(6 feet)* above the floor in a visible, easily accessible location. In multi-level buildings where water flow alarm devices are provided for each floor or where more than one alarm device is provided in a single sprinkler system, a separate inspector's test connection shall be provided for each alarm device. In multi-level buildings where more than one inspector's test connection is required, all the valves shall be manifolded together at a single location on the grade floor, with a sight glass and a common drain line discharging outdoors. Where the inspector's test connection is to be located in a room with a door, the room shall be readily accessible (e.g., no combination locks, etc.). The Inspector's test line shall terminate outdoors to a safe location and be provided with a concrete splash block.

4. Drains shall be piped to discharge to the outside. Drains shall be run through the walls as close to the floor or grade line as possible, terminating with a 45-degree elbow turned down to splash blocks.

5. A 20 mm *(3/4-inch)* valved auxiliary drain with standard hose threads and caps shall be installed at all low points in the system, where more than five sprinklers are trapped. Where the capacity of trapped piping exceeds 75 l (20 gallons), the overflow shall be piped to drain. Drains which cannot be piped to the outside shall be piped to a drain, sump, etc. Which is approved for such use and volume. Approval shall be by the SDR and SNL Fire Protection Engineering. A sight glass shall be provided if discharge is not visible.

6. Concrete splash blocks, 0.5 m x 0.5 m x 0.1 m *(18" x 18" x 4")* minimum in size, shall be installed under each drain or test outlet. The top of the block

shall be 25.4 mm *(1-inch)* above grade, with a slope of 12.7 mm/m *(1/2-inch per foot)* away from the building wall.

K. Fire Department Connections

1. Fire department connections shall be installed at each new alarm valve and main system riser.

2. Fire department connections shall have a minimum of two 65 mm *(2-1/2-inch)* inlets with national standard hose threads, internal double clapper check valve, brass plugs (with attached chains) or caps the check valve and normally open automatic ball drip (ABD) shall be located at points where they will not be subject to freezing temperatures, and the discharge from the ball drip shall be piped to drain. Refer to Section 3.05, drains. The ball drip shall close when the flow of water through the valve is in the range of 0.25 to 0.6 l/s (4 through 10 gpm). All ball drips shall be rated at 1210 kpa *(175 psi).* Use valved drains in place of automatic ball drip drains when the static head of water above the ABD will exceed 3.5 m *(11'-6")* 34 kpa *(5 psi)*. Check valves shall be UL listed or FM approved and shall have bodies with the UL or FM stamp.

3. The fire department connection shall be installed between 0.5 m and 1.0 m *(18-inches and 36-inches)* above grade. When the centerline of pipe opening is located between 0.75 m and 1 m *(24-inches and 36-inches)* above grade, and only under this condition, a 45-degree-type fire department connection shall be installed.

4. The completed installations shall include a metal escutcheon plate, with raised lettering, marked "FIRE DEPARTMENT CONNECTION STANDPIPE-AUTO. SPKR," "AUTOMATIC SPKR," or "STANDPIPE," as appropriate.

5. Fire department connections shall be located on the fire department access side of the building and within 15.2 m *(50 feet)* of a fire hydrant.

L. Identification

1. Each sprinkler riser or water flow supervisory device shall be identified to the zone/area which it serves.

2. Material shall be durable plastic or aluminum. Lettering shall be white on a red background. Minimum height of lettering is 3 mm *(1/8-inch).*

3. Contractor shall furnish and install a cabinet containing maintenance and repair equipment (spare heads, wrench, etc.) at a location specified by the SDR.

M. Earthquake Protection

1. Sprinkler system piping shall be protected to prevent pipe breakage during an earthquake in accordance with NFPA 13.

2. Approved sway bracing shall be provided for risers, mains, feed mains and cross mains.

3. Provide approved flexible (mechanical grooved) pipe couplings for risers and all piping 65 mm *(2-1/2-inch)* or large in accordance with NFPA 13.

4. Branch lines shall be restrained against excessive movement in accordance with NFPA 13.

N. Flushing Connections

1. Provide flushing connections on all cross mains in accordance with NFPA 13.

3.02 ACCEPTANCE

Arrangement with Sandia for final inspections and witnessing of tests shall be made at least 5 working days prior to any tests and flushing.

All tests shall be conducted in the presence of the SDR and SNL Fire Protection Engineering.

A. Hydrostatic Tests-Aboveground:

1. After flushing system test fire sprinkler piping hydrostatically, for a period of 2 hours, at not less than 1380 kpa *(200 psi).* in accordance with NFPA 13. Check system for leakage at joints or a drop in pressure. Measure hydrostatic pressure at low point of each system or zone being tested. Replace all piping system components that do not pass the test procedures specified. All tests shall be performed when SDR is present. In addition, SNL Fire Protection Engineering must be present before the test-pressure is applied to the system.

2. Hydrostatic testing shall be performed before any ceiling is installed below the sprinkler piping.

3. Each water control valve shall be fully opened and closed under water pressure to ensure proper operation.

4. The addition of sodium silicate (also known as water-glass) and related substances before hydrostatic testing, to stop water leakage, is not permitted.

B. Alarm testing: Contractor shall be responsible for testing new alarms and modified alarms installed under this contract. Defective alarms shall be replaced immediately.

C. Flushing

1. Before connecting sprinkler systems to the main supply, each sprinkler supply line shall be flushed out thoroughly by the sprinkler Contractor in the presence of the SDR and/or SNL Fire Protection Engineering, through an unrestricted opening not less than 102 mm *(4-inches)* in diameter in accordance with NFPA 24.

2. Failure to comply with this requirement shall necessitate flushing of the entire sprinkler system by the hydropneumatic method, by the Contractor at no additional cost to SNL.

3. A temporary pipe or fire hose shall be provided by the Contractor to discharge water to a suitable location, as designated by the SDR.

3.03 PENETRATIONS

A. Penetrations through fire resistance rated construction shall be sealed *in accordance with standard specification Section 07270, "firestop and smokestop systems".* Proposed materials and systems shall be submitted to SNL Fire Protection Engineering for approval.

B. Penetrations through other construction shall be provided with sleeves in accordance with Section 3.01 of this specification.

3.04 PAINTING

No painting will be required on pipe and fittings inside the building by the sprinkler Contractor. However, pipe, sprinklers and fittings will be left clean and free of grease, ready to receive paint by others.

3.05 CLEANUP

A. Maintain the premises free from accumulation waste materials or rubbish caused by this work. Upon completion of the installation, all debris and surplus materials resulting from the work shall be removed from the buildings and site and all areas left broom clean.

3.06 DRAWINGS AND MANUALS

A. Upon completion of the installation and prior to final inspection, the Contractor shall furnish Sandia one direct reproducible set of “As-Built” record drawings and hydraulic calculations. In addition, the Contractor shall furnish two copies of all manuals needed to give complete instruction for operation, inspection, testing, and maintenance of the equipment furnished and installed under this specification.

3.07 GUARANTEE

A. The Contractor shall, as a condition precedent to final payment, execute a written guarantee to Sandia warranting all materials and equipment furnished by him under this contract to remain in satisfactory operating condition (ordinary wear and tear, abuse and causes beyond the control of the Contractor excepted) for a period of one year from the date of the final acceptance of his work. All defects or damages due to faulty materials or workmanship shall be repaired or replaced without delay to Sandia satisfaction and at the Contractor's expense. Repair or replacement operations must start within 24 hrs. of notification.

END OF SECTION

SECTION 15331

AUTOMATIC FIRE SPRINKLER SYSTEM
(NO DESIGN/INSTALL ONLY)

PART 1 - GENERAL

1.01 RELATED DOCUMENTS

A. Drawings and general provisions of contract, including General and Supplementary Conditions and Division 1 Specification sections, apply to work of this section as if repeated herein.

B. Refer to Section 15010, "Basic Mechanical Requirements."

C. Refer to Section 15411, "Water Distribution Piping" for requirements on disinfection of potable water piping.

D. Refer to section 02717 "Site Fire Water System" for requirements pertaining to underground piping.

1.02 DESCRIPTIONS

A. This section includes materials and installation of complete wet pipe automatic fire protection sprinkler system for areas of work as indicated on the contract drawings and specifications.

B. This section includes materials and installation of the fire sprinkler system downstream of the flanged stub-up at the base of the sprinkler riser, unless otherwise noted on contract drawings.

1.03 WORK INCLUDED

A. The work to be performed under this specification shall include providing all shop drawings, equipment, materials, labor and supervision necessary to furnish, install, test, and place in service the fire protection systems as shown on the drawings and as described in these specifications. *The work shall specifically include, but not be limited to, main system riser(s), riser equipment, valves, water flow switches, all interior piping and fittings, fire department connections, all hangers and other supports with fasteners as required for complete installation, main and auxiliary drains, operating instructions, identification, testing, disinfection of piping, and all such other work as may be required to provide complete, fully operable systems in accordance with the current editions of NFPA 13, 14 and 24, and this specification.* Work also includes coordination of work with other trades.

1.04 WORK NOT INCLUDED

A. Electrical work

B. Painting

1.05 SUBMITTALS

A. Submit shop drawings in accordance with the General Provisions.

B. Submit for review complete shop drawings showing the location of all sprinklers and piping. Shop drawings shall conform to the requirements established for working plans as prescribed in NFPA 13, current edition.

C. NO INSTALLATION WILL BE PERMITTED PRIOR TO THE SDR APPROVAL OF COMPLETED SHOP DRAWINGS AND PRODUCT DATA .

D. Submit product data in accordance with Section 01300 for the following, but not limited to, items:

1. Fire sprinklers
2. Water flow switches
3. Pipe hangers, supports and seismic bracing, including fasteners
4. Alarm check valve with trim
5. OS&Y sectional gate valves
6. Fire department connections
7. Valve supervisory switches
8. Flexible and rigid couplings
9. Pipe and fittings
10. Backflow prevention assemblies
11. Check valves
12. Fire hose valves
13. Inspector's test valves
14. Post indicator valves
15. Signs and placards
16. All other system components

E. Drawings shall show all details required or recommended by NFPA 13 plus:
   a. All fire sprinkler drawings will reference the architectural floor plans.
   b. Files will be completed on a one to one scale.
   c. Unless otherwise specified, drawings shall be plotted at ¼ "=1'-0".
   d. Room number and name (if applicable) shall appear in each room.
   e. Potential obstructions (i.e. columns, beams, ductwork, etc.) shall be shown.

f. A legend of symbols used shall be provided.
g. Pipe lengths shall be shown, center to center of fittings.
h. Where more than one type of pipe material is used, each piece of pipe shall be identified as to material type.
i. No lettering will be smaller than 1/8” plotted height.

F. Test reports and certificates including " Contractor's material & test certificate for aboveground piping" and " Contractor's material & test certificate for underground piping" as described in NFPA 13 and NFPA 24, current editions.

G. Upon completion of the work, Contractor shall revise all drawings to agree with the construction as actually accomplished. The notation "As-Built" shall be entered in the revision block, dated and initialed.

1.06 APPLICABLE STANDARDS AND PUBLICATIONS

A. The current edition of the following publications of the issues listed below, but referred to thereafter by basic designation only, form a part of this specification to the extent indicated by the references thereto:

1. National Fire Protection Association (NFPA)

a. NFPA 13 - Standard for Installation of Sprinkler Systems

b. NFPA 14 -Standard for Installation of Standpipe Systems

c. NFPA 24 - Installation of Private Fire Service Mains and Their Appurtenances

d. NFPA 25 – Standard for Inspection, Testing and Maintenance of Water-Based Fire Protection Systems.

2. Factory Mutual System (FM)

a. Factory Mutual Approval Guide

3. Underwriters Laboratories, Inc. (UL)

a. Fire Protection Equipment Directory, with all supplements thereto.

For interpretation of the above NFPA Fire Codes, the “authorities having jurisdiction” referred to in the codes shall be the Sandia Delegated Representative (SDR) and Sandia National Laboratories Fire Protection Engineering.

1.07 DESIGN CRITERIA

A. General

1. The Contractor is responsible for furnishing and installing the automatic sprinkler system in accordance with these specifications and the contract drawings. The Contractor shall coordinate with architectural, mechanical, and electrical, design and construction documents, to ascertain the required information, to effect a properly designed sprinkler system for the building construction and occupancy classification. This coordination includes contacting the appropriate SNL and contract personnel to identify all building areas that may be subject to freezing conditions.

2. The installation of the automatic sprinkler systems shall be complete with all necessary accessories for proper operation. System installation shall reflect high quality professional work that properly accounts for practical maintenance concerns and aesthetic concerns, as well as meets the design density requirements. Departures from this standard of professionals including inefficient designs, unnecessary materials, and special system modifications to meet design density (e.g., reduced spacing the hydraulically remote areas) shall be avoided. The installation shall be performed by a licensed sprinkler Contractor (C-16) regularly engaged in this type of work and supervised by a NICET Level II certified technician. The installation shall be performed in accordance with requirements of the National Fire Protection Association standards (NFPA), Department of Energy, and Sandia National Laboratories.

3. The installation of the fire suppression system shall be complete with all necessary accessories for proper operation and shall include seismic support details and supporting calculations.

4. The fire protection water supply lines, controlling devices, protective devices, alarm systems, supervisory devices, and related equipment shall be complementary to the designed system and Sandia National Laboratories existing fire protection systems.

5. The installation shall comply with all mandatory, advisory interpretations, and recommended applicable rules of the latest editions of the above standards, except where otherwise noted on the drawings or specified herein.

6. Interpretation of this standard specification and its references shall be governed by the SDR and SNL Fire Protection Engineering.

7. The Contractor shall produce drawings that indicate the extent and general arrangement of the automatic sprinkler systems.

1.08 GENERAL REQUIREMENTS

A. Qualifications of the Contractor: The Contractor performing the installation work under this specification shall have a current C-16 license in the State of California for sprinkler installations and shall be regularly engaged in the installation of fire protection sprinkler systems in accordance with NFPA 13.

B. Materials and equipment: Materials and equipment shall be new and current products of respective manufacturers. Where two or more pieces of equipment performing the same function are required, they shall be exact duplicates produced by one manufacturer. Materials and equipment shall conform to the requirements of the Underwriters Laboratories, Inc., and/or the Factory Mutual Engineering Corporation for systems of the type indicated and they shall be used in accordance with the manufacturer's instructions and their UL-listing and/or FM approval. The Contractor shall submit proof that the items furnished under this specification conform to such requirements. The UL label or seal, or listing in the fire protection equipment directory for the service indicated will be acceptable evidence that the items conform to the requirements of the Underwriters Laboratories, Inc. The Factory Mutual label or seal, or listing in the Factory Mutual Approval Guide for the service intended will be acceptable evidence that the items conform to the requirements of the Factory Mutual Engineering Corporation.

PART 2 - PRODUCTS

2.01 MATERIAL

A. Overhead pipe: Sprinkler system pipe within the building shall be black, seamless, standard weight Schedule 40 steel pipe in sizes less than 200 mm *(8-inch)* and Schedule 30 in sizes 200 mm *(8-inch)* and larger, designed to withstand a working pressure of at least 2070 kpa *(300 psi)*. Pipe to conform to ASTM specifications ASTM A-795 and/or ASTM A-53 and NFPA 13. All drain and exterior pipe shall be hot dipped zinc coated (galvanized). Thin wall pipe, light wall pipe, and threadable light wall pipe are prohibited.

B. Pipe fittings: Screwed, flanged, grooved or welded fittings shall be malleable iron or carbon steel and of a type specifically approved for sprinkler systems and designed to withstand a working pressure of not less than 1210 kpa *(175 psi)* cold water pressure in accordance with NFPA 13. All drain and exterior fittings shall be galvanized. Flanged joints shall be made of 1.6 mm *(1/16-inch)* rubber gaskets and square head machine bolts with heavy finished hexagon nuts with dimensions conforming to ANSI B-16.5. Pipe joints shall be cut or rolled, grooved, screwed, or flanged. The use of bushings is prohibited. Push-on, press-fit type and/or any other plain-end type fittings shall not be used.

C. Underground Pipe: See 02717, *Site Fire Water* System for specifications on underground pipe.

D. Gate valves, Angle valves, Globe valves- 50 mm *(2-inch)* and smaller: UL-listed and /or FM approved for fire sprinkler service, body and bonnet of cast bronze, 1210 kpa *(175 psi)*min. cold water working pressure- non- shock, threaded ends.

E. Gate valves, Angle valves, Globe valves- 65 mm *(2-1/2-inch)* and larger: UL-listed and/or FM approved for fire sprinkler service, cast iron body, bronze mounted, 1210 kpa *(175 psi)* min. cold water working pressure- non- shock, solid taper wedge, outside screw and yoke, rising stem, flanged bonnet, with body and bonnet conforming to ASTM A-126 Class B; replaceable bronze wedge facing rings; flanged ends; and a packing assembly consisting of a cast iron gland flange, brass gland, packing, bonnet, and bronze bonnet bushing. Valves shall be capable of being repacked under pressure, with valve wide open. Valves 2-1/2 inch and larger shall be provided with an electrical valve supervisory switch.

F. Check valves: UL-listed and/or FM approved check valves 65 mm *(2-1/2-inch)* and larger shall be flanged cast iron body, bronze mounted, full opening, horizontal swing, rubber faced, rated for 1210 kpa *(175 psi)*, non-shock cold water service. Check valves 50 mm *(2-inch)* and smaller shall be screwed, bronze body and trim, regrinding type, horizontal swing, rated for 1210 kpa *(175 psi)*, non-shock cold water service.

G. Check valves: Alarm check valves and check valves shall be UL-listed and/or FM approved and provided with standard trimmings including pressure gages, alarm switch, testing bypass, and all necessary pipe, fittings, and accessories required for a complete trimming installation, in accordance with NFPA 13.

H. Water flow alarm switches: Paddle-type water flow alarm switch shall be UL-listed and/or FM approved, rated to 1725 kpa *(250 psig);* designed for horizontal or vertical installation; have two (2) single pole double throw (SPDT) circuit switches to provide isolated alarm and auxiliary contacts, 7 ampere 125 volts AC and 0.25 ampere 24 volts DC; complete with factory-set, field-adjustable retard element to prevent false signals, and tamper-proof cover which sends a signal when cover is removed. Electrical wiring by Division 16.

I. OS&Y Valve supervisory switches: The switch shall have tamper proof cover with 2-SPDT contacts, 15 ampere 115 volt AC. UL listed for outdoor use and FM approved. The switch shall be adjusted to operate within two revolutions of the valve stem. Electrical wiring by Division 16. Potter Model OSYB or approved equal.

J. Post Indicator Valve supervisory switches: The switch shall have tamper proof cover with 2-SPDT contacts, 15 ampere 115 volt AC. UL listed for outdoor use and FM approved. Electrical wiring by Division 16. Potter Model PCVS-2 or approved equal.

K. Backflow prevention assembly: Double check type. Preventer assembly shall be approved and listed, for the specific use and orientation for which it is to be installed, by the Foundation for Cross-Connection Control and Hydraulic Research of the University of Southern California, UL and/or FM approved, FEBCO Model 850 for vertical installation no substitution.

L. Drains: Main and auxiliary drains conforming to referenced standards shall be provided for the main risers and for every portion of the system trapped by reason of elevation or feed main routing, such portion involving more than five sprinklers. Drain shall be installed downstream of any sectional valve. Main riser drain shall terminate outside adjacent main riser. In no case shall a direct connection be made to any building drain or the sewer system. Plugs used for auxiliary drains shall be brass.

M. Inspector's Test and Drain valve: UL-Listed and/or FM approved inspector's test and drain valve connections shall be provided, with all valves located so as to be readily accessible. The test apparatus shall include a positive shut-off, self-draining, cleanable sight taps, permanently installed ½" orifice, as manufactured by Potter-Roemer Test and Drain 6100 series or approved equal.

N. Inspector's Test Valve Box: 14 gauge, steel construction with dimensions as noted on the drawings, continuously welded seams, full width mounting flange, full width body flange trough to exclude liquids and contaminants, hidden hinges, 120 degree door opening, gasketed door, self-grounding latch system with integral seals, hasp lock, complete with all mounting nuts, grounding hardware, and sealing washers, primer finish, NEMA 4X rating, as manufactured by Hoffman or approved equal.

O. Fire department connection: Fire department connection shall be UL and/or FM approved, flush type, brass finish, 100 mm *(4-inch)* connection with 65 mm *(2-1/2-inch)* inlets and caps. Hose threads shall be National Standard Hose. Inlets to be approximately 915 mm *(36-inches)* above grade. The completed installation shall include a metal sign or escutcheon plate, with raised lettering, marked "FIRE DEPARTMENT CONNECTION".

P. Signs: All control, drain, and test valves, shall be provided with identification signs in accordance with referenced standards. Signs shall be porcelainized metal. Provide hydraulic information placards at all sprinkler risers.

Q. Gages: Gages shall be minimum 80 mm *(3-inch)* dial, reading approximately mid-scale at normal operating pressure. Provide petcocks and test gage connections per NFPA 13.

R. Sleeves: Pipe sleeves shall be provided where pipes pass through concrete floors, foundations, walls and partitions. Sleeves shall comply with NFPA 13. The

space between the pipe and the sleeve shall be filled with an approved non-combustible flexible packing material. Use fire stopping packing material for penetration through fire-rated walls, ceilings or slabs. The space between the sleeve and wall shall be adequately grouted. Watertight pipe sleeves shall be provided where pipes pass through floors and exterior building walls. Floor sleeves shall terminate 100 mm *(4-inches)* above finished floors. The space between the pipe sleeve shall be packed with a water resistant packing material and the sleeves shall be grouted-in. A suitable collar set in waterproofing mastic shall be installed to form a seal at the intersection of sleeve and finished floor. Exposed pipes passing through walls, partitions and ceilings in finished areas shall be provided with steel or cast iron escutcheon plates painted to match adjacent surfaces.

S. Sprinklers: All sprinklers located 2.1 m *(7 feet)* or less above floor level and other sprinklers subject to mechanical damage shall be provided with sprinkler guards. Sprinklers shall be installed with deflectors parallel to the ceiling or surface above. Sprinklers in finished ceiling areas shall be semi-recessed pendent low profile *white finish* in semi-recessed white escutcheons. Sprinklers in unfinished ceiling areas shall be pendent or upright, bronze finish. Sprinklers exposed to exterior corrosive atmosphere shall be lead coated or of the corrosion-proof type.

Thread and orifice size shall be 15 mm *(1/2-inch)* NPT and standard 15 mm *(1/2-inch)* with a standard "K" factor (~5.6). All sprinklers shall be listed by Underwriters Laboratories and/or approved by Factory Mutual, and shall be Viking Micromatic, or an approved equal. *Provide sidewall sprinklers where indicated.*

Selection of sprinkler temperature ratings shall meet the requirements of NFPA 13. In general, ordinary temperature 57.2-76.7 degrees C *(155-170 degrees F*) sprinklers shall be installed in offices, labs, meeting rooms, lobbies, corridors, and restrooms. Intermediate temperature 79-107 degrees C *(175-225 degrees F)* sprinklers shall be installed in mechanical and electrical equipment rooms, elevator machine rooms, elevator shafts, computer rooms, telephone equipment rooms, electrical closets, closets, loft areas and under canopies. High temperature 141 degrees C *(286 degrees F)* sprinklers shall be installed in stock or storage rooms, boiler rooms and switchgear rooms.

T. Spare sprinklers: At least 6 additional sprinklers of each type sprinkler installed and one wrench for each type sprinkler, as required by NFPA 13, shall be provided to the SDR.

U. Hangers & fasteners: All hanger components shall be of the UL-listed and/or FM approved type. Below concrete construction, inserts, expansion cases or hilti-type drop-ins shall be installed to support the 25 mm through 100 mm *(1-inch through 4-inch)* size sprinkler piping. Below concrete construction, insets shall be installed for all 125 mm *(5-inch)* or larger, or in lieu of the inserts, expansion

cases, spaced not more than 3 m *(10 feet)* apart may be installed in accordance with NFPA 13. Below steel deck and joist construction, use beam clamps, with retaining straps or other approved means to prevent movement, to hang from top chord or joist. Do not hang piping from bottom chord, or bridging. Powder driven studs shall not be used.

V. Insulation:

1. Acceptable Manufacturers: Subject to compliance with requirements, provide products of one of the following:

Armstrong World Industries, Inc.
Babcock & Wilcox; Insulating Products Div.
CertainTeed Corp.
Knauf Fiber Glass GmbH.
Manville Products Corp.
Owens-Corning Fiberglas Corp.
Pittsburgh Corning Corp.

2.Fiberglass Piping Insulation: ½" thickness, ASTM C 547, Class 1 for use to 230ºC *(450 degrees F)*, unless otherwise indicated.

3.Jackets for Piping Insulation: ASTM C 921, Type I (ASJ) for all piping.

a. Encase pipe fittings insulation with one-piece premolded PVC fitting coffers, fastened as per manufacturer's recommendations.

b. Encase exterior piping insulation with corrugated aluminum jacket 0.41mm *(.016")* thick with weather-proof construction and lock bands on 300 mm *(12")* centers.

4.Staples, Bands, Wires and Cement: As recommended by insulation manufacturer for applications indicated. Staples shall be stainless steel.

5.Adhesives, Sealers and Protective Finishes: As recommended by insulation manufacturer for applications indicated.

PART 3 - EXECUTION

3.01 INSTALLATION

A. The Contractor is responsible for the installation of the automatic sprinkler system. The fire protection system installation shall be coordinated with the other trades (mechanical, electrical and structural, etc.).

B. The installation shall be supervised by a technician certified as NICET Level II (minimum) in fire sprinklers.

C. Deviations from contract drawings for sprinkler piping require written approval from the SDR. Written approval shall be on file with the SDR prior to any deviation in the field.

D. For modifications to existing systems, the sprinkler system shall be placed in service at the end of each work day to the maximum extent practical. Coordinate with the SDR.

E. Contamination prevention: Pipe interiors shall be kept free of debris. Piping shall be reamed to remove all burrs, and pipe section shall be cleaned inside to remove all chips, and foreign materials prior to making joints.

F. Underground Supply System: See section 02717 *Site Fire Water System*, for details on installation of underground piping.

G Pipe and Fittings Above Ground:

1. Pipe, fittings, and hangers shall be installed where shown on the drawings and in accordance with NFPA 13.

2. Exposed piping in finished areas shall be installed in a neat and workmanlike manner, and shall be held as close to the structure as possible. Care shall be taken to avoid trapping of any portion of the system by incorrectly pitched pipe. All piping shall be accurately cut to measurements established by the Contractor per approved shop drawings, and shall be worked into place without springing or forcing. In any situation where bending of piping is required, such bending shall be accomplished through the use of a standard pipe bending machine and done in accordance with NFPA 13.

3. Sprinkler piping shall be installed above suspended ceilings except as noted otherwise.

4. Where pipe is exposed to atmosphere or to outdoor weather, (e.g., overhead sprinkler piping, drain and test piping, fire department connection piping, etc.), it shall be galvanized.

5. All pipe smaller than 6-inches diameter subject to outdoor weather shall be insulated with ½" thick fiberglass, see section 2.01V.

6. No cutting, welding or torch work will be permitted in any portion of the building without permission of Sandia SNL Fire Protection Engineering.

7. Welded outlet fittings shall be UL listed or FM approved. The fitting/pipe assembly shall be shop fabricated:

    a. Holes in the pipe for outlets shall be cut to the full inside diameter of the fitting, and shall be installed as such.

    b. The welded fitting may overlap the hole in the pipe by a maximum of 1.2 mm *(3/64-inch)* (based on a fitting with a wall thickness of 5 mm *(3/16-inch)* provided part "a" above is still maintained. Note: the hole cut in the pipe would be 2.4 mm *(3/32-inch)* larger than the full inside diameter of the fitting, a positive tolerance of 2.4 mm *(3/32-inch).* SNL Fire Protection Engineering shall approve all welded outlets before installation.

8. Rigid Joints:

    a. Joints shall be left exposed until final inspection and testing have been witnessed by the SDR and SNL Fire Protection Engineering.

    b. Swing or sprig joints (armover) shall be used for connecting pendent sprinklers to branch lines for branch lines located above lowered ceilings.

    c. Screwed, flanged, or grooved joints in accordance with NFPA 13 are acceptable.

9. Flexible Joints:

    a. Flexible (mechanical groove) joints shall be used in sprinkler risers and in feed mains in accordance with NFPA 13 for protection against earthquake damage.

10. Flanged fittings:

    a. A flanged tapered reducer shall be installed at the flange and spigot piece when the alarm valve is smaller than the underground supply line.

    b. Pipe shall be installed straight and true with no greater deflection at flexible pipe couplings than is recommended by the manufacturer.

    c. Flanged joints shall be face matched. Raised face flanges shall not be mated to flat-face cast-iron flanges on valves or equipment. The raised face must be machined flush. All flange bolt holes shall straddle the horizontal and vertical centerlines unless otherwise noted. The bolts shall be square head machine bolts in heavy-semi-finished hexagonal nuts and shall comply with ANSI B-31.1, power piping. Torque values and

tightening sequence for bolts shall be in accordance with flange manufacturer's instructions.

d. Install insulating kits on flanges connecting dissimilar metals (such as steel to copper) to prevent electrolytic action.

e. Plain end couplings are not acceptable.

11. Pipe Hangers and Anchors:

a. All piping must be substantially supported from building structure and only approved type of hangers shall be used. Piping under ducts shall not be supported from duct work, but shall be supported from building structure with trapeze hangers where necessary or from steel angles supporting duct work in accordance with NFPA 13.

b. Off-sets in hanger rods will not be permitted.

c. Concrete anchors shall be installed by drilling and installing a UL listed or FM approved anchor.

12. Bushings: Bushings are not normally permitted. The SDR and SNL Fire Protection Engineering may approve the use of bushings only when an appropriate reducing fitting is not manufactured.

13. Control Valves:

a. Post indicator control valves, PIV, shall be located a minimum of 12.2 m *(40 feet)* from any structure. Exceptions shall be approved by SNL Fire Protection Engineering.

b. Valves shall be checked during pressure test and stuffing boxes shall be tightened if necessary.

c. Bollards shall be installed around post indicator valves.

d. Post indicator valves shall be installed such that grade mark is level with the finish grade.

e. Control valves shall be provided with identification signs describing the areas protected. Where the valve location is concealed above the ceiling, a sign below the ceiling shall indicate the valve location, and identify the protected area.

f. A pressure gage cock and approved gage shall be installed downstream of interior sectional control valves of 102 mm *(4-inch)* size or larger.

14. Pipe Sleeves:

    a. Pipe sleeves shall be installed and properly secured in place at all points where sprinkler piping passes through concrete or masonry construction. Sleeves through all walls and floors shall provide adequate clearance for slight movement of the piping in accordance with NFPA 13.

    b. Sleeves for pipes passing through floors of concrete or waterproof construction shall project 80 mm to 150 mm *(3-to-6-inches)* above floors to prevent leakage. Sleeves through walls shall be cut flush with each surface unless otherwise specified. Sleeves shall be caulked to make penetration watertight.

    c. Holes through walls, floors, and ceilings of other than concrete or masonry construction shall be large enough to accommodate pipe expansion. Cutting or drilling of the holes shall be carefully done and affected surfaces and structure shall be fully restored to original conditions. All holes through walls, partitions, floors and ceilings shall be neatly machine cut or drilled using tools appropriate for the material being penetrated. Holes through existing concrete floors and walls shall be core drilled to provide clean, neat holes. Any damage to structure, piping, or equipment caused by the Contractor shall be repaired and refinished by skilled mechanics at the trade involved and at no additional cost to Sandia. Spaces between pipe and sleeve or pipe and opening for floors and exterior walls shall be filled with a nonhardening sealant material and made watertight. Where fire rated barriers are penetrated, the sealant and application system shall be UL listed or FM approved to retain the fire resistance rating of the barrier.

15. The cutting of structural members for the passage of sprinkler piping or for pipe-hanger fastenings will not be permitted, except by prior written approval of the SDR.

16. Install finished ceiling and wall plates (piping escutcheons) whenever exposed piping passes through floors, ceilings, and walls.

G. Check valve

1. A check valve shall be installed on each sprinkler riser. These valves shall be provided with standard trimmings, including pressure gages, 50 mm *(2-inch)* system drain.

H. Backflow Prevention

1. A double check backflow prevention assembly (BFP) shall be installed to prevent cross-connection contamination between potable water systems and any fire sprinkler system, at the service connection for the fire sprinkler system.

2. BFP assemblies installed or used under this contract shall be tested by a "certified backflow control assembly tester" who possesses a current (within three (3) years from date of issuance) certificate that confirms successful completion of an approved (SDR specified or USC-FCCCHR) Training Course.

3. BFP assemblies shall be installed in accordance with AWWA Manual M14 requirements, and their listing.

4. Control valves shall be provided.

5. The installation of the BFP shall provide the following:

    a. Easy accessibility for testing and maintenance.

    b. Proper support.

    c. Provision for excessive pressure or thermal expansion downstream.

    d. Placement between 300 mm and 1500 mm *(12-inches and 60-inches)* above finished floor level.
    e. A means to efficiently perform forward flow testing at design flow.

6. Adequate drainage must be provided for BFP to allow for maintenance.

7. The Contractor shall perform an operational test on any new or relocated BFP assemblies used or installed under this contract. Passing backflow preventers shall be labeled with the system designation, location, test performed, tester's initials, and date. All data shall be permanently engraved on a durable plastic or aluminum tag attached to BFP with a chain. Testing documentation shall be submitted to the SDR.

8. Repairs to BFPs shall be made with original manufacturer's parts.

I. Sprinklers

1. Sprinklers below, or recessed in, suspended ceilings shall use a balanced layout that is symmetrical to the space, and parallel to ceiling features, walls, lights, etc. The finish of escutcheon plates shall be aesthetically coordinated with the suspended ceiling.

2. Pendent sprinklers shall be in alignment, and parallel to ceiling fixtures, walls, etc. Sprinklers located in suspended (lay-in-tile) type ceilings shall be centered in the tile unless otherwise noted in design documents. In small rooms (<150 sq. ft.) heads may be located at the ¼ point (intersection of ¼ of the width and ¼ of the length) of the tile.
   Install sprinklers as required by NFPA 13 with regards to ducts, obstructions and partitions.

3. In areas without a suspended ceiling, install sprinkler piping as high as possible, using necessary fittings and auxiliary drains to maintain maximum clear headroom.

4. Pendent sprinklers shall be fed by swing/sprig joints from 25 mm *(1-inch)* fittings in branch lines.

5. Dry pendent and horizontal dry sidewall sprinklers shall only be installed in screwed tee fittings. Use shall be approved by SNL Fire Protection Engineering, prior to design or installation.

6. Sprinklers are required above suspended ceilings. Light hazard spacing may be utilized. Separate hydraulic calculations are not required.

7. Sprinkler head guards shall be provided on all sprinklers located below 2.1 m *(7 feet)* and where potential damage may occur.

8. Sprinklers shall be required above and below pipe racks, multiple raceways and similar obstructions unless otherwise approve by SNL Fire Protection Engineering.

J. Drains

1. Drains shall include, but are not limited to: 50 mm *(2-inch)* main drains and inspector test connections, etc.

2. 50 mm *(2-inch)* drains shall be installed on all main risers and downstream of any interior sectional valves.

3. Inspector's test connections shall be installed on each sprinkler system as near the most hydraulically remote end of the system as possible while meeting operation and aesthetic requirements. These requirements essentially entail placement of the inspector’s test connection in a room or area where a function or the appearance will not be detracted from by the location or presence of this piping and related valve(s) and signage. The orifice shall be sized to discharge a flow equivalent to the smallest orifice sprinkler in the system. The inspector's test valve shall be located not more than 1.8 m *(6*

feet) above the floor in a visible, easily accessible location. In multi-level buildings where water flow alarm devices are provided for each floor or where more than one alarm device is provided in a single sprinkler system, a separate inspector's test connection shall be provided for each alarm device. In multi-level buildings where more than one inspector's test connection is required, all the valves shall be manifolded together at a single location on the grade floor, with a sight glass and a common drain line discharging outdoors. Where the inspector's test connection is to be located in a room with a door, the room shall be readily accessible (e.g., no combination locks, etc.). The Inspector's test line shall terminate outdoors to a safe location and be provided with a concrete splash block.

4. Drains shall be piped to discharge to the outside. Drains shall be run through the walls as close to the floor or grade line as possible, terminating with a 45-degree elbow turned down to splash blocks.

5. A 20 mm *(3/4-inch)* valved auxiliary drain with standard hose threads and caps shall be installed at all low points in the system, where more than five sprinklers are trapped. Where the capacity of trapped piping exceeds 75 l (20 gallons), the overflow shall be piped to drain. Drains which cannot be piped to the outside shall be piped to a drain, sump, etc. Which is approved for such use and volume. Approval shall be by the SDR and SNL Fire Protection Engineering. A sight glass shall be provided if discharge is not visible.

6. Concrete splash blocks, 0.5 m x 0.5 m x 0.1 m *(18" x 18" x 4")* minimum in size, shall be installed under each drain or test outlet. The top of the block shall be 25.4 mm *(1-inch)* above grade, with a slope of 12.7 mm/m *(1/2-inch per foot)* away from the building wall.

K. Fire Department Connections

1. Fire department connections shall be installed at each new alarm valve and main system riser.

2. Fire department connections shall have a minimum of two 65 mm *(2-1/2-inch)* inlets with national standard hose threads, internal double clapper check valve, brass plugs (with attached chains) or caps the check valve and normally open automatic ball drip (ABD) shall be located at points where they will not be subject to freezing temperatures, and the discharge from the ball drip shall be piped to drain. Refer to Section 3.05, drains. The ball drip shall close when the flow of water through the valve is in the range of 0.25 to 0.6 l/s (4 through 10 gpm). All ball drips shall be rated at 1210 kpa *(175 psi).* Use valved drains in place of automatic ball drip drains when the static head of water above the ABD will exceed 3.5 m *(11'-6")* 34 kpa *(5 psi)*. Check valves shall be UL listed or FM approved and shall have bodies with the UL or FM stamp.

3. The fire department connection shall be installed between 0.5 m and 1.0 m *(18-inches and 36-inches)* above grade. When the centerline of pipe opening is located between 0.75 m and 1 m *(24-inches and 36-inches)* above grade, and only under this condition, a 45-degree-type fire department connection shall be installed.

4. The completed installations shall include a metal escutcheon plate, with raised lettering, marked "FIRE DEPARTMENT CONNECTION STANDPIPE-AUTO. SPKR," "AUTOMATIC SPKR," or "STANDPIPE," as appropriate.

5. Fire department connections shall be located on the fire department access side of the building and within 15.2 m *(50 feet)* of a fire hydrant.

L. Identification

1. Each sprinkler riser or water flow supervisory device shall be identified to the zone/area which it serves.

2. Material shall be durable plastic or aluminum. Lettering shall be white on a red background. Minimum height of lettering is 3 mm *(1/8-inch).*

3. Contractor shall furnish and install a cabinet containing maintenance and repair equipment (spare heads, wrench, etc.) at a location specified by the SDR.

M. Earthquake Protection

1. Sprinkler system piping shall be protected to prevent pipe breakage during an earthquake in accordance with NFPA 13.

2. Approved sway bracing shall be provided for risers, mains, feed mains and cross mains.

3. Provide approved flexible (mechanical grooved) pipe couplings for risers and all piping 65 mm *(2-1/2-inch)* or large in accordance with NFPA 13.

4. Branch lines shall be restrained against excessive movement in accordance with NFPA 13.

N. Flushing Connections

1. Provide flushing connections on all cross mains in accordance with NFPA 13.

3.02 ACCEPTANCE

Arrangement with Sandia for final inspections and witnessing of tests shall be made at least 5 working days prior to any tests and flushing.

All tests shall be conducted in the presence of the SDR and SNL Fire Protection Engineering.

A. Hydrostatic Tests-Aboveground:

1. After flushing system test fire sprinkler piping hydrostatically, for a period of 2 hours, at not less than 1380 kpa *(200 psi).* in accordance with NFPA 13. Check system for leakage at joints or a drop in pressure. Measure hydrostatic pressure at low point of each system or zone being tested. Replace all piping system components that do not pass the test procedures specified. All tests shall be performed when SDR is present. In addition, SNL Fire Protection Engineering must be present before the test-pressure is applied to the system.

2. Hydrostatic testing shall be performed before any ceiling is installed below the sprinkler piping.

3. Each water control valve shall be fully opened and closed under water pressure to ensure proper operation.

4. The addition of sodium silicate (also known as water-glass) and related substances before hydrostatic testing, to stop water leakage, is not permitted.

B. Alarm testing: Contractor shall be responsible for testing new alarms and modified alarms installed under this contract. Defective alarms shall be replaced immediately.

C. Flushing

1. Before connecting sprinkler systems to the main supply, each sprinkler supply line shall be flushed out thoroughly by the sprinkler Contractor in the presence of the SDR and/or SNL Fire Protection Engineering, through an unrestricted opening not less than 102 mm *(4-inches)* in diameter in accordance with NFPA 24.

2. Failure to comply with this requirement shall necessitate flushing of the entire sprinkler system by the hydropneumatic method, by the Contractor at no additional cost to SNL.

3. A temporary pipe or fire hose shall be provided by the Contractor to discharge water to a suitable location, as designated by the SDR.

3.03 PENETRATIONS

A. Penetrations through fire resistance rated construction shall be sealed *in accordance with standard specification Section 07270*, *"firestop and smokestop systems"*. Proposed materials and systems shall be submitted to SNL Fire Protection Engineering for approval.

B. Penetrations through other construction shall be provided with sleeves in accordance with Section 3.01 of this specification.

3.04 PAINTING

No painting will be required on pipe and fittings inside the building by the sprinkler Contractor. However, pipe, sprinklers and fittings will be left clean and free of grease, ready to receive paint by others.

3.05 CLEANUP

A. Maintain the premises free from accumulation waste materials or rubbish caused by this work. Upon completion of the installation, all debris and surplus materials resulting from the work shall be removed from the buildings and site and all areas left broom clean.

3.06 DRAWINGS AND MANUALS

A. Upon completion of the installation and prior to final inspection, the Contractor shall furnish Sandia one direct reproducible set of "As-Built" record drawings and hydraulic calculations. In addition, the Contractor shall furnish two copies of all manuals needed to give complete instruction for operation, inspection, testing, and maintenance of the equipment furnished and installed under this specification.

3.07 GUARANTEE

A. The Contractor shall, as a condition precedent to final payment, execute a written guarantee to Sandia warranting all materials and equipment furnished by him under this contract to remain in satisfactory operating condition (ordinary wear and tear, abuse and causes beyond the control of the Contractor excepted) for a period of one year from the date of the final acceptance of his work. All defects or damages due to faulty materials or workmanship shall be repaired or replaced without delay to Sandia satisfaction and at the Contractor's expense. Repair or replacement operations must start within 24 hrs. of notification.

END OF SECTION

SECTION 15400

PLUMBING - GENERAL

PART 1 - GENERAL

1.01 RELATED DOCUMENTS

A. Drawings and general provisions of Contract, including General and Supplementary Conditions and Division 1 Specification sections, apply to work of this section as if repeated herein.

1.02 DESCRIPTION

A. The work included under this section of the specifications shall include complete plumbing systems as shown on the drawings, schedules, and as specified herein. Provide all supervision, labor, material, equipment, machinery, and other items necessary to complete the installation of the plumbing systems.

B. The specifications and the drawings call for finished work, tested, and ready for use and operation by Sandia. Wherever the word "provide" is used, it shall mean "furnish and install complete and ready for use."

C. Minor details not usually shown or specified, but necessary for the proper installation and operation of the plumbing systems shall be included in the work at no additional cost to Sandia.

1.03 CODES AND STANDARDS

A. Plumbing Code Compliance: Comply with the latest version of the Uniform Plumbing Code.

B. ANSI Compliance: Comply with American National Standards ANSI A117.1, pertaining to products and installation of plumbing fixtures.

C. PDI Compliance: Comply with applicable Plumbing and Drainage Institute Standardspertaining to products and installation of plumbing systems.

D. ARI Compliance: Comply with ARI Standard 1010 "Drinking Fountains and Self-contained Mechanically Refrigerated Drinking Water Coolers."

PART 2 - PRODUCTS

2.01 MATERIALS

A. Fixtures, equipment and materials have been selected for this project and only items meeting the specifications will be accepted.

B. Plumbing fixtures shall be water saver type.

PART 3 - EXECUTION

3.01 INSTALLATION

A. Install fixtures, equipment and materials in accordance with manufacturer'spublished instructions, details shown on the drawings and with recognized industry practices.

B. Coordinate work with other trades to avoid conflicts in construction.

END OF SECTION

SECTION 15405

SOIL, WASTE, AND VENT PIPING SYSTEMS

PART 1 - GENERAL

1.01 RELATED DOCUMENTS

A. Drawings and general provisions of Contract, including General and Supplementary Conditions and Division 1 Specification sections, apply to work of this section as if repeated herein.

1.02 DESCRIPTION

A. Provide complete soil, waste and vent piping system including, but not limited to, drain piping, soil stacks, vent stacks, combined stacks, laterals, branch vents, and drain piping from all drains and fixtures.

B. Coordinate work with other trades for space requirements.

C. The extent of the soil, waste and vent piping is indicated by drawings and schedules, and by requirements of this section.

D. Submit manufacturer's specifications, data sheets and installation instructions.

E. Refer to Section 15493, "LABORATORY DRAINAGE SYSTEMS" for materials and installation differences.

1.03 CODE REQUIREMENTS

A. System shall comply with the International Plumbing Code.

PART 2 - PRODUCTS

2.01 PIPE AND FITTINGS

A. Below ground to a point 1.2m (5 feet) outside the building:

1. Service weight, hub and spigot cast iron soil pipe and fittings conforming to ASTM A-74.

2. Service weight, bell and spigot cast iron soil pipe and fittings conforming to ASTM A-74.

B. Above Ground:

1. Hubless cast iron soil pipe and fittings conforming to Cast Iron Soil Pipe Institute Specification 301 and 310.

2. Service weight, hub and spigot cast iron soil pipe and fittings conforming to ASTM A-74.

3. DWV copper tube, ASTM B 306, type DWV hard drawn with soldered wrought copper drainage fittings. Joints in accordance with AWS "soldering Manual".

2.02 CLEANOUTS

A. Specification grade with brass plugs as follows:

LOCATION	JOSAM NO.	ZURN NO.
Grade	58450-15	Z-1420-25
Equipment Room Floors	58450-1F	Z-1420-24
Finished Floors	58220	Z-1400-3
Unfinished Floors	58400	Z-1415-2
Carpeted Floors	58400-14	Z-1400-14
Dry Walls	58710-22	Z-1440-1
Tile Walls	58740-22	Z-1440-3

B. Furnish wrench for removal of plugs.

2.03 DRAINS

A. Provide drains as indicated in Plumbing Drain Schedule.

PART 3 - EXECUTION

3.01 INSTALLATION

A. Generally install horizontal drainage piping with slope not less than 6.4 mm per 0.3 m *(1/4" per foot)* for 80 mm *(3")* and smaller and at 3.2 mm per 0.3 m *(1/8" per foot)* for 100 mm *(4")* and larger. Permission for lesser slope may be requested when required provided computed velocity is at least 0.6 m/s*(2 feet per second)*.

B. Hangers for cast iron soil pipe: Cast iron soil pipe shall be supported with not less than one clevis type hanger per pipe section located close to the hub or coupling. Support fittings to maintain alignment.

C. Cleanouts: Provide cleanouts where indicated on the drawings, at each change in direction in soil, waste and drain lines, and at not more than 15 m *(50')* intervals on all straight runs within the building, and extend flush with finished floor for piping concealed above suspended ceilings and through face of toilet room walls from soil piping concealed in pipe shafts. Fittings shall be long sweep bends, cleanout tees or combination Y and 1/8th bends. Plugs shall be heavy cast brass set with graphite and oil compound. Covers shall be flush with walls or floors and brass plugs shall be so located and installed that they are readily accessible for removal.

D. Joints:

1. Joints for cast iron soil pipe and fittings with hubs and spigots shall be made with double seal elastomeric compression type gaskets conforming to ASTM C564.

2. Joints for hubless cast iron soil pipe fittings shall be made with mechanical couplings with neoprene gasket and all stainless steel shield and clamps. Gaskets shall conform to ASTM Std. C-564, and CISPI Standard 310.

E. Do not enclose, cover, or put into operation drainage and vent piping system until it has been inspected and approved by the SDR. Notify SDR at least 24 hours in advance to the time such inspection must be made.

3.02 TESTS

A. Tests shall be witnessed by Sandia Delegated Representative. Notify SDR at least 24 hours in advance of testing.

B. The entire soil, waste and vent system shall be hydrostatically tested. The test shall comprise the plugging of all openings in the soil, waste and vent lines, filling the system, or portion thereof, with water to the roof level or a minimum of 3 m *(10 feet)* until all joints are proven tight.

C. Maintain test during backfill operations.

D. Retest prior to placing slabs.

E. Repair all leaks and defects using new materials and retest system or portion thereof until satisfactory results are obtained.

F. Prepare inspection and test report signed by contractor. Submit to SDR.

END OF SECTION

SECTION 15406

STORM DRAINAGE SYSTEMS

PART 1 - GENERAL

1.01 RELATED DOCUMENTS

A. Drawings and general provisions of Contract, including General and Supplementary Conditions and Division 1 Specification sections, apply to work of this section as if repeated herein.

1.02 DESCRIPTION

A. Provide a complete storm drainage system as shown on the drawings, schedules, and specified herein. Coordinate storm drainage system with architectural, structural, and civil requirements of the project. Storm drainage system shall be considered interior to a point 1.5 m *(5 feet)* beyond the building walls, unless indicated otherwise.

B. Comply with requirements of International Plumbing Code.

C. Submit manufacturer's data for piping materials and products.

PART 2 - PRODUCTS

2.01 PIPE AND FITTINGS

A. Below ground to a point 1.2m (5 feet) outside the building: Service weight, hub and spigot cast iron soil pipe and fittings conforming to ASTM A-74.

B. Above Ground: Hubless cast iron soil pipe and fittings conforming to Cast Iron Soil Pipe Institute Specification 301 and 310.

C. Roof, deck, and area drains: See Plumbing Drain Schedule.

D. Cleanouts, and expansion joints shall be compatible with piping material.

PART 3 - EXECUTION

3.01 INSTALLATION

A. Install piping of the sizes shown on drawings. Install piping parallel or perpendicular to the building construction. Allow for expansion. When pipe is installed underground, excavate to a minimum depth to accomplish the grade

shown or required by code. Underground pipe shall have bearing along its entire length.

B. Support vertical risers at each floor line with steel pipe riser clamps. Support horizontal pipe from the building structure with clevis type hangers. Fasten pipe supporting devices to structure with clamps and inserts compatible with structure.

C. Furnish one wrench for removal of plugs.

D. Hangers for cast iron soil pipe: Cast iron soil pipe shall be supported with not less than one clevis type hanger per pipe section located close to the hub or coupling. Support fittings to maintain alignment.

E. Cleanouts: Provide cleanouts where indicated on the drawings. Plugs shall be heavy cast brass set with graphite and oil compound. Covers shall be flush with walls or floors and brass plugs shall be so located and installed that they are readily accessible for removal.

F. Joints:

1. Joints for cast iron soil pipe and fittings with hubs and spigots shall be made with double seal elastomeric compression type gaskets conforming to ASTM C564.

2. Joints for hubless cast iron soil pipe fittings shall be made with mechanical couplings with neoprene gasket and all stainless steel shield and clamps. Gaskets shall conform to ASTM std. C-564, and CISPI Standard 310.

3.02 TEST

A. Hydrostatically test the entire storm drainage system. The test shall comprise the plugging of all openings in the system, filling the system, or portion thereof, with water to the roof level or a minimum of 3 m *(10')*, until all joints are proven tight.

END OF SECTION

SECTION 15411

WATER DISTRIBUTION PIPING

PART 1 GENERAL

1.01 RELATED DOCUMENTS

A. Drawings and general provisions of Contract, including General and Supplementary Conditions and Division 1 Specification sections, apply to work of this section as if repeated herein.

1.02 DESCRIPTION

A. This section specifies the water distribution piping system, including potable cold, hot, and recirculated hot water piping, and fittings to a point 1.5m (5 feet) outside the building.

1.03 SUBMITTALS

A. Refer to Division 1 and Basic Mechanical Requirements for administrative and procedural requirements for submittals.

B. Product Data: Submit manufacturer's product data for all material.

1.04 CODES AND STANDARDS

A. Plumbing Code Compliance: Comply with the International Plumbing Code.

B. ASME Compliance:

1. Safety valves and pressure vessels shall bear the appropriate ASME stamp.

2. Qualify welding processes and welding operators in accordance with ASME Boiler and Pressure Vessel Code, Section ix, "Welding and Brazing Qualifications."

3. ASME B31.9 "Building Services Piping" for materials, products, and installation.

PART 2 PRODUCTS

2.01 PIPE AND FITTINGS

A. Piping within the building above and below ground to a point 1.5 m (5 feet) outside the building:

1. Pipe Sizes 100 mm (4") and Smaller: Copper tubing. Conform to ASTM B88, Type L, hard temper, copper tube; ANSI B16.22 streamlined pattern wrought-copper fittings, with soldered joints using 95-5 tin-antimony solder and procedure specified in ANSI B9.1. Lead solders are not permitted. Below ground piping shall be wrapped with 10 mil tape.

2.02 VALVES

A. Gate, globe, angle, ball, butterfly, check, balancing and drain valves are specified in Section 15100 of Division 15.

2.03 BACKFLOW PREVENTION ASSEMBLY (NON-FIRE RISER)

A. Reduced pressure principle type. Preventer assembly shall be approved and listed for the specific use and orientation for which it is to be installed, by Foundation for Cross-Connection Control and Hydraulic Research of the University of Southern California, UL and/or FM approved, FEBCO Model 860, no substitutions.

1. A reduced pressure backflow prevention assembly (RPBP) shall be installed to prevent cross contamination between potable water systems and any other water system.

2. RPBP assemblies installed or used under this contract shall be tested by a “certified backflow control assembly tester” who possesses a current (within three (3) years from date of issuance) certificate that confirms successful completion of an approved (SDR specified or USC-FCCCHR) Training Course.

3. RPBP assemblies shall be installed in accordance with AWWA Manual M14 requirements and their listing.

4. Control valves shall be provided.

5. The installation of RPBP shall provide the following:

a. Easy accessibility for testing and maintenance.

b. Proper support.

c. Provision for excessive pressure or thermal expansion downstream.

d. Placement between 12-inches and 60-inches above grade level.

6. The contractor shall perform an operational test on all new RPBP assemblies with the system designation, location, test performed, tester’s initials, and date. All data shall be permanently engraved on a durable plastic or aluminum tag attached to RPBP with a chain. Testing documentation shall be submitted to SDR.

7. Any repairs to RPBPs shall be made with original manufacturer's parts.

2.04 WATER METER

A. Magnetic drive turbine meter with internal strainer, tamper-proof moisture resistant register, bronze case, AWWA C701 Class 1, Neptune High Performance Turbine Meter (1 1/2" – 10") with Neptune TRICON-S Register impulse transmitter having 0.5 amp SPDT switch rating at 250 VDC (10 gallons per pulse).

PART 3 EXECUTION

3.01 EXAMINATION

A. Verify all dimensions by field measurements. Verify that all water distribution piping may be installed in accordance with pertinent codes and regulations, the original design, and the referenced standards.

B. Examine rough-in requirements for plumbing fixtures and other equipment having water connections to verify actual locations of piping connections prior to installation.

3.02 PIPING INSTALLATION

A. Refer to the Division 15 Section 15050, "BASIC MECHANICAL MATERIALS AND METHODS", for general piping installation instructions.

B. General Locations and Arrangements: Drawings (plans, schematics, and diagrams) indicate the general location and arrangement of the piping systems. Location and arrangement of piping layout take into consideration pipe sizing and friction loss, expansion, and other design considerations.

C. Install shutoff valve at service entrance inside building; complete with strainer, pressure gage, and test tee with valve.

D. Sectional Valves: Install sectional valves on each branch and riser, close to main, where branch or riser serves 2 or more plumbing fixtures or equipment connections, and elsewhere as indicated.

E. Shutoff Valves: Install shutoff valves on inlet of each plumbing equipment item, and on inlet of each plumbing fixture, and elsewhere as indicated.

F. Extend water distribution piping to connect to water service piping, of size and in location indicated for service entrance to building.

G. Install sleeve and mechanical sleeve seal at penetrations through foundation wall for watertight installation.

H. Make changes in pipe sizes with reducing fittings. Use of long screw fittings, street ells and bushings will not be permitted. Provide copper to steel insulating adapters where non-ferrous piping joins ferrous piping.

I. Cross-connections and interconnections: No plumbing fixtures, devices or piping shall be installed that will provide a cross-connection or interconnection between a potable water supply and a polluted supply or waste such as a drainage system or a soil or waste pipe so as to make possible the backflow or back-siphonage of sewage or polluted water into the potable water supply system.

3.03 FIELD QUALITY CONTROL

A. Inspections: Do not enclose, cover, or put into operation water distribution piping system until it has been inspected and approved by the SDR. Notify the SDR at least 24 hours prior to the time such inspection must be made. Perform tests specified below in the presence of the SDR.

1. Rough-In Inspection: Arrange for inspection of the piping system before concealed or closed-in after system is roughed-in, and prior to setting fixtures.

2. Final Inspection: Arrange for a final inspection by the SDR to observe the tests specified below.

B. Reinspections: Whenever the SDR finds that the piping system will not pass the test or inspection, make the required corrections and arrange for reinspection by the SDR.

C. Reports: Prepare inspection reports, signed by the contractor. Submit reports to Sandia Delegated Representative.

D. Piping System Test:

1. Test for leaks and defects in all new water distribution piping systems and parts of existing systems, which have been altered, extended or repaired. If testing is performed in segments, submit a separate report for each test, complete with a diagram of the portion of the system tested.

2. Leave uncovered and unconcealed all new, altered, extended, or replaced water distribution piping until it has been tested and approved. Expose all such work for testing, that has been covered or concealed before it has been tested and approved.

3. Cap and subject the piping system to a static water pressure of 150% of above the operating pressure without exceeding the pressure rating of the piping system materials. Isolate the test source and allow to stand for a period of two hours. Leaks and loss in test pressure constitute defects which must be repaired.

4. Repair all leaks and defects using new materials and retest system or portion thereof until satisfactory results are obtained.

5. Prepare reports for all tests and required corrective action.

3.04 CLEANING AND DISINFECTING

A. Purge all new water distribution piping systems and parts of existing systems, which have been altered, extended, or repaired prior to use. The cleaning and disinfecting shall be performed by a contractor specializing in sterilization work.

B. Use the purging and disinfecting procedure described in either AWWA C651, or AWWA C652, or as described below:

1. Flush the piping system with clean, potable water until dirty water does not appear at the points of outlet.

2. Fill the system or part thereof, with a water/chlorine solution containing at least 50 parts per million of chlorine. Isolate (valve off) the system, or part thereof, and allow to stand for 24 hours.

3. Drain the system, or part thereof, of the previous solution, and refill with a water/chlorine solution containing at least 200 parts per million of chlorine and isolate and allow to stand for 3 hours.

4. Following the allowed standing time, flush the system with clean potable water until chlorine content is less than 0.2 PPM in the water coming from the system.

5. Submit water samples in sterile bottles to the SDR. Repeat the procedure if the biological examination made by the authority shows evidence of contamination.

C. Reports: Prepare reports for all purging and disinfecting activities. Provide certificate and California Analysis on bacteriological certifying that domestic water system has been properly disinfected.

END OF SECTION

SECTION 15430

PLUMBING SPECIALTIES

PART 1 - GENERAL

1.01 RELATED DOCUMENTS

A. Drawings and general provisions of Contract, including General and Supplementary Conditions and Division 1 Specification sections, apply to work of this section as if repeated herein.

1.02 DESCRIPTION

A. Provide Plumbing Specialties as shown on the drawings and in accordance with the specifications.

1.03 SUBMITTALS

A. Submit manufacturer's catalog data, specifications, installation instructions, capacity and ratings.

PART 2 - PRODUCTS

2.01 BACKFLOW PREVENTER (REDUCED PRESSURE)

A. Reduced pressure type, size and capacity as noted on the drawings.

B. Refer to Section 15330 "AUTOMATIC FIRE SPRINKLER SYSTEM".

2.02 WATER HAMMER ARRESTERS

A. Bellows type, with stainless steel casing and bellows, pressure rated for 1725 kpa *(250 psi)*, tested and certified in accordance with PDI Standard WH-201.

2.03 FLEXIBLE CONNECTORS

A. Stainless steel bellows with a woven flexible bronze wire reinforcing protective jacket; rated for 1035 kpa *(150 psi)* water working pressure, 121 deg. C *(250 deg F)* operating temperature and suitable for up to maximum 20 mm *(3/4")* misalignment. Connectors shall be a minimum of 300 mm *(12")* long and have threaded or flanged ends; sweat ends are not acceptable.

2.04 HOSE BIBBS AND CONNECTIONS

A. Non-freeze ground hydrant type, bronze body, renewable composition disc, 20 mm *(3/4 inch)* solder inlet, hose outlet conforming to ASME B1.20.7. Jay R.

Smith model 5810, Zurn or approved equal. Provide with vacuum breaker, cast iron valve box, hinged locking cover, "water" cast on cover, and drain holes in box and valve housing.

2.05 WALL HYDRANTS (BOX TYPE)

A. Anti-contamination type with vacuum breaker backflow preventer, chrome finish on brass casting, 20 mm *(3/4")* hose thread nozzle, 20 mm *(3/4")* copper tube inlet, copper tube casing, permanent valve seat, hardened stainless steel operating rod. Hydrant shall be enclosed in a flush mounting cast brass box with locking cover. Provide loose tee key with each hydrant. Face dimensions to fit two courses of standard brick. Woodford Mfg. Co. Model B74.

2.06 ELECTRIC WATER HEATER (POINT OF USE TYPE)

A. Heater shall comply with California code of regulations. Provide with automatic temperature control, temperature and pressure relief valve and other safety features. Electrical wiring by Division 16.

1. Unit shall be "point of use" type, 23 l *(6 gallon)* capacity, rated 2,000 watts, 208 volt, single phase, 60 HZ, UL listed. Ruud model PEP6-1, Rheem or approved equal.

2.07 POTABLE WATER FILTERS

A. Provide water filters as shown on the drawings, schedules and as specified.

B. Filter shall be a two-part unit consisting of a permanently-mountable head assembly, with integral shut-off valve and mounting bracket, and a disposable pressure cartridge which installs into the head.

C. Head Assembly: Forged brass interior, the only part in head assembly in contact with water. Chrome plated exterior. Die cast aluminum ring which holds cartridge shall be bright dipped and epoxy coated for corrosion protection.

D. Quick-Change Cartridge: Aluminum pressure vessel, with a bonded lining of polyolefin, sealed to an ABS top cap. Contains an inert septum and a blend of water filtering materials which include activated carbon.

E. Maximum water temperature at inlet: 38 deg. C *(100 F)*.
Maximum pressure: 865 kpa *(125 psi)*, non-shock
Flow Rate: 0.03 l/s *(1/2 GPM)*
Tested & Capacity: 5678 l *(1500 gal)*

F. Units shall be Everpure, Inc., Model No. S-100, meeting NSF Standards No. 42 and 53.

2.08 DEIONIZED WATER SYSTEM

A. System shall provide Type 1 Reagent Grade water. System shall have a .2 micron final filter, resistivity meter, pressure regulator, mounting bracket, manifold cartridges and recirculating pump.

B. Performance:

1. Maximum flow rate: .0.03 l/s (5 GPM)

2. Maximum inlet pressure: 690 kpa (100 PSI)

3. Minimum inlet pressure: 105 kpa (15 PSI)

4. Inlet temperature range: 4.4 - 48.9 deg. C (40-120 F)

5. Inlet connection: 6.4 mm (1/4" OD) Tubing

6. Outlet connection: Faucet block

C. Manufacturer: Barnstead Co., Model No D-3794, 4 Module, 120 Volt AC, 60 Hz, Ultrapure cartridge D-0809, Final filter D-3749, and D-3782 recirculating pump.

PART 3 - EXECUTION

3.01 INSTALLATION

A. Install plumbing specialties in accordance with manufacturers published instructions, details shown on the drawings and with recognized industry practices.

B. Coordinate work with other trades to avoid conflicts in construction.

END OF SECTION

SECTION 15440

PLUMBING FIXTURES

PART 1 - GENERAL

1.01 RELATED DOCUMENTS

A. Drawings and general provisions of Contract, including General and Supplementary Conditions and Division 1 Specification sections, apply to work of this section as if repeated herein.

1.02 DESCRIPTION

A. The extent of plumbing fixture work is indicated by drawings, details and schedules, and by requirements of this section. Provide all supervision, labor, material, equipment, machinery, and other items necessary to complete the installation of plumbing fixtures.

1.03 QUALITY ASSURANCE

A. Manufacturers: Provide products produced by one of the following:

1. Plumbing Fixtures: American Standard Co., Bradley Corp., Crane Company, Eljer Plumbingware, Elkay Manufacturing Company, Fiat, Haws, Kohler Company, or Speakman.

2. Fixture Accessories: As scheduled, or specified.

B. ANSI Standards: Comply with applicable ANSI standards pertaining to plumbing fixtures and systems including ANSI A117.1 standard pertaining to plumbing fixtures for the handicapped.

C. PDI Compliance: Comply with standards established by Plumbing and Drainage Institute pertaining to plumbing fixture supports.

D. Public Law 90-480: Architectural Barriers Act of 1968.

1.04 SUBMITTALS

A. Submit manufacturer's specifications for plumbing fixtures and trim, including catalog cut of each fixture type and trim item furnished, roughing-in dimensioned drawings, fixture carriers, and installation instructions.

PART 2 - PRODUCTS

2.01 PLUMBING FIXTURES

A. General: Provide factory-fabricated fixtures of the type, style and material indicated. For each type fixture, provide fixture trim, carriers, seats, and valves as indicated, and as required for a complete installation. The manufacturer's catalog numbers indicated have been selected to establish a standard of quality for this project. Fixtures and trim of similar appearance, comparable quality and performance may be proposed. Fixtures shall be water saver type.

B. Refer to Plumbing Fixture Schedule.

2.02 FITTINGS, TRIM, AND ACCESSORIES

A. Toilet Seats: elongated, solid white plastic, closed back/open front, less cover, and having stainless steel check hinge and replaceable bumpers.

B. Supplies and Stops for Lavatories and Sinks: polished chrome-plated, loose-keyed angle stop having 15mm *(1/2")* inlet and 9.5 mm *(3/8")* O.D. x 300 mm *(12")* long flexible tubing outlet, and wall flange and escutcheon.

C. Traps: 17 gauge cast brass, chrome plated, 32 mm *(1-1/4")* adjustable "P" trap with cleanout and waste to wall; 40 mm *(1-1/2")* for sinks.

D. Escutcheons: chrome-plated cast brass with set screw or chrome- plated sheet with friction clips.

E. Vacuum Breakers: Provide with flush valves and where required by governing regulations, including locations where water outlets are equipped for hose attachment.

F. Carriers: Provide supports for fixtures of either graphitic gray iron, ductile iron, or malleable iron. Manufacturer: Josam, Smith or Zurn without slotted bolt holes.

G. Fixture Bolt Caps: Provide manufacturer's standard exposed fixture bolt caps finished to match fixture finish.

PART 3 - EXECUTION

3.01 EXAMINATION

A. Verify all dimensions by field measurements. Verify that all plumbing fixtures may be installed in accordance with pertinent codes and regulations, the original design, and the referenced standards.

B. Examine rough-in for potable water and waste piping systems to verify actua locations of piping connections prior to installing fixtures.

C. Examine walls, floors, and cabinets for suitable conditions where fixtures are to be installed.

3.02 INSTALLATION

A. Install plumbing fixtures level and plumb, in accordance with fixture manufacturer's written instructions, rough-in drawings, and pertinent codes and regulations, the original design, and the referenced standards.

B. Comply with the installation requirements of ANSI A117.1 and Public Law 90-480 with respect to plumbing fixtures for the physically handicapped.

C. Fasten plumbing fixtures securely to supports or building structure. Secure supplies behind or within wall construction to provide very rigid installation. Movement of flush valves is not acceptable.

D. Fixture Backing: Provide proper backing for each wall hung plumbing fixture at time of rough-in. Backing shall be 6.4 mm *(1/4")* by 150 mm *(6")* wide steel plate welded or bolted to one stud beyond the first and last fixture mounting point. Fixture hanger or mounting arms shall be attached to the backing plate. When factory-fabricated carriers are specified, backing plates shall be omitted.

E. Wall hung fixtures shall be grouted between wall and fixture with a nonhardening white sealant.

F. All exposed metal parts shall have polished chrome-plated finish unless indicated otherwise.

G. Polished chrome or other exposed finishes shall not show tool marks.

3.03 FIELD QUALITY CONTROL

A. Test fixtures to demonstrate proper operation upon completion of installation and after units are water pressurized. Replace malfunctioning units, then retest.

B. Inspect each installed unit for damage. Replace damaged fixtures.

3.04 ADJUSTING

A. Adjust water pressure at drinking fountains, faucets, shower valves, and flush valves to provide proper flow and stream.

3.05 CLEANING AND PROTECTION

A. Clean fixtures, trim, and strainers using manufacturer's recommended cleaning methods and materials.

B. Provide protective covering for installed fixtures, water coolers, and trim.

C. Do not allow use of fixtures for temporary facilities by contractor personnel. Block and/or lock if necessary

END OF SECTION

SECTION 15445

ELECTRIC WATER COOLERS

PART 1 - GENERAL

1.01 RELATED DOCUMENTS

A. Drawings and general provisions of Contract, including General and Supplementary Conditions and Division 1 Specification sections, apply to work of this section as if repeated herein.

1.02 DESCRIPTION

A. The extent of water cooler work is indicated by drawings and schedules, and by the requirements of this section.

1.03 QUALITY ASSURANCE

A. Provide products produced by one of the following: Elkay Manufacturing Company, General Electric Company, Haws Drinking Faucet Company, Halsey Taylor, or Sunroc Corporation.

B. UL Labels: Provide drinking-water coolers which have been listed and labeled by Underwriters Laboratories, UL 399.

C. ARI Labels: Provide drinking-water coolers which are rated and certified in accordance with Air Conditioning and Refrigeration Institute standard ARI STD 1010 (ANSI A112.11.1).

D. ANSI Standards: Provide only wheelchair water coolers which comply with ANSI A117.1 when indicated.

1.04 SUBMITTALS

A. Submit manufacturer's data on water coolers. Include catalog brochure, capacity, rough-in drawings, templates, instructions and directions for installation of water and drain piping, and anchorages for drinking-water coolers.

PART 2 - PRODUCTS

2.01 MATERIALS

A. General: Except as otherwise indicated, provide manufacturer's standard materials and components as indicated by published product information, designed and constructed as recommended by the manufacturer, and as required for a complete installation.

B. Materials:

1. Stainless Steel: AISI Type 302, with satin finish.

2. Brass: Red (85% copper and 15% zinc).

3. Copper Tubing: ASTM B 68, copper No. 122 (for refrigeration); ASTM B88, type as indicated (for water use).

4. Sheet Steel: Cold, rolled, commercial quality, ASTM 366.

5. Galvanized Sheet Steel: ASTM A527, G60.

6. Chromium Plating: Nickel and chromium electro-deposited on metal, ASTM B 456, Type SC 2.

2.02 EQUIPMENT

A. Electric Drinking-Water Coolers: Provide electric drinking-water coolers, where shown, of type, size, and style indicated; rated at 120 volts, 60 Hz; equipped with air fan-cooled copper tube condenser with fins; and 85-15 red brass cooling tank and copper coil assembly; with compressor, and hermetically sealed refrigeration system utilizing Type 12 refrigerant; with insulated tank and precooler assembly. Provide hand-controlled pushbutton bubbler projector faucet with hooded stream protector and built-in in-line regulator to assure even flow of water under line pressures from 140 to 690 kpa *(20 to 100 psi)*; with cooler temperature control. Provide 1.0mm *(20 gauge)* stainless steel cooler top, and removable front and side panels for servicing and maintenance. Panels shall be stainless steel.

B. Provide units with glass filler outlets.

PART 3 - EXECUTION

3.01 INSTALLATION

A. Install water coolers in accordance with manufacturer's written instructions and in accordance with the National Electrical Code and recognized industry practices. Hangers shall be securely fastened to structure. Coordinate with other work, including water and drain piping, and electrical work necessary to interface installation properly. Electrical wiring by Division 16.

3.02 FIELD QUALITY CONTROL

A. Test operate installed water coolers to demonstrate compliance with the requirements.

END OF SECTION

SECTION 15453

PLUMBING PUMPS

PART 1 - GENERAL

1.01 RELATED DOCUMENTS

A. Drawings and general provisions of Contract, including General and Supplementary Conditions and Division 1 Specification sections, apply to work of this section as if repeated herein.

1.02 DESCRIPTION

A. Extent of plumbing pumps work required by this section is indicated on drawings and schedules, and by requirements of this section.

1.03 QUALITY ASSURANCE

A. Manufacturer's Qualifications: Firms regularly engaged in manufacture of plumbing pumps with characteristics, sizes, and capacities required, whose products have been in satisfactory use in similar service for not less than 5 years.

B. Codes and Standards:

1. HI Compliance: Design, manufacture, and install plumbing pumps in accordance with HI "Hydraulic Institute Standards".

2. UL Compliance: Design, manufacture, and install plumbing pumps in accordance with UL 778 "Motor Operated Water Pumps".

3. UL and NEMA Compliance: Provide electric motors and components which are listed and labeled by Underwriters Laboratories and comply with NEMA standards.

4. SSPMA Compliance: Test and rate sump and sewage pumps in accordance with Sump and Sewage Pump Manufacturers Association (SSPMA) and provide certified rating seal.

1.04 SUBMITTALS

A. Product Data: Submit manufacturer's pump specifications, installation and start-up instructions, and current accurate pump characteristic performance curves with selection points clearly indicated. Submit manufacturer's assembly-type shop drawings indicating dimensions, weight loadings, required clearances, methods of assembly of components and wiring diagrams.

PART 2 - PRODUCTS

2.01 PUMPS

A. General: Provide factory-tested pumps, thoroughly cleaned, and painted with onecoat of machinery enamel prior to shipment. Type, size, and capacity of each pump is listed in pump schedule. Provide pumps of same type by same manufacturer.

2.02 IN-LINE RECIRCULATION CENTRIFUGAL PUMPS

A. Type: Horizontal, oil-lubricated, designed for 865 kpa *(125 psi)* working pressure, 107°C *(225°F)* continuous water temperature, and specifically designed for quiet operation.

B. Body: Bronze or stainless steel.

C. Impeller: Bronze or stainless steel.

D. Shaft: Steel, ground and polished, integral thrust collar.

E. Bearings: Two horizontal sleeve bearings designed to circulate oil.

F. Seal: Mechanical, with carbon seal face rotating against ceramic seat.

G. Motor: Non-overloading at any point on pump curve, open, drip-proof, sleeve bearings, quiet operating, rubber mounted construction, built-in thermal overload protection.

H. Coupling: Self-aligning, flexible coupling.

I. Manufacturer: Subject to compliance with requirements, provide in-line recirculation pumps of one of the following:

Amtrol Inc.
Armstrong Pumps, Inc.
Bell & Gossett ITT; Fluid Handling Div.
Grundfos Pumps Corp.
Taco, Inc.

2.03 CLOSE-COUPLED END SUCTION CENTRIFUGAL PUMPS

A. General: Provide all bronze close-coupled end suction pumps where indicated and of capacities and having characteristics as scheduled.

B. Casing: Bronze, vertical split, for 865kpa *(125 psi)* WP, and hydrostatically tested at not less than 690 kpa *(100 psi),* and shall have 865 kpa *(125 psi)* ANSI flanged suction and discharge connections; screwed connections on 32 mm *(1-1/4")* and smaller; drain plug, air cock, and casing wearing rings.

C. Impeller: Bronze, enclosed type, hydraulically and dynamically balanced, keyed to shaft and secured with locking screw.

D. Shaft: AISI 1035 heat treated steel, with water slinger. maximum shaft deflection at impeller .005.

E. Shaft sleeve: Bronze sealed to shaft and keyed to the shaft.

F. Mechanical seals: All metal parts to be 316 stainless steel, Buna-N bellows, Ni-resist seat and carbon washer.

G. Motor: NEMA, Drip-proof, 1750 RPM, unless otherwise noted; ball bearing shall be grease lubricated, and shall be oversize or double. Motor shall be high efficiency type, wound for across-the line starting.

H. Manufacturers: Subject to compliance with requirements, provide pumps of one of the following:

Amtrol Inc.
Armstrong Pumps, Inc.
Aurora Pump; Unit of General Signal
Bell & Gossett ITT; Fluid Handling Division
Federal Pump Corporation
Paco Pumps
Peerless Pump; Indian Head Company
Taco, Inc.

2.04 FRAME-MOUNTED END SUCTION CENTRIFUGAL PUMPS

A. Provide frame-mounted end suction pumps where indicated, and of capacities and have characteristics as scheduled.

B. Type: Horizontal mount, single stage, vertical split case, flexible coupling, base mounted, designed for 1210 kpa *(175 psi)* working pressure.

C. Casing: Bronze, bronze fitted, 865 kpa *(125 psi)* ANSI flanges, tappings for gage and drain connections.

D. Wearing rings: Bronze, rings to include casing wearing ring and impeller wearing ring.

E. Shaft: Steel, AISI-1045, with replaceable stainless steel shaft sleeve.

F. Mechanical Seals: All metal parts to be 316 stainless steel, Buna-N bellows, Ni-resist seat and carbon washer.

G. Bearings: Heavy duty regreasable ball bearings with not less than 2-year minimum bearing life under extreme conditions and average life of 10 year.

H. Motor: NEMA, open, drip-proof, regreasable ball bearings, high efficiency type.

I. Impeller: Cast bronze, single suction enclosed type, hydraulically and dynamically balanced, and keyed to shaft. The ratio for the maximum impeller diameter to the actual impeller diameter shall be no less than 11:10.

J. Base plate: Structural steel with welded cross members and open grouting area. Base plate shall be completely grouted to concrete base.

K. Coupling: Flexible, capable of absorbing torsional vibration, equipped with coupling guard.

L. Manufacturer: Subject to compliance with requirements provide frame-mounted end suction pumps of one of the following.

Amtrol Inc.
Armstrong Pumps, Inc.
Aurora Pump: Unit of General Signal
Bell & Gossett ITT; Fluid Handling Division
Federal Pump Corporation
Paco Pumps
Peerless Pump; Indian Head Company
Taco, Inc.

PART 3 - EXECUTION

3.01 INSTALLATION OF PUMPS

A. General: Install plumbing pumps where indicated, in accordance with manufacturer's published installation instructions, complying with recognized industry practices to ensure that plumbing pumps comply with requirements and serve intended purposes. Electrical wiring by Division 16.

B. Access: Provide access space around plumbing pumps for service as indicated, but in no case less than that recommended by manufacturer.

3.02 ADJUSTING AND CLEANING:

A. Alignment: Check alignment, and where necessary, realign shafts of motors and pumps within recommended tolerances by manufacturer, and in presence of manufacturer's service representative.

B. Start-Up: Lubricate pumps before start-up. Start-up in accordance with manufacturer's instructions.

C. Cleaning: Clean factory-finished surfaces. Repair any marred or scratched surfaces with manufacturer's touch-up paint.

END OF SECTION

SECTION 15458

DOMESTIC WATER HEATER

PART 1 - GENERAL

1.01 RELATED DOCUMENTS

A. Drawings and general provisions of Contract, including General and Supplementary Conditions and Division 1 Specification sections, apply to work of this section as if repeated herein.

1.02 DESCRIPTION

A. Furnish and install NICKELSHIELD water heater as manufactured by PVI Industries, Inc., Fort Worth, Texas.

B. The water heaters shall have storage capacity and recovery as indicated in heater schedule when supplied with the indicated boiler water temperature and flow.

1.03 SUBMITTALS

A. Submit manufacturer's catalog data, specifications, installation and start-up instructions, capacity and ratings, maintenance data and warranties.

B. Submit drawings indicating dimensions, weights, required clearances, and methods of assembly of all components. Submit construction features for Seismic Zone 4. Refer to Section 15200, "SEISMIC PROTECTION FOR MECHANICAL AND ELECTRICAL SYSTEMS".

C. Submit wiring diagrams for all components, indicating all required field electrical connections.

PART 2 - PRODUCTS

2.01 DOMESTIC WATER HEATER

A. Tank: The supertank shall be constructed in accordance with ASME Code Section IV, stamped with the appropriate symbol, and hydrostatically tested at 1310 kpa *(190 psi)* minimum. The tank shall be equipped with a removable modular energy package mounted on a flange with a minimum diameter of 585 mm *(23")*. Tank access may be gained by the removal of this energy package with ordinary hand tools. The supertank shall also be equipped with an easily removable rear module access cover with a minimum diameter of 585 mm *(23")* for simplicity of tank access and energy package cleaning maintenance. The supertank may be of modular design where more than one tank module will be

required to meet the total gallon capacity. The tank shall contain a strata-baffle to divert the incoming cold water to allow 80% of the total supertank storage to be effective at a usable temperature of plus or minus -15 deg. C *(±5°F)* from the set point of the operating thermostats. All fittings shall be of type K heavy copper. No tank connections of other than nonferrous alloys will be accepted.

B. Controls: There shall be a minimum of two operating thermostats. These operating controls should be set at 43.3 deg. C *(110°F)* for the lower and 48.8 deg. C *(120°F)* for the upper with a maximum circulating water temperature in the plumbing system not to exceed 48.8 deg. C *(120°F)*. There shall be one temperature limiting device designed to prevent temperatures from exceeding a maximum of 93.3 deg. C *(200 F)*. There shall also be an ASME temperature and pressure relief valve set at not more than 865 kpa *(125 psi)* and 98.8 deg. C *(210°F)*. There shall also be installed, in the cold section of the tank as factory standard equipment, a thermal expansion control valve set to relieve pressures not to exceed 690 kpa *(100 psi)*.

C. The heater shall have an intra-tank circulator and a system pump, sized and furnished by the tank manufacturer.

D. Insulation: The tank shall be insulated with a heavy density fiberglass insulation and shall be jacketed with segmented panels of 0.85 mm *(22 gauge)* steel with a factory baked enamel finish. Each panel shall be interlocked and shall be easily removable for field replacement should damage occur. The heat loss of the insulated tank shall not exceed 159 J/m^2 *(14 BTU/HR per square foot)* of tank surface area with not less than an ambient temperature of 18.3 deg. C *(65°F)*. The minimum jacket heat loss acceptable must not exceed those of ASHRAE 90 Standards. The entire water heater shall rest on heavy duty skids for ease of movement.

E. Lining: The tank shall be completely lined, inside and out, with 97% pure nickel. The method of applying the nickel shall be the electrolyses chemical deposition method, creating a holiday-free, nonferrous layer of 97% pure nickel over the ASME code steel. The tank shall have an additional overcoat of an elastomeric, polymerized, hydrophobic cross-linked plastic to prevent any electrolysis that may develop within the plumbing system.

F. Tank Warranty: The tank shall be covered under the manufacturer's ten year warranty, service policy and long life service policy. In the first year, the manufacturer shall pay for all material, labor and freight covering any part of parts of the water heater that should fail or not meet Sandia's satisfaction. For the next four years, the manufacturer shall pay for all material, labor and freight to repair or replace the tank should it leak or produce discolored water. During the last five years if the tank produces rusty water or leaks, the manufacturer shall repair the tank so that it does not leak or produce rusty water and all repair costs will be

totaled and shared between the manufacturer and Sandia. If in the judgment of the manufacturer the tank is not repairable, the manufacturer will offer to sell to Sandia a new tank of the then current equivalent model. With either repair or replacement, the cost to Sandia will be equal to the number of months in service, divided by the total number of months of the warranty, time the cost of repair or the current list price of the replacement tank. The tank package warranty must be supplied with submittals.

G. Energy Package: The energy package shall produce a minimum of the scheduled gallons per hour, at an 80°F temperature rise, when supplied with scheduled boiler water at a minimum of scheduled gpm flow. The flexcoil heat exchanger shall not create a pressure drop thru the primary loop of the boiler water system. The flexcoil shall be comprised of multiple modules of helically wound 20 mm *(3/4")* copper tubing. The heat exchange surface shall produce a minimum of 8171 kw/m^{2}k (400 btu/^{o}F/square foot). Start up shall be performed by a factory authorized craftsman. Start up performance data shall be supplied to Sandia.

H. Energy Package Warranty: The energy package shall have a three year warranty against material and workmanship, corrosion and erosion, thermal shock, and fouling. All material, labor, and freight must be completely paid for by the manufacturer should failure occur. The energy package warranty must be supplied with submittals.

I. Certification and Codes: The entire water heater shall meet UL requirements, shall fit properly in the space provided and shall conform to drawing specifications.

J. The water heaters shall include all standard equipment as shown on manufacturer's specification sheet, water temperature gauge, and water pressure gauge. Control of temperature shall include upper and lower operating thermostats and control valve.

PART 3 - EXECUTION

3.01 INSTALLATION

A. Installation shall be in accordance with manufacturer's instructions. Units shall fit into the space provided and shall conform to the drawing requirements. The complete installation shall be in accordance with all applicable state and local codes and installation drawings. Tie down per Section 15200.

END OF SECTION

SECTION 15459

ELECTRIC WATER HEATERS
(LESS THAN 322 LITERS*(85 GALLONS)*)

PART 1 - GENERAL

1.01 RELATED DOCUMENTS

A. Drawings and general provisions of Contract, including General and Supplementary Conditions and Division 1 Specification sections, apply to work of this section as if repeated herein.

1.02 DESCRIPTION

A. The extent of the electric water heater work is indicated on the drawings, schedules and specifications.

B. Provide units that comply with UL 174, Standards for Safety.

C. Manufacturers: State Industries Inc., National Division, A.O. Smith, or equal.

D. Capacity: Storage, recovery, and electrical characteristics as indicated.

1.03 SUBMITTALS

A. Submit manufacturer's catalog data, installation and start-up instructions, and capacity and ratings, with selection points clearly indicated.

PART 2 - PRODUCTS

2.01 ELECTRIC WATER HEATER

A. Tank: Steel with glass lining, 1035kpa *(150 psi)* working pressure.

B. Elements: Immersion type, low watt density.

C. Thermostats: Provide thermostats, contactors, and high and low limit cutoff.

D. Jacket: Enameled steel with fiberglass or foam insulation.

E. Units shall have anode rod protection, brass drain valve and ASME combination temperature and pressure relief valve.

PART 3 - EXECUTION

3.01 INSTALLATION

A. Install in accordance with manufacturer's instructions, local authority having jurisdiction and accepted practice of the industry.

B. Pipe temperature and pressure valve to nearest floor drain (provide air gap).

C. Start up water heaters in accordance with manufacturer's instructions and demonstrate compliance with requirements.

D. Electrical wiring by Division 16.

END OF SECTION

SECTION 15460

ELECTRIC BOOSTER WATER HEATERS

PART 1 - GENERAL

1.01 RELATED DOCUMENTS

A. Drawings and general provisions of Contract, including General and Supplementary Conditions and Division 1 Specification sections, apply to work of this section as if repeated herein.

1.02 DESCRIPTION

A. The extent of the electric booster water heater work is indicated on the drawings,schedules and specifications.

B. Provide units that comply with UL 174, Standards for Safety.

C. Capacity: Storage, recovery, and electrical characteristics as indicated.

1.03 SUBMITTALS

A. Submit manufacturer's catalog data, installation and start-up instructions, and capacity and ratings, with selection points clearly indicated.

PART 2 - PRODUCTS

2.01 ELECTRIC WATER HEATER

A. Furnish and install electric booster water heaters as manufactured by Hatco Corp., or equal.

B. Provide Basic heater, with Castone tank with 1- year warranty, ASME temperature/pressure relief valve, pressure reducing valve, two temperature/pressure gauges and a low-water cut-off to prevent element burnout due to low water condition.

C. Booster heaters shall be factory pre-plumbed and pre-wired with calibrated immersion thermostats and high temperature limit switch. Service area is accessible from the front to permit easy installation.

D. Provide a stainless steel front panel and silver gray hammertone body models.

E. Accessories:

1. All Stainless Steel Body and Base.
2. Adjustable Stainless Steel Legs [150 to 200 mm *(6" to 8")*].
3. Shock Absorber - to reduce water hammer.
4. Pilot Light and On-Off Switch.

F. Model Number, Wattage, Voltage, Phase as scheduled.

PART 3 - EXECUTION

3.01 INSTALLATION

A. Install in accordance with manufacturer's instructions, local authority having jurisdiction and accepted practice of the industry.

B. Start up water heaters in accordance with manufacturer's instructions and demonstrate compliance with requirements.

END OF SECTION

SECTION 15481

COMPRESSED AIR PIPING AND EQUIPMENT

PART 1 - GENERAL

1.01 RELATED DOCUMENTS

A. Drawings and general provisions of Contract, including General and Supplementary Conditions and Division 1 Specification sections, apply to work of this section as if repeated herein.

1.02 DESCRIPTION

A. The extent of compressed air piping work and auxiliary equipment is indicated by drawings and schedules and by requirements of this section, and is hereby defined to include (but not necessarily limited to) air compressors, compressor drives, aftercoolers, compressed air receivers, intake air filters, outlet air filters, regulators, moisture separators, piping, discharge mufflers, flexible connectors, controls, air dryer and accessories.

B. ANSI Code Compliance: Comply with applicable provisions of ANSI/ASME B31.1, "Power Piping."

C. ASME Code Symbol Stamps: Provide compressed air receivers and safety (pressure relief) valves complying with applicable ASME codes, and stamped with appropriate code symbols.

D. CAGI Standards: Compressors and auxiliary equipment shall comply with Compressed Air and Gas Institute standards.

E. UL Labels: Provide electrical components which have been listed and labeled by Underwriters Laboratories.

F. Equipment in this Section shall have protection as outlined in the "Seismic Restraint Manual Guidelines for Mechanical Systems", SMACNA, 1991.

1.03 SUBMITTALS

A. Submit manufacturer's data on compressed air piping and equipment.

B. Submit shop drawings for required compressed air piping and equipment showing pipe sizes, plan and elevations of compressor, integral component parts, auxiliary equipment including fittings, and piping connections.

C. Wiring Diagrams: Submit manufacturer's electrical requirements for power supply wiring to compressed air equipment. Submit manufacturer's ladder-type wiring diagrams for interlock and control wiring. Clearly differentiate between portions of wiring that are factory-installed and portions to be field-installed.

D. Maintenance Data: Submit maintenance data and parts lists for compressed air systems materials and products. Include this data, product data, shop drawings, record drawings, and wiring diagrams in maintenance manual; in accordance with requirements of Section 15010 "BASIC MECHANICAL REQUIREMENTS".

E. Submit set of radiographs of welds for receiver per ASME Section VIII, Division 1, Part UW-51.

PART 2 - PRODUCTS

2.01 COMPRESSED AIR PIPING SYSTEM

A. General: Furnish and install complete Compressed Air Piping System as shown on the drawings, details, schedules and as specified.

B. Piping: Carbon steel, ASTM A-120, Sch 40, with 1035 kpa *(150 lb)* malleable screwed fittings; or Type K copper, ASTM B-88 with wrought copper sweat with 95/5 tin-antimony solder joints.

C. Ball Valves: Bronze body, ASTM B-16 brass packing gland, Alloy C hard brass ball, Buna-N seals, with lever handle.

D. Air Pressure Reducing Valve: Bronze body, sized for capacity of system.

E. Pressure Gauges: 115 mm *(4-1/2")* dial with safety blowout and brass gauge cock.

F. Drain Trap: Automatic mechanical drain trap Hiross Model Sac-120 B400, or equal.

2.02 ROTARY SCREW AIR COMPRESSORS

A. General: Provide fully enclosed, single stage, rotary screw packaged air compressors complete with all standard equipment and instrumentation, as indicated.

B. Compressor: The Compressor shall be oil cooled *(air cooled)*, positive displacement rotary screw type, delivering scheduled CFM of free air. The compressor shall be capable of continuous full flow operation 24 hours/day at rated capacities and pressures. All components are to be mounted on a rigid steel

base with forklift access holes for easy mobility. The utility connections to the compressor, i.e., *cooling water*, power and air discharge, shall be mounted in the rear of the compressor for ease of installation.

C. Air end: The compressor air end shall be designed for peak efficiency range at rated design. Rotors shall be forged steel AISI-C-1141 and be of asymmetrical profile. Rotors shall have sealing strips ground on the rotor surface to increase rotor sealing capability. Rotor shafts shall be precision ground to tolerance to within 0.0127 mm*(0.0005 inch)*. Each rotor shall be match-marked prior to assembly with the air end. All cast parts shall be 100% inspected, to insure components are within design tolerances.

D. Bearings: Radial loads shall be carried by high quality vacuum degassed cylindrical roller bearings to support the rotors on the inlet end of the air end. Thrust bearings design. A pair of offset tapered roller bearings shall be mounted on the discharge end of the male and female rotors. Coolant dams shall be utilized to ensure startup lubrication.

E. Motor: The motor shall be energy efficient type, specifically designed for the torque, speed, and horsepower characteristics of the compressor. The motor shall be operated by a 460 volt, 3 phase, 60 HZ power source. The motor shall be applied such that full load brake horsepower requirements will permit operations in the motor's peak efficiency range.

1. The motor bearing's shall be type M vacuum degassed for uniform hardness on bearings surface. Single row roller and ball bearings shall carry radial and thrust loads and shall be designed with a B10 bearing life, at least double those standards required by National Manufacturers Association.

2. Insulation for the motor shall be Class F: Class B is not acceptable. The motor shall be applied such that the motor windings only experience a temperature rise of 95°C *(203 deg. F)*, above ambient at full load BHP. The construction of the motor frame and bracket shall be cast iron or aluminum with uniform thickness. Motor feet shall be cast as an integral part of the frame. The material shall provide for maximum strength and rigidity for bearing support. Aluminum windings and steel frames are unacceptable.

3. Motor leads shall be protected by high temperature glass braided insulation, and are to be extended out of the motor to the starter connection terminals, without the use of an intermediate terminal box. Motors shall be flange faced to accommodate permanent alignment with an integral drive system. The motor shall not require the use of a flexible coupling.

F Starter: The compressor package shall include an AAL full voltage starter mounted in its own enclosure. The starter shall be mounted, wired and tested as

part of the complete compressor package prior to shipment. Main starter shall include fan motor starter electrically interlocked and wired for proper sequencing.

G. Controls: The compressor shall include a comprehensive control module which provides for automatic starting and stopping, capacity control, operating control, and safety control of the unit. The compressor shall blowdown to 175 kpa *(25 psig)* when unloaded to minimize power requirements. If compressor is not required, (ie. No load), unit shall shut down.

1. All control functions shall be centralized on a printed circuit board will shutdown functions for high discharge air temperature, main drive motor and starter overload protection, fan motor overload protection and high bearing coolant temperature.

H. Drive Assemble: The motor and compressor air ends are joined by an integral gear drive system. Precision dowels shall be used to insure permanent motor air end alignment. The gear casing shall be totally enclosed and have positive pressure coolant feed to 1 gear mesh for optimum lubrication. The speed optimizing gears shall of AGMA Class 11 quality.

I. Enclosure: Low sound enclosure shall cover unit with Quick release latched panels. The dBa sound level will be 76 at one meter *(3 feet).*

J. Coolant/Lubrication System: Lubrication throughout the compressor shall be maintained by differential pressure. The lubrication system shall include check valves, relief valves, and other safety components as necessary to ensure trouble free operation. the entire cooling system shall be filtered by a 10-micron full flow coolant filter. The coolant filter shall be complete with a pressure relief bypass and service filter indicator. A thermal control valve is required to maintain the proper operating temperature of the compressor.

j. Cooling Lubrication System: Fluid shall remove heat of compression from compressor unit and shall be circulated by air pressure differential (no pump required) through air-cooled heat exchanger and filter. Equipment shall include fan, mounted on double extended shaft motor (no separate fan motor). Full-flow fluid filter, fluid thermal bypass valve, minimum pressure valve, blowdown valve, discharge check valve, and coolant stop valve. Air-cooled aftercooler and air in the shell. Maximum operating temperatures of air cooled coolers shall be 40 deg. C (104 deg. F).

K. Internal Piping: The compressor shall utilize rigid steel piping, Bundyweld tubine flexible connectors and nylon tubing as necessary to provide vibration-free operation. Each compressor system, after manufacturing and assembly, will be 100% inspected and tested to provide a piping system which minimizes potential leaks and maintenance.

L. Manufacturer: Ingersoll-Rand Model SSR 4P or equal.

2.03 REFRIGERATED TYPE AIR DRYER

A. Air dryer shall be a refrigerated type, capable of drying compressed air to 150 degree F. Maximum operating pressure 250 psig.

B. Unit shall have two ASME code constructed vessels as the desiccant towers mounted on a rigid skid frame. A shuttle valve shall divert the incoming air through one bed for drying while the second bed is regenerating. Provide pressure relief valves and pressure gages for desiccant towers. Provide mufflers or purge air lines to meet OSHA standards.

C. Controls, unit mounted in NEMA 12 enclosure, shall automatically start the refrigeration cycle. The dew point shall be adjustable. Control voltage shall be 120 volts, single phase.

D. Manufacturer: Leroi.- Model LR400, equivalent Sullair Model, or equal.

2.04 DESICCANT TYPE AIR DRYER

A. Air dryer shall be a heatless, two-bed desiccant type, capable of drying compressed air to minus 65 deg. C *(150 degree F)*. Maximum operating pressure 1725 kpa *(250 psig)*.

B. Unit shall have two ASME code constructed vessels as the desiccant towers mounted on a rigid skid frame. A shuttle valve shall divert the incoming air through one bed for drying while the second bed is regenerating. Provide pressure relief valves and pressure gages for desiccant towers. Provide mufflers or purge air lines to meet OSHA standards.

C. Controls, unit mounted in NEMA 12 enclosure, shall automatically cycle the air flow through the two desiccant beds so that while one bed is absorbing moisture from the inlet air the other bed is being regenerated by a portion of the dried air. The dew point shall be adjustable by regulation of the purge rate. Control voltage shall be 120 volts, single phase.

D. *Manufacture: Deltech Manufacturing Inc., Model PS370 or equal.*

2.04 COMPRESSED AIR FILTER

A. Pre-Filter:

1. Filter shall remove particles of water and oil as small as .01 micron. Filter shall utilize impingement and centrifugal separation to remove up to 90% of particles oil droplets and slugs of water before the air reaches the filter

element. Multi-media layer element shall remove progressively smaller particles, mists and droplets. Maximum operating pressure shall be 1725 kpa *(250 psig)*.

2. Gauge sensing pressure drop across the filter shall indicate element change.

3. *Manufacturer: Deltech Engineering Inc., Model FXC 070 or equal.*

B. Afterfilter:

1. The particulate afterfilter shall remove particles as small as 3 microns. Maximum operating pressure shall be 1725 kpa *(250 psig)*.

2. Gage sensing pressure drop shall indicate element change.

3. Manufacturer: Deltech Engineering, Inc. Model 511 or equal.

2.05 AIR RECEIVER

A. The receiver shall be ASME code constructed and stamped. Accessories shall include pressure gauge, drain valve, automatic service (air line) valve and safety valve. The receiver shall have capacity as indicated for 1725 kpa *(250 psig)* working pressure. Provide 278 x 381mm *(11x15)* manhole. Provide receiver with zinc phosphite primed finish.

B. Radiographic Testing: Perform full radiography of welds per ASME Section VIII, Division 1, Part UW-51. Submit full set of radiographs to Sandia.

C. Capacity: Nominal 660 gallon, approximately 88 cu ft.

D. Dimensions: approximately 42"x117".

2.06 FILTER-REGULATORS WITH GAGE

A. Provide filter regulation with gage at the laboratory air termination points.

B. Units shall be suitable for 250 psig at 125F primary and 0-100 PSI secondary.

C. Units shall have metal bowl, two gage ports, filter element and one gage.

D. Manufacturer: Binks No. 86-948, no substitutions.

2.07 AIR HOSE REELS

A. Provide heavy duty air hose reels with double supporting arm on roller guide that can be rotated for direct pickup in overhead, side wall or floor installation heel shall have 15 m *(50 ft)* air hose, air chuck and quick coupler.

B. Manufacturer: Binks No. 72-5004, or equal.

PART 3 - EXECUTION

3.01 INSPECTION

A. Installer must examine areas and conditions under which compressed air piping and equipment is to be installed.

3.02 INSTALLATION

A. General: Comply with requirements of Section 15050 for installation of basic piping materials. Install compressed air piping products and equipment in accordance with manufacturer's written instructions, applicable requirements of ANSI B31.1, and in accordance with recognized industry practices.

B. The manufacturer shall provide the services of a qualified representative to review the installation of the compressors and allied components, test and start the compressors, and instruct Sandia's operating personnel in the operation and maintenance of the systems.

3.03 EQUIPMENT CONNECTIONS

A. Connect compressed air piping to mechanical equipment in manner shown. Valve and cap outlets for future connection to equipment where indicated.

B. Piping Isolation: Install flexible pipe connectors to isolate vibration.

3.04 PIPE TEST

A. Compressed Air Piping Leak Test: Prior to initial operation of piping system, air purge lines with oil-free dry air, and perform a 24-hour standing pressure time-test. Charge line with compressed air to 1035 kpa *(150 psi)*; maintain test pressure for 24 hours with a pressure loss no greater than 35 kpa *(5 psi).* During pressure test, test joints and fittings for leaks with soap bubble solution; while bubble testing, hammer joints with rubber or rawhide mallet.

END OF SECTION

SECTION 15483

FUEL OIL SYSTEMS

PART 1 GENERAL

1.01 RELATED DOCUMENTS

A. Drawings and general provisions of Contract, including General and Supplementary Conditions and Division 1 Specification sections, apply to work of this section as if repeated herein.

1.02 DESCRIPTION

A. The extent of the fuel oil piping work and auxiliary equipment is indicated by drawings, schedules, and by the requirements of this Section, and is hereby defined to include (but not necessarily be limited to) fuel oil piping, storage tank, fittings, specialties and transfer equipment.

1.03 SUBMITTALS

A. Submit product data for special duty valves, oil transfer pumps, include performance curves, electrical characteristics, and specified accessories, and oil piping specialties.

B. Show drawings detailing fabrication and installation of oil accessories. Detail equipment assemblies and indicating dimensions, weights, loadings, required clearances, method of field assembly, components, and location and size of each field connection.

C. Wiring diagrams detailing wiring for power and control systems; differentiating between manufacturer-installed wiring and field-installed wiring.

D. Maintenance data for oil transfer equipment, for inclusion in Operating and Maintenance Manual specified in Division 1 and Division 15, Section 15010 "BASIC MECHANICAL REQUIREMENTS".

1.04 QUALITY ASSURANCE

A. Quality welding processes and welding operators in accordance with ASME "Boiler and Pressure Vessel Code", Section IX, "Welding and Brazing Qualifications".

B. Regulatory Requirements: Comply with provisions of the following codes:

1. NFPA 31 - Standard for the Installation of Oil Burning Equipment, for oil piping materials and components, oil piping installations, and inspection, and testing of fuel oil piping systems.

C. UL Compliance: Provide fuel oil piping components which are listed and labeled by UL.

1. UL 343 - "Standard for Pumps for Oil-Burning Appliances", for oil transfer pumps.

2. UL 443 - "Steel Auxiliary Tanks for Oil-Burner Fuel", for steel auxiliary oil tanks.

3. UL 567 - "Pipe Connections for Flammable and Combustible Liquids and LP-Gas," for pipe connectors for fuel oil piping systems.

PART 2 - PRODUCTS

2.01 MANUFACTURERS

A. Manufacturers: Subject to compliance with requirements, provide products by one of the following:

1. Special Duty Valves: Webster Electric Co., Sub. of Sta-Rite Industries, Inc.

2. Vertical Ball Check Valve: Lunkenheimer.

3. Strainers:

a. Armstrong Machine Works.
b. Hoffman Specialty ITT; Fluid Handling Div.
c. Metraflex Co.
d. R-P&C Valve; Div. White Consolidated Industries, Inc.
e. Spirax Sarco.
f. Trane Co.
g. Watts Regulator Co.

4. Oil Transfer Pumps:

a. ITT Marlow.
b. Roper Pump Co.
c. Viking Pump Div.' Houdaille Industries, Inc.
d. Webster Electric Co; Sub. of Sta-Rite Industries, Inc.

5. Oil Piping Specialties:

a. McDonald Mfg. Co., A.Y.
b. OPW Division; Dover Corp.

2.02 PIPE MATERIALS AND FITTINGS

A. Pipe: Carbon Steel, Schedule 40, ASTM A120.

B. Malleable Iron Fittings: ANSI B16.3, threaded, Class 150.

2.03 PIPING SPECIALTIES

A. Dielectric Unions: Provide dielectric unions with appropriate end connections for the pipe materials in which installed (screwed, soldered, or flanged), which effectively isolate dissimilar metals, prevent galvanic action, and stop corrosion.

B. Y-Pattern Strainers: 865 kpa *(125 psig)* working pressure; cast-iron body conforming to ASTM A 126, Class B; flanged ends for 65 mm *(2-1/2 inch)* and larger, threaded connections for 50 mm *(2 inch)* and smaller, blotted cover, perforated stainless steel screen, and plugged blow-down drain.

C. Flexible Connectors: Minimum 1035 kpa *(150 psig)* working pressure, maximum 121 deg. C *(250 deg F)* operating temperature; stainless steel bellows with woven flexible bronze wire reinforcing protective jacket. Connectors shall have flanged or threaded and connections to match equipment connected; and shall be capable of 20 mm *(3/4 inch)* misalignment.

2.04 GENERAL DUTY VALVES

A. General duty valves (ie., gate, globe, and ball valves) are specified in Division 15, Section 15100 "VALVES".

2.05 SPECIAL DUTY VALVES

A. Oil Safety Valves: 1725 kpa *(250 psig)* maximum working pressure, 287 deg. C *(550 deg. F.)* maximum operation temperature; ASTM B 61 bronze body and bronze bases and discs, and field adjustable cadmium-plated carbon steel springs factory-set at 20 percent above operating pressure. End connections shall be inside threaded with threads conforming to ANSI B1.20.1. Valve shall be UL-listed for flammable or volatile liquids.

B. Vertical Ball Check Valves: Class 200, 2760 kpa*(400 psig)* maximum operating pressure, 2-piece bronze construction with threaded end connections; integral bronze seats and replaceable stainless steel ball.

2.06 FUEL OIL STORAGE TANK (DOUBLE WALL)

A. The fuel oil storage tank shall be a double containment, above ground storage tank as manufactured by ConVault, Inc., 4109 Zeering Road, Denair, CA 95316, or equal.

B. Storage tank shall incorporate the following requirements:

1. Primary containment shall be a UL listed steel tank, protected by 150 mm *(6 inches)* of concrete with a 2 hour fire wall rating.

2. Secondary containment shall be a rectangular steel tank with space between tank wall and primary containment tank for monitoring of leaks. Tank shall have 150 mm *(6 inch)* high built-in supports to raise the tank for visually checking for leaks under the tank.

3. Tank shall have 100 mm*(4")* fill nozzle, 150 mm*(6")* vent nozzle, 50mm*(2")* outlet tapping, 50 mm*(2")* drain valve, and a leak detector tube.

4. The tank foundation shall be provided by the tank manufacturer. Tank foundation shall be a concrete pad with cement filled steel posts. The tank manufacturer shall provide shop drawing of the foundation for approval.

5. Installation shall be suitable for Seismic Zone 4.

6. Capacity and dimensions as indicated on drawings.

2.07 LEVEL INDICATING SYSTEM

A. Leak detection system shall include a liquid level indicator and an electronic liquid level transmitter.

B. Liquid level indicator shall be Kersey Model 5003 with features as follows:

1. Power: 115 VAC 1/4 amp.

2. Temperature Range: -1.1 to 71.1 deg. C *(30° F to 160° F)*.

3. Accuracy: $\pm$ 1-1/2% Full Scale

4. Weight Shipping: 6.8kg *(15 lbs)*

5. Dial: 121 deg. 267 mm *(250° 10-1/2")* Scale custom calibrated 150 increments maximum.

6. Housing: JIC NEMA 4

7. Mounting: Surface Mounting tabs.

8. Input: Variable Resistance Proportional voltage.

9. Output: Proportional 4-20 ma.

10. Alarm Contacts - 5 amps. Model 5003 - 2 High, 2 Low

C. Electronic Liquid Level Transmitter shall be Kersey Model VR-5 to detect leaks of inner tank. Features as follows:

1. Cover and Flanged Housing: Aluminum

2. Fulcrum Pipe and Pushrod: Carbon Steel

3. Pivot Assembly: Brass

4. Float arm: Aluminum

5. Float: Polyfoam

6. Output: 300 mV/V

7. Input: Full Scale

2.08 LEAK DETECTION SYSTEM

A. Leak detection system shall consist of the following components:

1. Sensing Probe: Single channel compact probe suitable for liquid sensing. Unit sensor electronics shall be housed in a cast iron explosion-proof enclosure that is UL listed for Class I, Division I, Groups C and D. Unit shall be Universal Sensors and Devices, Inc., Model LALS-1 liquid sensing probe with 7.6 m *(25 foot)* cable.

2. Leak Alert Panel: Single channel system for use with liquid sensing probe, LED alarm indicator, audio alarm, one set SPDT relay contacts, pushbutton alarm circuit test switches, and buzzer silencer switch. Enclosure: NEMA Type 4 weatherproof enclosure, Model No. LA-01 Universal Sensors and Devices, Inc.

2.09 FUEL OIL PUMPS

A. Refer to Section 15555, "HOT WATER BOILER (Firetube)" for fuel oil pumps.

PART 3 - EXECUTION

3.01 PIPE INSTALLATIONS

A. Install supply, return, and vent piping at a uniform grade of 6.4 mm in 3 m *(1/4 inch in ten feet)* downward in the direction of drains.

B. Make changes in directions and branch connections using fittings.

C. Make reductions in pipe sizes using eccentric reducer fitting install with the level side down.

D. Install dielectric unions where piping of dissimilar metals are joined.

E. Install flexible connectors at inlet and discharge connections to pumps and othervibration producing equipment.

F. Install strainers on the supply side of each control valve, pressure regulating valve, oil burner connection, and elsewhere as indicated. Install 20 mm *(3/4 inch)* NPS nipple and ball valve in blow down connection of strainers 50 mm *(2 inch)* and larger. Use same size nipple and valve as blow-off connection of strainer.

3.02 VALVE INSTALLATIONS

A. Install valves in accessible locations, protected from physical damage. Tag valves with a metal tag attached with a metal chain indicating the piping systems supplied.

B. Install shut-off duty valves at each branch connection to supply mains, and elsewhere as indicated.

C. Install drain valves at low points in mains, risers, branch lines, and elsewhere as required for system drainage.

D. Install swing check valves as required to control flow direction.

3.03 FIELD QUALITY CONTROL

A. Test oil piping in accordance with NFPA 31.

B. Remake leaking joints and connections using new materials.

C. Test and adjust controls and safeties. Replace damaged or malfunctioning controls and equipment.

D. Train Owner's maintenance personnel on procedures and schedules related to start-up and shut-down, troubleshooting, servicing, and preventative maintenance.

E. Review data in Operating and Maintenance Manuals. Refer to Division 1, Section "PROJECT CLOSEOUT".

END OF SECTION

SECTION 15488

NATURAL GAS PIPING SYSTEM

PART 1 - GENERAL

1.01 RELATED DOCUMENTS

A. Drawings and general provisions of Contract, including General and Supplementary Conditions and Division 1 Specification sections, apply to work of this section as if repeated herein.

1.02 DESCRIPTION

A. This section specifies gas piping systems for supplying natural gas to all gas-fired equipment/appliances to a point 1.2m (5 feet) outside the building.

B. ANSI Code Compliance: Comply with applicable provisions of ANSI B31.2 "Fuel Gas Piping".

C. National Fuel Gas Code Compliance: Comply with applicable provisions of NFPA 54 (ANSI Z223.1) "National Fuel Gas Code", and ANSI Z223.1a "Supplement to National Fuel Gas Code".

1.03 SUBMITTALS

A. Submit manufacturer's data for fuel gas piping systems materials and products.

PART 2 - PRODUCTS

2.01 MATERIALS

A. Pipe: Black steel, Schedule 40, ASTM A 120.

B. Fittings: 50 mm *(2")* and smaller, black malleable iron, threaded, class 150 per ANSI B 16.3.

C. Fittings: 65 mm *(2-1/2")* and larger, standard steel butt weld per ASTM A 234 and ANSI B 16.9.

D. Weld-O-Lets and Thread-O-Lets may be used in place of tees in pipe 65 mm *(2-1/2")* and larger when reducing two or more sizes.

E. Gas Stops: Crane No. 270.

F. Lubricated Plug Valves: Homestead No. 611 and 612.

G. Pressure Regulators: Fisher, A.W. Cash, or equal. Type, size and capacity as noted on drawings.

H. Meters: Provide Roots Model 16M-125, 166 l/s *(21,100 CFH)*, with pressure and temperature compensation and pulse output, or equal.

PART 3 - EXECUTION

3.01 INSTALLATION

A. General: Comply with the requirements of Section 15050 for installation of basic piping materials. Install piping products in accordance with the manufacturer's written instructions, the applicable requirements of ANSI Z223.1, and in accordance with recognized industry practices to ensure that products serve the intended function.

1. Use sealants on metal gas piping threads which are chemically resistant to natural gas. Use sealants sparingly and apply to only male threads of metal joints.

2. Remove cutting and threading burrs before assembling piping.

3. Do not install defective piping or fittings. Do not use pipe with threads which are chipped, stripped or damaged.

4. Plug each gas outlet, including valves, with a threaded plug or cap immediately after installation and retain until continuing piping or equipment connections are completed.

5. Install drip-legs in gas piping where indicated and at each drop to gas burning equipment.

6. Install "Tee" fitting with bottom outlet plugged, or capped, at bottom of pipe risers.

7. Use insulating unions when dissimilar metals are joined.

8. Connect gas piping to equipment in the manner shown, and comply with equipment manufacturer's instructions where not otherwise indicated.

3.02 TESTING

A. Gas Piping Tightness Test: Prior to initial operation, test and purge fuel gas piping in accordance with ANSI Z223.1, "National Fuel Gas Code", at not less

than 345 kpa *(50 psig)* for 2 hours using air or nitrogen. Use soap and water to test for leaks.

B. Repair or replace fuel gas piping as required to eliminate leaks, and retest as specified to demonstrate compliance.

END OF SECTION

SECTION 15492

LIQUID EFFLUENT SYSTEM

PART 1 - GENERAL

1.01 RELATED DOCUMENTS

A. Drawings and general provisions of Contract, including General and Supplementary Conditions and Division 1 Specification sections, apply to work of this section as if repeated herein.

B. Coordinate work of this section with Section 02735, "LIQUID EFFLUENT SYSTEMS".

1.02 DESCRIPTION

A. Furnish and install a complete liquid effluent piping system within the concrete vault, including connection to the exterior collection system and to the pumped effluent line immediately outside the vault. *Refer to Section 02735 "LIQUID EFFLUENT SYSTEM"* for exterior sewer and liquid effluent piping systems.

B. Provide liquid effluent pumps as herein specified and as indicated on drawings. Types of pumps specified in this section include the following:

1. Sump pumps.

2. Frame-mounted centrifugal, polypropylene pumps.

3. Sampling pumps.

C. Refer to Section 15140 "Supports and Anchors" paragraph I.C.2.d for support and seismic restraint pumps.

D. Provide ion exchangers and associated accessories as herein specified and as indicated on the drawings.

E. Ion exchangers shall be filled with a nuclear grade mixed bed resin and shall be furnished with the following accessories:

1. Quick disconnects on inlet and outlet of each ion exchanger.

2. An in-line resistivity monitor with a one-megohm/cm sensor.

F. Provide cartridge-type water filter in liquid effluent line to the ion exchangers.

G. Provide flow meter in the branch line to each ion exchanger.

H. Provide liquid effluent tanks as herein specified and as indicated on the drawings.

I. Types of tanks specified in this section include the following:

1. Round upright, flat bottom, open top with lid, fabricated of high-density polyethylene.

J. Provide galvanized tank tie-down assembly to protect tanks from earthquakes. Assembly shall meet Seismic Risk Zone 4 requirements of the Uniform Building code and shall be certified by a registered structural engineer in the State of California.

K. Provide 50 mm *(2")* thick fiberglass reinforced plastic grating as a support pad under each tank.

L. Provide industrial tank mixers and aerators as herein specified and as indicated on the drawings.

M. Types of tank mixers specified in this section include the following:

1. Portable propeller agitator with clamp type mount and gear drive.

N. Types of tank aerators specified in this section include the following

1. Flat plat holder with porous membrane.

O. Provide industrial ventilation fans as herein specified and as indicated on the drawings.

P. Types of fans specified in this section include the following:

1. Centrifugal fans direct connected with cast iron housings.

1.03 QUALITY ASSURANCE

A. Piping

1. Manufacturer's Qualifications: Firms regularly engaged in manufacturing of industrial waste systems products of types. materials and sizes required, whose products have been in satisfactory use in similar service for not less than 5 years.

2. Codes and Standards:

a. Plumbing Code Compliance:

(1) Comply with applicable portions of (IAPMO) Uniform Plumbing Code pertaining to plumbing materials, construction and installation of products.

b. ANSI Compliance:

(1) Comply with applicable ANSI standards pertaining to materials, products and installation of liquid effluent systems.

c. ASSE Compliance:

(1) Comply with applicable ASSE standards pertaining to materials, products, and installation of the liquid effluent systems.

B. Pumps

1. Manufacturers Qualifications: Firms regularly engaged in manufacture of liquid effluent pumps of types, materials, and sizes required, whose products have been in satisfactory use in similar service for not less than five years.

2. Codes and Standards:

a. HI Compliance: Design, manufacture, and install equipment and pumps in accordance with HI "Hydraulic Institute Standards."

b. UL Compliance: Design, manufacture, and install equipment and pumps in accordance with UL778 "Motor Operated Water Pumps."

c. UL and NEMA Compliance: Provide electric motors and components which are listed and labeled by Underwriters' Laboratories and comply with NEMA standards.

d. SSPMA Compliance: Test and rate sump pumps in accordance with Sump and Sewage Pump Manufacturers' Association (SSPMA) and provide certified rating seal.

3. Certification, Pump Performance: Provide pumps whose performances, under specified operating conditions, are certified by manufacturer.

C. Ion Exchange Unit

1. Manufacturer's Qualifications: Firms regularly engaged in manufacture of ion exchanger units, filters, and flow meters of types, materials, and sizes required, whose products have been in satisfactory use in similar service for not less than five years.

D. Effluent Tanks

1. Manufacturer's Qualifications: Firms regularly engaged in manufacture of tanks of types, materials, and sizes required, whose products have been in satisfactory use in similar service for not less than five years.

2. Warranty: Each tank shall be warranted for five years to be free of defects in material and workmanship.

3. Each tank shall be factory leak tested.

4. Manufacturer must furnish documented gel test results with 0.794mm *(1/32")* inner wall reading no less than 65% gel and outer wall no less than 90% gel. Entire thickness must be more than 80% gelled. Procedure to run as described in Phillips Technical Bulletin SSL-193.

E. Mixers and Aerators

1. Manufacturer's Qualifications: Firms regularly engaged in manufacture of tank mixers and aerators of types, materials, and sizes required, whose products have been in satisfactory use in similar service for not less than five years.

2. Codes and Standards:

   a. UL and NEMA Compliance: Provide electric motors and components which are listed and labeled by Underwriters' Laboratories and comply with NEMA standards..

F. Exhaust Fans

1. Manufacturer's Qualifications: Firms regularly engaged in manufacture of industrial ventilation fans of type, material, and size required, whose products have been in satisfactory use in similar service for not less than five years.

2. Codes and Standards:

   a. AMCA Compliance: Provide centrifugal fans bearing the AMCA Certified Ratings Seal, Sound rate centrifugal fans in accordance with AMCA 300 "Test Code for Sound Rating Air Moving Devices".

   b. ASHRAE Compliance: Test and rate centrifugal fans in accordance with ASHRAE 51 (AMCA 210) "Laboratory Methods of Testing Fans for Rating".

c. UL Compliance: Provide centrifugal fan electrical components which have been listed and labeled by UL.

1.04 SUBMITTALS

A. All submittals shall comply with the requirements of Section 01300 of Division 1 - "GENERAL REQUIREMENTS".

1. Product Data: Submit manufacturer's technical product data and specifications for all liquid effluent systems materials, equipment, and products listed:

a. Manufacturer's technical product data for liquid effluent systems piping.

b. Manufacturer's pump specifications, installation and start-up instructions, and current accurate pump characteristic performance curves with selection points clearly indicated.

c. Manufacturer's specifications, installation and start-up instructions for ion exchangers.

d. Manufacturer's tank specifications and installation instructions.

e. Manufacturer's mixer and aerator specifications, installation and start-up instructions.

f. Manufacturer's fan specifications, installation and start-up instructions, and fan performance curves.

2. Shop Drawings: Submit manufacturer's assembly-type shop drawings indicating dimensions, required clearances, weight loadings and methods of assembly of components for approval prior to construction. Include certified drawings of seismic restraints.

3. Gel test results as described above.

4. Wiring Diagrams: Submit manufacturer's electrical requirements for power supply wiring. Submit manufacturer's ladder-type wiring diagrams for interlock and control wiring. Clearly differentiate between portions of wiring that are factory-installed and portions to be field-installed.

5. Maintenance Data: Submit maintenance data and parts lists for each type of pump, control, and accessory; including "trouble-shooting" maintenance guide and ion exchangers and accessories. Include this data, product data, shop drawings, and wiring diagrams in maintenance manual; in accordance with requirements of Division 1.

6. Record Drawings: At project closeout, submit record drawings of installed liquid effluent systems, in accordance with requirements of Division 1.

1.05 PRODUCT DELIVERY, STORAGE, AND HANDLING

A. Handle all equipment and components carefully to prevent damage, breaking, denting and scoring. Do not install damaged equipment or components; replace with new.

B. Store equipment and components in clean dry place. Protect from weather, dirt, fumes, water, construction debris, and physical damage.

C. Comply with manufacturer's rigging and installation instructions for unloading equipment and components and moving them to final location.

PART 2 - PRODUCTS

2.01 PIPING

A. Piping Materials and Products:

1. Provide piping materials and factory-fabricated piping products of sizes, types, pressure ratings, and capacities as specified. Where not specified, provide proper selection to comply with installation requirements. Provide sizes and types matching piping and equipment connections; provide fittings of materials which match pipe materials used in plumbing systems. Where more than one type of materials or products are indicated, selection is Contractor's option.

B. Basic Identification:

1. Provide identification complying with Section 15190: "MECHANICAL IDENTIFICATION", in accordance with the following listing.

a. Aboveground Liquid Effluent Piping: Plastic Pipe markers.

b. Butterfly Valves Shown on Graphic Panel: Label all butterfly valves that are shown on the Graphic Panel in a duplicate manner with laminated plastic tags and identical nomenclature.

C. Basic Pipes and Pipe Fittings:

1. Liquid Effluent and Vent Piping:

a. Gravity piping from the connection immediately outside of the vault to the tanks; from the tanks to the suction flange of the pumps; and for the sink drain: "GSR Fuseal" polypropylene and pipe fittings.

b. Pressure piping from the pump discharge to the connection to the pumped effluent line to the sanitary sewer immediately outside the ault; to the truck load-out fitting; and to and from the ion exchangers: Schedule 80 PVC with solvent welded joints and socket weld fittings.

c. General criteria for piping is: for gravity lines, use propylene; for pressure pipe, use PVC.

d. Sampling piping from the pump discharge to and from the sampling tubes: Nalgene 180, general purpose, clear PVC tubing installed in rigid, zinc coated steel electrical conduit for support and rigidity. Make end connections to barb fittings or adapters with stainless steel hose clamps.

2. Basic Supports and Anchors: Provide supports and anchors complying with Section 15140 "SUPPORTS AND ANCHORS".

3. Mechanical Sleeve Seals:

a. General: Modular mechanical type, consisting of interlocking synthetic rubber link shapes to continuously fill annular space between pipe and sleeve, connected with bolts and pressure plates which cause rubber sealing elements to expand when tightened, providing watertight seal and electrical insulation.

b. Manufacturer: Subject to compliance requirements, provide mechanical sleeve seals of one of the following:

(1) Thunderline.

(2) Link Seal.

4. Butterfly valves:

a. General: Butterfly valves shall be made of polypropylene body and wafer with viton seat and stainless steel shafts. Flange holes shall be standard 1035kpa *(150-pound)* pattern. Flange bolts and nuts shall be stainless steel. Gaskets shall be Viton.

b. Extended operators shall be provided where shown on drawings. Where extended operators are not shown, provide lever type operators.

c. All butterfly valves shall be provided with position switches that close when the valve is cracked open. Switches shall be in NEMA 4X enclosures.

d. Manufacturers: Subject to compliance with requirements, provide butterfly valves of one of the following:

(1) ASAHI/AMERICAN

(2) Posacon

5. Ball Valves:

a. General: Ball valves shall be made of polypropylene bodies with teflon seats and viton O-rings, stainless steel shaft reinforcement. Valves shall be true union type trunion design with tee handle. Connections shall be standard FPT and be assembled using teflon tape.

b. Manufacturer: Subject to compliance with requirements, provide ball valves of one of the following:

(1) Plast-O-Matic, Inc.

(2) ASAHI/AMERICAN

6. Flexible Connections:

a. General: Flexible connections shall be provided as shown on drawings. Connections shall be made of Nalgene 180, general purpose, clear PVC tubing assembled to male threaded NPT x hose barb adapters of polypropylene material. Secure tubing to barb fitting using stainless steel hose clamps. Lengths shall be 150mm *(6")* of tubing plus that required to slip over barbs.

b. Manufacturers: Subject to compliance with requirements, provide flexible connections of one of the following:

(1) PolyCal Plastics.

(2) Harrington Plastics.

2.02 PUMPS

A. Pumps:

1. General: Provide factory-tested pumps, thoroughly cleaned, primed and painted with one coat epoxy enamel prior to shipment. Type, size, and

capacity of each pump is listed in pump schedule. Provide pumps of same type by same manufacturer.

B. Sump Pumps:

1. General: Provide duplex sump pumps as indicated, of size and capacity as scheduled.

2. Pump: Centrifugal, semi-open impeller type sump pump, complete with galvanized-steel strainer, cast-iron base plate, suction plate and casing, and cast-iron or bronze impeller.

3. Shaft: Stainless steel of length to suit depth of basin, connected with flexible coupling to motor, and intermediate sleeve bearing for lengths over 1.2 m *(4 feet).*

4. Motor: Totally enclosed fan-cooled (TEFC) electrical characteristics as scheduled.

5. Basin: Steel construction of indicated dimensions, bitumastic coated inside and out with inlet connections of size and location as indicated. Maintain minimum of 1 m *(3-feet)* depth below lowest inlet invert.

6. Cover: Cast-iron circular cover with manhole or handhole opening, depending on diameter. Provide openings for pump, control rod, and discharge piping.

7. Controls: Provide watertight NEMA Type 4X conductance actuated type level controls similar to Warrick. Provide watertight NEMA Type 4x wall mounted control panel containing motor starters, circuit breakers, alternator, HOA switches and pilot lights.

8. Manufacturer: Subject to compliance with requirements, provide pedestal type sump pumps of one of the following:

    a. Paco Pump Co.

    b. Ingersoll-Rand Co.

    c. Peerless Pump

    d. Weil Pump Co.

    . Weinman Pump LFE Corp.; Fluids Control Div.

C. Frame-Mounted Centrifugal, Polypropylene Pumps:

1. General: Provide frame-mounted centrifugal end suction polypropylene pumps where indicated, and of capacities and having characteristics as scheduled.

2. Type: Horizontal mount, single stage, vertical split case, flexible coupling, base mounted, designed for 1210 kpa *(175 psi)* working pressure. Non-overloading.

3. Casing: Polypropylene, 865 kpa *(125 psi)* ANSI flanges, tapping for gauges and drain.

4. Shaft: Stainless steel with replaceable shaft sleeve.

5. Bearings: Regreasable ball bearings.

6. Seal: Mechanical, with carbon ring and ceramic seal with seal flushing box and connections for cold water.

7. Motor: TEFC, regreasable ball bearings.

8. Impeller: Enclosed type, polypropylene, hydraulically and dynamically balanced, keyed to shaft.

9. Baseplate: Structural steel with welded cross members and open grouting area. Coat with epoxy paint for corrosion resistance.

10. Coupling: Flexible, capable of absorbing torsional vibration, equipped with coupling guard.

11. Manufacturer: Subject to compliance with the requirements, provide pump from the following:

    a. Vanton Plastic Pump Co.

D. Sampling Pumps:

1. General: Provide sampling pumps where indicated, and of the capacities and having the characteristics as scheduled.

2. Type: Leakproof seal-less nonsubmersible magnet-driven chemical pumps.

3. Casing: Glass-filled Ryton with Viton O-ring.

4. Shaft and Thrust Washers: Alumina Ceramic.

5. Impeller Bushing: Self-lubricating carbon.

6. Seal: None required. Leakproof seal-less magnetic drive.

7. Impeller: Glass-filled Ryton with encapsulated driven magnet.

8. Motor: TEFC with regreasable ball bearings.

9. Manufacturer: Subject to compliance with the requirements provide sampling pumps from the following:

    a. Little Giant Pump Co.

2.03 ION EXCHANGE SYSTEM

A. Ion Exchangers:

1. General: Type, size, and capacity of each ion exchanger is listed in equipment schedule.

2. Body: The body shall be manufactured of fiberglass reinforced plastic with a polyethylene liner.

3. Resin: Resin shall be nuclear grade mixed bed, IONAC NM-60 or equal.

4. Connections: Connections shall be furnished with quick disconnects with male hose shanks.

5. Resistivity Monitor: Provide an in-line, battery-operated resistivity monitor with liquid crystal displays for "low battery charge" and "water resistivity". Body sized for 20 mm *(3/4")* pipe. Monitor shall provide for 3 resistivity set points of 0.2, 1.0 and 2.0 megaohms/cm. Unit shall operate on 4 type AA batteries. Also provide a remote unit for the resistivity monitor.

6. Manufacturer: Continental Water Systems Corporation Model SDIM 2951 or approved equal.

B. Filter:

1. Housing: The housing and all internal parts shall be 304 stainless steel sized to receive double-length cartridges that are 66.7 mm *(2-5/8")* diameter x 495.3 mm *(19-1/2 ")* long with 25mm *(1")* diameter center hole. Bottom of housing shall be furnished with a petcock drain. Piping connections shall be 20 mm *(3/4 ")* FPT. Housing cap shall be drilled and tapped for mounting bracket and be furnished complete with mounting bracket.

2. Cartridge: The cartridge shall be grooved type made of cellulose fiber and melamine resin with a micron rating of 5 microns. Size of cartridge shall 66.7

mm *(2-5/8")* diameter x 495.3 mm *(19-1/2 ")* long with 25mm *(1")* diameter center hole.

3. Manufacturer: AMF Cuno or approved equal.

    a. Housing: Model 1B2 Catalog No. 40294-12 with petcock.

    b. Mounting bracket: Catalog No. 35581-01.

    c. Cartridge: Catalog No. G78B2-2.

C. Flow Meters

1. General: Glass tube variable-area flowmeters for water service providing visual indication of flow rate, using scale calibrated to read directly in GPM. Glass tube shall be removable using buna N O-ring seals. End fittings shall be stainless steel and rotatable. Flowmeters shall be provided with polycarbonate shield to protect personnel from glass fragments in the event of accidental tube rupture. End fittings shall be threaded for in-line mounting. Float to be stainless steel.

2. Accuracy: ±2% of full scale.

3. Connections:

    a. Inlet: Vertical threaded.

    b. Outlet: Horizontal threaded.

4. Size:

    a. Tube: 25 mm *(1").*

    b. Connections: 20 mm *(3/4")* NPT

    c. Max. Flow: 0.5 l/s *(8 GPM)*

5. Manufacturer: Fischer & Porter Model 10A3551SXXX or approved equal.

2.04 TANKS

A. Tanks:

1. General: The tanks shall be manufactures of high density cross-linked rotationally molded polyethylene, thoroughly cleaned after installation, reinforced as required, and with brackets, nozzles, and appurtenances as shown on the drawings and as required. Provide seismic lateral restraints

designed for seismic Zone 4 and conforming to the Uniform Building Code, 1982 edition.

2. Outlets: Provide all necessary flanged and threaded outlets for the proper connection of all piping as per the contract drawings. Flanges shall be ANSI 125 psi. Fittings shall be compression type, PVC long shank, double nut, high torque design. All gaskets shall be manufactured of closed cell cross-linked polyolefin material.

3. Reinforcing: Reinforce the top of each tank with an internal flange around the perimeter of the tank.

4. Lids: Provide a lid for each tank. Lids shall be loose fitting fabricated from same materials as tank, crowned and reinforced so they do not dish down and trap rainwater. Lids are not fastened down. Lids shall be provided with a 483 mm *(19")* manway with hinged cover and other holes as indicated on the drawings.

5. Nominal size of each tank shall be 3 m *(10')* diameter by 2.8 m *(9'-1")* high. Wall thickness shall be designed to meet the requirements of the Barlow formula or water.

6. Manufacturer: Subject to compliance with the requirements provide round tanks from one of the following:

   a. Poly Cal Plastics,Inc., French Camp, CA

   b. Poly Processing Co., Inc., Monroe, LA

   c. Nalgene

   d. Harrington Plastics

   e. Paramount Plastic Fabricators

B. Tank Support Pad:

1. Furnish and install rigid, 50 mm *(2")* thick glass fiber reinforced composite channel type grating. Duradek Series T-5000 or equal, under the entire bottom of each storage tank. Panels shall be constructed to allow any liquid on the floor to drain between the bearing bars.

2. Material shall be fire-retardant isophlalic polyester resin in standard gray color.

3. Manufacturer: Subject to compliance with the requirements, provide grating of one of the following:

a. Aligned Fiber Composites, Inc., (Duradek). Source: J.T. Ryerson & Son, Inc., Plastics Division

b. Easco Industrial Products.

2.05 MIXERS AND AERATORS

A. Mixers:

1. General: Provide factory-tested mixers, thoroughly cleaned, primed and painted with one coat epoxy enamel prior to shipment.

2. Mixers: Portable propeller mixers consisting of a TEFC chemical duty motor driving through a helical steel gear rated AGMA Class III to a final speed of 350 rpm, and having permanently lubricated gears and bearings, precision quill shaft mount, aluminum housing and clamp type mount, 40 mm x 2540 mm *(1.5" x 100")* shaft, 330 mm *(13")* three blade super pitch propeller, stabilizer rings with wetted parts of 304 stainless steel.

3. Manufacturer: Subject to compliance with requirements, provide tank mixers of one of the following:

a. Philadelphia Mixers

b. Chemineer

c. Lightnin

B. Aerators:

1. Provide aerators composed of flat plate non-polar polyolefin porous membrane diffuser factory-installed in an ABS plastic precast holder using all stainless steel bolts, nuts, washers, membrane retainer, etc. Unit shall be factory-assembled and ready to receive field installation of concrete ballast.

2. Manufacturer: Environmental Dynamics, Inc., MODEL REEF I.

2.06 FANS

A. General: Provide factory-tested fans, thoroughly cleaned, primed and painted with one coat epoxy enamel prior to shipment. Type, size and capacity of each fan is listed in equipment schedule.

B. Type: Centrifugal fan, direct drive, forward curved steel wheel. cast-iron housing, and mounting base.

C. Motor:Provide TEFC permanent split-capacitor motor with overload protection.

D. Bearings: Provide grease-lubricated ball bearings.

E. Drain: Provide drain hole in bottom of fan scroll.

F. Manufacturer: Subject to compliance with requirements, provide fans from the following:

1. Buffalo Forge Company

PART 3 - EXECUTION

3.01 PIPING

A. Inspection: Examine substrates and conditions under which liquid effluent systems are to be installed. Do not proceed with work until unsatisfactory conditions havebeen corrected.

B. Installation of Basic Identification: Install mechanical identification in accordance with Section 15190 "MECHANICAL IDENTIFICATION". Locate and mount valve tags on butterfly valves (or extension handles) for all valves identified on the Graphic Panel for quick and easy identification.

C. Installation of Supports and Anchors: Install supports and anchors in accordance with Section 15140 "SUPPORTS AND ANCHORS".

D. Installation of Drainage Piping products:

1. Cleanouts: Install in piping as indicated, and as required by Uniform Plumbing Code.

E. Installation of Fuseal Piping: Install piping in accordance with the recommendations of the manufacturer. The Fuseal power unit shall be the type that automatically adjusts for voltage levels and ambient temperature. Use compression clamp on the socket during heating process. A Fuseal factory representative shall be provided to instruct the fitters as to the proper method of joining the polypropylene piping.

F. Installation of PVC piping: Install piping in accordance with the recommendations of the manufacturer. Solvent cementing shall be in compliance with GSR Bulletin #GCJ "Solvent Cementing Procedure". Connections shall be joined with primer and PVC solvent cement, complying to ASTM D2564.

G. Protective Finishes for PP and PVC piping: All polypropylene (PP) and polyvinylchloride (PVC) piping exposed to the air (not buried) shall be painted with one coat of DuPont #329S primer or equal, and one coat of latex enamel. Color as selected by the Sandia Delegated Representative.

H. Equipment Connections:

1. Piping Runouts to Fixtures: Provide piping runouts to plumbing fixtures and drains, without trap, of sizes indicated.

2. Connect piping to tanks and equipment through flexible connections where connections are at the bottom half of tank. Connections to the top half of tank may be solid flanged or screwed.

I. Field Quality Control:

1. Piping Tests:

a. Gravity and vent piping: Test systems by plugging all outlets and filling the lines with water to a level of 4.5 m *(15 feet)* above the highest point of the system. The systems shall hold this water for one hour without showing a drop in water level greater than one inch. All joints shall be inspected for visible leaks.

b. Pressure piping: Test systems hydrostatically at 345 kpa *(50 psig)*; the systems shall show no drop in pressure in a 2-hour period.

J. Adjusting and Cleaning: Clean system, both externally and internally. Flush and inspect all piping for proper operation and draining.

K. Protection: Protect drains during remainder of construction period, to avoid clogging with construction materials and debris, and to prevent damage from traffic and construction work.

3.02 Pumps

A. Inspection: Examine areas and conditions under which the pumps are to be installed. Do not proceed with work until unsatisfactory conditions have been corrected in manner acceptable to Installer.

B. Installation of Pumps:

1. General: Install pumps where indicated, in accordance with manufacturer's published installation instructions, complying with recognized industry practices to ensure that installation complies with requirements and serve intended purposes.

2. Access: Provide access space around pumps for service as indicated, but in no case less than that recommended by manufacturer.

3. Support: Install base-mounted pumps on minimum of 125 mm *(4-inch)* high concrete base with anchor bolts poured into place. Set and level pump, grout under pump base with non-shrink grout.

4. Basins: Install sump pump basin in indicated location and connect to piping as shown. Refer to Section 03330 "CAST-IN-PLACE CONCRETE" for concrete work; not work of this section. Set cover over basin, fasten to top flange of basin.

5. Electrical Wiring: Install electrical devices furnished by manufacturer but not specified to be factory-mounted. Furnish copy of manufacturer's wiring diagram submittal to Electrical Installer.

   a. Verify that electrical wiring installation is in accordance with manufacturer's submittal and installation requirements of Division-16 sections. Do not proceed with equipment start-up until wiring installation is acceptable to equipment installer.

6. Piping Connections: Refer to Division-15 plumbing and piping sections. Provide piping, valves, accessories, gages, supports, and flexible connections as indicated.

C. Adjusting and Cleaning:

1. Alignment: Check alignment, and where necessary, realign shafts of motors and pumps within recommended tolerances by manufacturer, and in presence of manufacturer's service representative.

2. Start-Up: Lubricate pumps before start-up. Start-up in accordance with manufacturer's instructions.

3. Cleaning: Clean factory-finished surfaces. Repair any marred or scratched surfaces with manufacturer's touch-up paint.

4. Operate pumps and check for proper rotation and performance.

3.03 ION EXCHANGERS

A. Inspection: Examine areas and conditions under which the ion exchangers, etc., are to be installed. Do not proceed with work until unsatisfactory conditions have been corrected in a manner acceptable to Installer.

B. Installation of Ion Exchangers:

1. General: Install ion exchangers where indicated, in accordance with manufacturer's published installation, complying with recognized industry practices to ensure that installation complies with requirements and serve intended purposes.

2. Access: Provide access space around ion exchangers for service as indicated, but in no case less than that recommended by manufacturer.

3. Support: Install supports for ion exchangers as detailed on the drawings.

4. Piping Connections: Provide piping, valves, filter, flowmeters, accessories, gages, supports, and flexible connections as indicated.

C. Cleaning: Clean factory-finished surfaces. Repair any marred or scratched surfaces with manufacturer's touch-up paint.

3.04 TANKS

A. Inspection: Examine areas and conditions under which the tanks are to be installed. Do not proceed with work until unsatisfactory conditions have been corrected in manner acceptable to Installer.

B. Installation of Tanks:

1. General: Install tanks where indicated, in accordance with manufacturer's published installation instructions, complying with recognized industry practices to ensure that installation complies with requirements and serve intended purposes.

2. Access: Provide access space around tanks for service as indicated, but in no case less than that recommended by manufacturer.

3. Support: Install tanks on 50 mm *(2")* thick fiberglass grating which is laid on reinforced concrete pad.

4. Refer to Secation 03330 "CAST-IN-PLACE CONCRETE" for concrete work; not work of this section.

C. Cleaning: Clean factory-finished surfaces. Repair any marred or scratched surfaces with manufacturer's touch-up material.

D. Identify tanks with 150 mm *(6")* high lettering per drawings.

3.05 MIXERS AND AERATORS

A. Inspection: Examine areas and conditions under which the mixers and aerators are to be installed. Do not proceed with work until unsatisfactory conditions have been corrected in manner acceptable to Installer.

B. Installation of Mixers:

1. General: Install mixers where indicated, in accordance with manufacturer's published installation instructions, complying with recognized industry practices to ensure that installation complies with requirements and serves intended purposes.

2. Electrical Wiring: Install electrical devices furnished by manufacturer but not specified to be factory mounted. Furnish copy of manufacturer's wiring diagram submittal to Electrical Installer.

a. Verify that electrical wiring installation is in accordance with manufacturer's submittal and installation requirements of Division-16 sections. Do not proceed with equipment start-up until wiring installation is acceptable to equipment installer.

C. Installation of Aerators: Install aerators where indicated in accordance with manufacturer's published installation instructions, complying with recognized industry practices to ensure that installation complies with requirements and serves intended purposes. Installation requires addition of concrete ballast in field.

D. Adjusting and Cleaning:

1. Start-Up: Start-up in accordance with manufacturer's instructions.

2. Cleaning: Clean factory-finished surfaces. Repair any marred or scratched surfaces with manufacturer's touch-up paint.

3. Operate mixers and aerators, and check for proper rotation and performance.

3.06 FANS

A. Inspection: Examine areas and conditions under which the fans are to be installed. Do not proceed with work until unsatisfactory conditions have been corrected in manner acceptable to Installer.

B. Installation of Fans:

1. General: Install fans where indicated, in accordance with manufacturer's published installation instructions, complying with recognized industry practices to ensure that installation complies with requirements and serve intended purposes.

2. Electrical Wiring: Furnish copy of manufacturer's wiring diagram submittal to Electrical Installer.

    a. Verify that electrical wiring installation is in accordance with manufacturer's submittal and installation requirements of Division-16 sections. Do not proceed with equipment start-up until wiring installation is acceptable to equipment installer.

C. Adjusting and Cleaning:

1. Start-Up: Lubricate fans before start-up. Start-up in accordance with manufacturer's instructions.

2. Cleaning: Clean factory-finished surfaces. Repair any marred or scratched surfaces with manufacturer's touch-up paint.

3. Operate fans and check for proper rotation and performance.

END OF SECTION

SECTION 15493

LABORATORY DRAINAGE SYSTEMS

PART 1 - GENERAL

1.01 RELATED DOCUMENTS

A. Drawings and general provisions of Contract, including General and Supplementary Conditions and Division 1 Specification sections, apply to work of this section as if repeated herein.

1.02 DESCRIPTION

A. Extent of laboratory drainage systems work is indicated on drawings and schedules, and by requirements of this section.

B. Trenching and backfill required in conjunction with laboratory drainage piping inside of building is specified in applicable Division-2 sections, and is included as work of this section.

1.03 QUALITY ASSURANCE

A. Manufacturer's Qualifications: Firms regularly engaged in manufacture of laboratory drainage systems products, of types, materials, and sizes required, whose products have been in satisfactory use in similar service for not less than 5 years.

B. Codes and Standards:

1. PDI Compliance: Fabricate and install laboratory drainage systems in accordance with PDI "Code Guide 302".

2. UPC Compliance: Fabricate and install laboratory drainage systems in accordance with IAPMO "Uniform Plumbing Code".

1.04 SUBMITTALS

A. Product Data: Submit manufacturer's technical product data and installation instructions for laboratory drainage systems materials and products.

B. Shop Drawings: Submit scaled layout drawings of laboratory drainage systems piping and fittings including, but not necessarily limited to, pipe and tube sizes, locations, elevations, and slopes of horizontal runs, wall and floor penetrations, and connections. Show interface and spatial relationship between piping and proximate equipment.

C Record Drawings: At project closeout, submit record drawings of installed piping and laboratory drainage systems products; in accordance with requirements of Division 15, Section "BASIC MECHANICAL REQUIREMENTS".

D. Maintenance Data: Submit maintenance data and parts lists for laboratory drainage systems materials and products. Include this data, product data, shop drawings, and record drawings in maintenance manual; in accordance with requirements of Division 15, Section "BASIC MECHANICAL REQUIREMENTS".

PART 2 - PRODUCTS

2.01 MATERIALS AND PRODUCTS

A. General: Provide piping materials and factory-fabricated piping products of sizes, types, pressure ratings, temperature ratings, and capacities as specified. Where not indicated, provide proper selection as determined by Installer to comply with installation requirements. Provide sizes and types matching piping and equipment connections; provide fittings of materials which match pipe materials used in laboratory drainage piping systems.

2.02 BASIC IDENTIFICATION

A. General: Provide identification complying with Section 15190, "MECHANICAL IDENTIFICATION".

2.03 PIPES AND PIPE FITTINGS

A. Polypropylene Drainage System

1. Pipe and fittings Schedule 40 wall thickness: Pipe shall meet requirements of ASTM D2146. System to include pipe supplied in 3 m*(10 ft.)* lengths, fittings and traps. Include recommended adapters to connect to other piping material where applicable. Fittings shall be drainage pattern.

2. Materials: Pipe shall be made from flame retardant polypropylene with maximum average flame time of zero seconds and maximum extent of burning of 15 mm*(0.5")* in accordance with ASTM D635. Fittings shall be made from flame retardant polypropylene with maximum average burn time of 80 seconds and maximum extent of burning of 20 mm*(3/4")* in accordance with ASTM D635.

3. Joints: Polypropylene pipe and fittings below ground shall be joined by means of heat fusion socket joints. Polypropylene pipe and fittings above ground shall be jointed using the manufacturer's standard mechanical joint fittings. Connections between polypropylene and other type of piping material shall be

made with mechanical joint adapters according to manufacturer's recommendations.

4. Floor drains shall be polypropylene with flange, strainer, and adjustable collar.

5. Manufacturers: Enfield Industrial Corp.
   R & G Sloane Mfg. Co., Inc.
   Orion Industries, Inc.

6. Polypropylene Drainage System shall be used for all drainage systems identified as acid waste and acid vent.

B. High-Silicon Cast Iron Pipe Drainage System

1. Pipe and Fittings: High (14.2-14.75 percent) silicon content cast iron drainage piping of the size indicated, complying with ASTM A 518, "Standard Specification for Corrosion-Resistant High-Silicon Cast Iron". Vents shall be of same material as waste lines.

   a. Underground piping shall be hub and plain end with hub and spigot fittings.

      (1) Joints: Joints and lines carrying laboratory waste shall be made by firmly and carefully ramming special acid resistant packing into the bottom of the hub until the hub is approximately one-half full. Upon this shall be poured a sufficient amount of previously unused molten lead to completely fill the hub; the lead being properly caulked in the manner generally used with cast iron soil pipe.

   b. Above ground piping shall be plain end pipe and fittings.

      (1) Joints: Joints and lines carrying laboratory wastes shall be made with Durco Type MJ Mechanical Coupling with continuous, one-piece, sintered, non-porous, PFTE liner. Acid waste must be in contact only with PFTE or Duriron. Couplings to be installed in strict accordance with manufacturer's recommendations.

      (2) Cleanouts: Suitable cleanout plugs shall be provided as shown on the drawings. Cleaning of lines may be done either with mechanical sewer auger or chemicals or by removing plugged section from line.

      (3) Hanging: Proper supports shall be provided; at least one support to each length of pipe in horizontal lines, one at each bend, and supports at intervals no greater than fourteen feet in vertical lines. Support shall be made directly near the coupling, not in the center of the pipe. Support P-Traps individually.

(4) Floor Drains: Floor drains shall be of Duriron double drainage type.

2. Manufacturer: The Duriron Co. Inc.

3. High-Silicon cast iron pipe drainage system shall be used on all drainage systems identified as Acid Waste and Acid Vent in mechanical buildings.

2.04 BASIC PIPING SPECIALTIES

A. General: Provide piping specialties complying with Division-15, "BASIC MECHANICAL MATERIALS AND METHODS" section, in accordance with the following listing:

Pipe escutcheons
Drip pans
Vandal-proof vent caps
Pipe sleeves
Sleeve seals

PART 3 - EXECUTION

3.01 INSPECTION

A. General: Examine areas and conditions under which laboratory drainage systems materials and products are to be installed. Do not proceed with work until unsatisfactory conditions have been corrected.

3.02 INSTALLATION OF PIPING

A. Install laboratory drainage piping with 6.4mm per 0.3 m *(1/4" per foot)* (2%) downward slope in direction of drain for piping 80 mm *(3")* and smaller, and 3.2 mm per 0.3 m *(1/8" per foot)*(1%) for piping 100 mm *(4")* and larger.

B. Installation shall comply with applicable codes and manufacturer's installation instructions.

C. Flashing Flanges: Install flashing flange and clamping device with each cleanout passing through waterproof membrane.

3.03 INSTALLATION OF SUPPORTS AND ANCHORS

A. Install supports and anchors in accordance with Division-15 Basic Mechanical Materials and Methods section "Supports and Anchors". Locate spacing for supports and anchors in accordance with piping manufacturer's recommendations.

3.04 INSTALLATION OF LABORATORY DRAINAGE PIPING PRODUCTS

A. Cleanouts: Install in laboratory drainage piping as indicated, as required by Uniform Plumbing Code; at each change in direction of piping greater than 45 degrees; at minimum intervals of 15 *(50')* for piping 100 mm *(4")*and smaller and 30 m *(100')* for larger piping. Install floor and wall cleanout covers for concealed piping, select type to match adjacent building finish.

3.05 EQUIPMENT CONNECTIONS

A. Drain Connections to Fixtures: Provide drain piping and traps for each fixture indicated to be connected to laboratory drainage system. Provide size indicated, but in no case smaller than that required by Uniform Plumbing Code.

B. Mechanical Equipment Connections: Provide drain piping and traps for each item of mechanical equipment indicated to be connected to laboratory drainage system. Comply with manufacturer's installation instructions.

3.06 TESTS

A. The entire laboratory drainage system shall be hydrostatically tested. The test shall comprise the plugging of all openings in the lines, filling the system, or portion thereof, with water to the roof level or a minimum of 3 m *(10 feet)* until all joints are proven tight with no leakage.

3.07 ADJUSTING AND CLEANING

A. Cleaning, Flushing, and Inspecting: Clean, Flush, and inspect laboratory drainage systems in accordance with requirements of Division-15 "BASIC MECHANICAL MATERIALS AND METHODS SECTION".

END OF SECTION

SECTION 15494

LABORATORY SUPPLY SYSTEMS

PART 1 - GENERAL

1.01 RELATED DOCUMENTS

A. Drawings and general provisions of Contract, including General and Supplementary Conditions and Division-1 Specification sections, apply to work of this section as if repeated herein.

B. Section 15050 "BASIC MECHANICAL MATERIALS AND METHODS" sections apply to work of this section.

C. California Fire Code, 2001 edition.

1.02 DESCRIPTION

A. Extent of laboratory supply systems work is indicated on drawings and by requirements of this section.

B. Refer to Divisions 11 and 12 for laboratory equipment.

C. This specification is limited in scope to the following gases: acetylene, helium, neon, argon, krypton, xenon, nitrogen, oxygen, air, carbon dioxide, carbon monoxide, nitric oxide, nitrous oxide, methane, ethane, propane, butane, dimethyl ether, ethylene, hydrogen, sulfur hexafluoride and mixtures thereof. Also included are the mixtures of 10% or less hydrogen chloride, 7% or less fluorine, and 10% or less of chlorine in a noble gas (herein referred to as halogen mixtures). Specifically excluded is anhydrous ammonia. Other gases may be admitted to this specification only by written consent of the SDR.

1.03 SUBMITTALS

A. Product Data: Submit manufacturer's technical product data and installation instructions for laboratory supply systems materials and products.

B. Shop Drawings: Submit scaled layout drawings of laboratory supply pipe and fittings including, but not necessarily limited to, pipe and tube sizes, locations, elevations, and slopes of horizontal runs, wall and floor penetrations, and connections. Indicate interface and spatial relationship between piping and proximate equipment.

C. Record Drawings: At project closeout, submit record drawings of installed piping, and laboratory supply systems products; in accordance with requirements of Division 15, Section 15010 "BASIC MECHANICAL REQUIREMENTS".

D. Maintenance Data: Submit maintenance data and parts lists of laboratory supply systems materials and products. Include this data, product data, show drawings, and record drawings, in maintenance manual; in accordance with requirements of Division 15, Section 15010 "BASIC MECHANICAL REQUIREMENTS".

1.04 QUALITY ASSURANCE

A. Manufacturer's Qualifications: Firms regularly engaged in manufacture of laboratory supply systems products, of types, materials, and sizes required, whose products have been in satisfactory use in similar service for not less than 5 years.

B. Installer Qualifications: Firm with at least 3 years of successful installation experience on projects with laboratory supply systems work similar to that required for project.

C. Codes and Standards:

1. ASME Compliance: Fabricate and install laboratory supply piping systems in accordance with ASME B31.9 "Building Services Piping".

2. The recommendations of the National Fire Protection Association (NFPA) National Fire Codes, for applicable gases shall be adhered to in all respects. The Contractor shall be responsible for compliance with all local, state, or federal codes applicable to this installation.

3. Gases shall be segregated according to ISO 10156 and DOT standards as oxidizers, flammable and non-flammable. Any mixture that is more oxidizing than air is an oxidizer, any mixture that exceeds the lower flammability limit in air is a flammable, all others are non-flammable. In addition to this any mixture may be classified as toxic and or corrosive.

PART 2 - PRODUCTS

2.01 MATERIALS AND PRODUCTS

A. General: Provide piping materials and factory-fabricated piping products of sizes, types, pressure ratings, temperature ratings, and capacities as indicated on the drawing and as specified herein. Provide sizes and types matching piping and equipment connections; provide fittings of materials which match pipe materials used in laboratory supply systems. All valves, specialties and accessories shall be factory cleaned for oxygen service per Linde Gas Company Specification GS-38 or equal. All electric solenoid valves in laboratory gas piping systems are integrated into the lab gas detection end alarm system and shall be provided in the normally closed configuration (supplied and installed by Division 15, wired by Division 16).

2.02 BASIC IDENTIFICATION

A. General: Provide identification complying with Division-15 Section 15190 "MECHANICAL IDENTIFICATION".

2.03 BOTTLED GAS PIPING SYSTEMS USING COPPER TUBING

A. Provide tubing, fittings, valves, pipe supports, and accessories specified herein for the following bottled gas piping systems:

Design Note: Use of copper tubing for flammable, oxidizing, or pyrophoric gasses must be approved by SNL Fire Protection (only allowed in sprinklered areas, see California Fire Code 8001.4.3.4)

Argon, Ar
Carbon Dioxide, CO_2
Helium, He
Hydrogen, H_2
Methane, CH_4
Nitrogen N_2/Bottled
Nitrogen N_2 (House) - 7/8" or less

1. Copper Tubing: High quality soft annealed (temper 0) seamless copper water tube type L per ASTM B88, cleaned and capped for oxygen service.

   a. Minimum wall thickness and swagelok series:

TUBE OD (IN)	WALL THICKNESS	WORKING PRESSURE	SWAGELOK
3/8	.035"	1000 PSI	B-600
1/2	.049"	1100 PSI	B-810
5/8	.049"	900 PSI	B-1010
3/4	.049"	700 PSI	B-1210
7/8	.065"	800 PSI	B-1410

2. Tubing Fittings:

   a. Manufacturers:

      (1) Swagelok co., Brass, with front and back ferrules, body and nuts. No substitutions.

3. Tube Valves:

a. Manufacturer: Whitey Co., Ball Valves with brass body, brass stem, color coded nylon handle with insert, TFE packing, TFE coated support rings, and silicone base lubricant, two way, three way switching or multi-port. Rated at 17250 kpa*(2500 psig)* or greater. No substitutions.

2.04 BOTTLED GAS PIPING SYSTEMS USING STAINLESS STEEL TUBING

A. Tubing, fittings, valves and accessories specified herein shall be provided for the following bottled gas piping systems:

Acetylene, C_2H_2
Nitrogen, N_2 (House) - over 25mm(1")
Oxygen, O2

1. Stainless Steel Tubing: Fully annealed high quality seamless, Type 316, stainless steel hydraulic tubing per ASTM A269 or A213, hardness Rb80 or less, free from scratches, suitable for bending, electropolished inside, outside finish shall be rated 10, cleaned and capped for oxygen service.

TUBE OD (IN)	WALL THICKNESS	WORKING PRESSURE	SWAGELOK
1/4	.028	4000 PSI	SS-400
5/16	.035	4000 PSI	SS-500
3/8	.035	3300 PSI	SS-600
1/2	.049	3500 PSI	SS-810
3/4	.065	3300 PSI	SS-1210
1	.083	3100 PSI	SS-1610

2. Tube Fittings:

a. Manufacturers:

(1) Swagelok Co., 316 stainless steel with front and back ferrules, body and nuts. No substitutions.

3. Tube Valves:

a. Manufacturer: Whitey Co., Ball valves with 316 stainless steel body, stainless steel stem, color coded nylon handle with insert, TFE packing, TFE coated support rings, and silicone base lubricant, two way, three way switching or multi-port, brass shall be acceptable for those locations specifically shown on drawings. Rated 3,000 psig or greater, no substitutions.

4. Oxidizer gases (including oxygen):

a. All components in contact with these gases which employs non-metallic seals or grease shall be specified for oxygen service, in particular the seals and or the grease shall be specifically rated for oxygen service to a pressure of 3000 psig.

b. All fittings shall be Swagelok NPT pipe, or VCR type. No substitutions.

5. Vent lines:

a. Vent lines shall be constructed from copper type "L", or black iron pipe. Oxygen service vent lines shall be 316 seamless stainless steel and so rated for oxygen service. Vent lines for oxides and flammables shall not be combined/mixed.

b. Vent systems shall be rated for operation at a pressure of 100 psig. The main line to the roof shall be nominal 3/4" or larger. The connections from the manifolds to the main line shall be less than 10' in length and shall be 3/8" tubing or larger.

2.05 BOTTLED GAS PIPING SYSTEMS USING STAINLESS STEEL TUBING AND AUTOMATIC ORBITAL BUTT WELDED STAINLESS STEEL FITTINGS

A. Tubing, fittings, valves, and accessories specified herein shall be provided for all halogen mixtures to include:

Fluorine, F2
Chlorine, CL
Nitric Oxide, NO
Nitric Dioxide, NO2
Sulfer Dioxide, SO2
Hydrogen Chloride, HCL
Carbon Dioxide, CO
Vinyl Chloride, VCL

1. Stainless Steel Tubing: Fully annealed high quality seamless, Type 316, stainless steel hydraulic tubing per ASTM A269 or A213, hardness Rb80 or less, free from scratches, suitable for bending, electropolished inside, outside finish shall be rated 10, cleaned and capped for oxygen service.

TUBE OD (IN)	WALL THICKNESS	WORKING PRESSURE	SWAGELOK
1/4	.035	5100 PSI	316L-4ATW
3/8	.035	3300 PSI	316L-6ATW
1/2	.049	3500 PSI	316L-8ATW

2. Automatic Buttweld Tube Fittings:

   a. Manufacturers:

      (1) Swagelok Co., 316L stainless steel automatic tube weld fittings (ATW). No substitutions.

3. Tube Valves Inside Gas Valve Enclosures:

   a. Manufacturer: Whitey Co., Ball valves with 316 stainless steel body, stainless steel stem, color coded nylon handle with insert, TFE packing, TFE coated support rings, and silicone base lubricant, two way, three way switching or multi-port, brass shall be acceptable for those locations specifically shown on drawings. Rated 3,000 psig or greater. No substitutions.

4. Vent lines:

   a. Vent lines shall be constructed from copper type "L", or black iron pipe. halogen service vent lines shall be 316 seamless stainless steel and shall not be combined/mixed with oxide vent lines.

   b. Vent systems shall be rated for operation at a pressure of 100 psig. The main line to the roof shall be nominal 3/4" or larger. The connections from the manifolds to the main line shall be less than 10' in length and shall be 3/8" tubing or larger.

2.06 GAS CYLINDER CABINETS:

A. General: Gas cabinets shall be factory fabricated standard product of the manufacturer. Cabinet shall have a cone shaped top or an internal baffle to prevent eddy currents at top of cabinet. Cabinet sizes shall accommodate one to four cylinders with manifolds and accessories as indicated on drawings.

B. Construction: Walls and roof shall be constructed of 2.9mm *(11 gage)* cold-rolled sheet steel. Deck shall be constructed of heavy diamond steel deck plate to resist deformation caused by cylinder impact and shall be installed flush with threshold. Seams shall be welded, ground, and filled to match base material; sharp edges and corners shall eliminated. Interior and exterior surfaces shall be primed and spray painted with a textured, readily cleanable, solvent-resistant paint.

C. Dimensions: Enclosures shall be the manufacturer's standard sizes for the number of cylinders indicated. Modification may be allowed if additional room is needed for the specialties and accessories mounted within the enclosures.

D. Fire Sprinklers: Each gas cylinder enclosure shall be equipped with a suitably rated and approved corrosion resistant, 100 deg C *(212 deg F)*, 15mm *(1/2 inch)* orifice fire sprinkler. A 25 mm *(1 inch)* male NPT fitting or the 15mm *(1/2 inch)* male NPT threads of the sprinkler head shall extend external to the enclosure and shall be provided for connection to facility sprinkler water supply

E. Doors: 1- and 2-Cylinder enclosures shall have one door opening at right; 3- and 4-cylinder enclosures shall have two doors opening in center of enclosure. Doors shall be constructed of 11 gage sheet steel with formed edges to enhance rigidity. Underwriter's Laboratory listed hydraulic closers designed for use in pressurized environments shall be installed. Heavy-duty stainless steel self-latching paddle type handles shall be installed. A cellular rubber gasket shall seal the door perimeter. Three welded heavy steel butt hinges shall be provided to assure permanent alignment. A suitable filter shall be installed behind each door louver. The door louver shall be sized to maintain a minimum 1.5 m/s *(300 fpm)* full velocity at the designated cfm.

F. Window: Window in door shall be equipped with 6.3 mm *(1/4 inch)* thick wire-reinforced safety glass.

G. Exhaust Port: An exhaust port shall be provided on the top surface of the cylinder enclosure.

H. Cylinder Brackets and Labels: A stand-off bracket capable of supporting a 150 to 250 mm *(6- to 10-inch)* cylinder shall be provided for each intended cylinder station within the gas cylinder enclosure. Each cylinder station shall be labeled on the door and on the gas cylinder enclosure inside rear wall with the full name (and chemical formula) of the intended gas.

I. Manufacturers: Matheson Gas Products Inc., Spectra Gases Inc. or approved equal.

J. Manifold valves, filters, and regulator shall be front-demountable without requiring removal of manifold from gas cylinder enclosure. All component bracket installation screws shall be accessible from front of manifold support plate.

K. Piping, regulators, valves, and filters shall be rigidly installed to prevent distortion and vibration; metal brackets or stabilizers shall be installed where required. Removable manifold assembly shall be installed on rigid panel attached to rear wall of gas cylinder enclosure with screws removable from the front of the panel.

L. All manifold valves and controls shall be labeled and described in the equipment operation manual. A gas flow diagram shall be provided on the manifold front panel.

M. The manufacturer may provide their particular manifold arrangement for each system providing it meets or exceeds the specified equipment and is approved by the Sandia Delegated Representative.

2.07 GAS VALVE ENCLOSURES

A. General: Gas valve enclosures shall be factory fabricated by the gas cylinder cabinet manufacturer.

B. Construction: Walls and roof shall be constructed of 11 gage cold-rolled sheet steel. Seams shall be welded, ground, and filled to match base material; sharp edges and corners shall be eliminated. Interior and exterior surfaces shall be primed and spray painted with a textured, readily cleanable, solvent-resistant paint which matches the gas cylinder cabinets.

C. Dimensions: Enclosures shall have external dimensions of 460 mm *(18 inches)* high by 460 mm *(18 inches)* wide by 300 mm *(12 inches)* deep.

D. Doors: Gas valve enclosures shall have one door opening at right of enclosure. Doors shall be constructed of 2.9 mm *(11 gage)* sheet steel with formed edges to enhance rigidity. A cellular rubber gasket shall seal the door perimeter and the window. Two welded heavy steel butt hinges shall be provided to assure permanent alignment. The door shall be provided with a 300 mm by 300 mm by 6.3 mm *(12 inch by 12 inch, 1/4 inch)* thick, wire-reinforced, safety glass window. Heavy-duty stainless steel self-latching paddle type handles hall be installed.

E. Openings: A six inch diameter exhaust port for connection to the exhaust duct shall be provided on the top surface of the cylinder enclosure. The bottom of the enclosure shall have a 405 mm by 150 mm *(16 inch by 6 inch)* opening to allow air to pass through the enclosure and tubing to drop out of the enclosure.

F. Brackets and Labels: Provide mounting brackets inside the enclosure similar to those detailed on the drawings to which the valves and regulators can be rigidly attached. Each gas valve enclosure shall be labeled on the door and on the inside rear wall with the full name (and chemical formula) of the intended gas or gases (Refer to Section 15190, MECHANICAL IDENTIFICATION). All components to be within the enclosure, up to and including the bulkhead fitting, shall be factory installed and cleaned.

G. Manufacturers:

Matheson Gas Products, Inc.
Spectra Gases, Inc.

Approved Equal

PART 3 - EXECUTION

3.01 INSPECTION

A. Examine areas and conditions under which laboratory supply systems and equipment are to be installed. Do not proceed with work until unsatisfactory conditions have been corrected in manner acceptable to the installer.

3.02 INSTALLATION OF BASIC IDENTIFICATION

A. General: Install mechanical identification in accordance with Division-15 section "MECHANICAL IDENTIFICATION".

3.03 INSTALLATION OF LABORATORY GAS SYSTEMS

A. General: Install laboratory supply tubing in accordance with Section 15050 "BASIC MECHANICAL MATERIALS AND METHODS", and as stated below.

B. Install tubing with 1/8" per foot (1%) downward slope in direction of flow.

C. Non-gas cabinet service:

1. Except as for oxygen service described below, these manifolds shall be assembled using Teflon tape on all threaded components.

2. Cut ends shall be deburred.

3. The lines shall be blown out with dry nitrogen to clean out any loose materials.

4. Tubing fittings shall be installed per manufacturer’s instructions in regards to the finish to the tubing, the quality of the cut end, and the tightening of the fitting.

5. Assemble lines and fittings promptly and cover/cap tube or fitting ends when not being directly assembled.

6. The gas manifolds and lines shall be proofed by leak test. The manifold and lines shall be pressurized to 90% of the relief valve set point and shall not over a period of 6 hours lose more than 1/2% of the set pressure as read on a pressure gauge. For helium and hydrogen gas service, the leak test gas shall be helium. For all other gas services, the leak test gas shall be dry nitrogen.

D. Gas cabinet service: (Mixtures classified as corrosive, this class shall include but not limited to mixtures containing halogens and oxides of nitrogen).

1. The contractor shall install all process gas tubing runs from these cabinets as shown per drawings. The gas cabinet service lines shall be installed by use of an automatic orbital TIG welding machine as descibed in Parker welded fittings catalog 4280 “Automatic Buttweld Principles of Operation”

2. The gas cabinet internal manifolds shall be delivered to the contractor pressurized with nitrogen. This shall be verified by the contractor and a loss of pressure in the delivered product shall be reported to the SDR. The contractor shall not relieve this pressure during installation.

3. Following installation and prior to acceptance, the contractor shall break the seals on the gas manifold and test the entire installation by a 24 hour helium leak test. A pressure gauge shall be attached to the delivery end of the system. The pressure gauge, manifold and lines shall be vented to ambient and then pressurized with helium to 95% of the relief valve set point, vented to ambient again and then repressurized with helium to 95% of the relief valve set point. Over the following 24 hour period the manifold and lines shall not lose pressure by more than 1/4% of that set as read by a pressure gauge. Following the proof, the pressure gauge shall be removed, the system resealed and repressurized with dry nitrogen to a minimum of 15 psig. If the proof fails, the location of the leak shall be identified with Snoop and the contractor shall repair the system at no additional cost to Sandia. Following any such repair, the system must be retested by the contractor at no additional cost to Sandia and pass the helium leak test described above.

E. Oxidizers:

1. For NPT pipe fittings, a combination of LOX-80 grease and Teflon tape shall be installed as the sealing material. The Teflon tape shall be applied as standard leaving the two to three turns of thread closest to the gas completely exposed. The exposed two to three turns of thread shall be coated with LOX-80 grease in an amount as per manufacturer’s instructions. Teflon tape shall not come into direct contact with the process gas.

2. In assembly, care shall be taken to minimize the introduction of any particulate, grease or other flammable materials in to oxygen rated systems. In such case that any part of an oxygen service system becomes so contaminated during assembly then that part shall be replaced by the contractor with a new part at no additional cost to Sandia. Any component not known to be specifically “oxygen service rated” shall be taken by definition to be not so rated.

F. Vent lines:

1. Flammable and oxidizing gases shall use separated vent lines. Non-flammable gases may be mixed in vent lines with either flammable or oxidizing gases. For the purpose of vent lines, any mixture containing a flammable gas shall be treated as a flammable and any mixture containing oxygen (e.g. air) shall be treated as an oxidizer. Oxides of nitrogen shall be vented in a separate vent line. Mixtures containing halogens may be mixed together in a separate vent line. Vent stacks shall be positioned around the building to mitigate against the direct mixing of oxidizer, flammable, oxides of nitrogen, and halogens.

3.04 INSTALLATION OF SPECIALTIES AND ACCESSORIES

A. Install tubing specialties, supports, anchors, valves, meters, gages, equipment connections, and accessories in accordance with manufacturer's instructions, details, drawings and this specification.

3.05 FIELD QUALITY CONTROL

A. Piping Tests: perform tests as stated above. Contractor shall provide all temporary gauges, meters, fittings, etc necessary to perform such tests at no additional cost to Sandia.

B. Repair or replace laboratory piping as required to eliminate leaks, and retest as specified above to demonstrate compliance to SDR at no additional cost to Sandia.

C. Cap (seal) ends of piping where not connected to mechanical equipment or regulators.

D. Contractor shall notify SDR 24 hours in advance of all tests to allow SDR the opportunity to witness such tests.

END OF SECTION

SECTION 15498

LABORATORY SUPPLY SYSTEMS
(LIQUID NITROGEN)

PART 1 - GENERAL

1.01 RELATED DOCUMENTS

A. Drawings and general provisions of Contract, including General and Supplementary Conditions and Division-1 Specification sections, apply to work of this section as if repeated herein.

B. Division-15 Section 15050 "BASIC MECHANICAL MATERIALS AND METHODS" and 15494 "LABORATORY SUPPLY SYSTEMS," apply to work of this section.

1.02 DESCRIPTION

A. Extent of laboratory supply system (liquid nitrogen) work, is indicated on drawings and schedules, and by requirements for this section.

B. Two tanks are required, one for liquid and one for gaseous nitrogen supply.

1.03 QUALITY ASSURANCE

A. Manufacturer's Qualifications: Firms regularly engaged in manufacture of laboratory supply systems products, of types, materials, and sizes required, whose products have been in satisfactory use in similar service for not less than 5 years.

B. Installer Qualifications: Firm with at least 3 years of successful installation experience on projects with laboratory supply systems work similar to that required for project.

C. Codes and Standards:

1. ASME Compliance: Fabricate and install laboratory supply piping systems in accordance with ASME B31.9 "Building Services Piping".

2. The recommendations of the National Fire Protection Association (NFPA) National Fire Codes, for applicable gases shall be adhered to in all respects. The Contractor shall be responsible for compliance with all local, state, or federal codes applicable to this installation.

1.04 SUBMITTALS

A. Product Data: Submit manufacturer's technical product data and installation instructions for laboratory supply systems materials and products.

B. Shop Drawings: Submit scaled layout drawings of laboratory supply pipe and fittings including, but not necessarily limited to, pipe and tube sizes, locations, elevations, and slopes of horizontal runs, wall and floor penetrations, and connections. Indicate interface and spatial relationship between piping and proximate equipment.

C. Record Drawings: At project closeout, submit record drawings of installed piping, and laboratory supply systems products; in accordance with requirements of Division 15, section "BASIC MECHANICAL REQUIREMENTS".

D. Maintenance Data: Submit maintenance data and parts lists for laboratory supply systems materials and products. Include this data, product data, shop drawings, and record drawings, in maintenance manual; in accordance with requirements of Division15 section "BASIC MECHANICAL REQUIREMENTS.

PART 2 - PRODUCTS

2.01 MATERIALS AND PRODUCTS

A. General: Provide identification complying with Division-15 section "MECHANICAL IDENTIFICATION".

2.02 LIQUID NITROGEN PIPING SYSTEM

A. Piping shall consist of two concentric, corrugated copper tubes, separated by a Teflon spacer. The space between the tubes shall be continuously evacuated by a pump to provide "dynamic vacuum". The outside shall be plastic coated for protection against the environment.

B. Manufacturer: Semiflex^{r} System as manufactured by Vacuum Barrier Corp.

C. The Semiflex^{r} system shall consist entirely of the Semiflex^{r} line with the addition of elbows, crosses, T-joints and fittings for connection to the source of supply and the points of outlet. These systems can be used for a simple point-to-point hood-up, or for a multi-branch network feeding from a single storage point.

D. The tubes shall be separated by a Teflon spacer of extremely low thermal conductivity. This spacer shall be in the form of a ribbon, twisted on its own axis

to minimize the number of physical contact points between tubes, and wrapped in helical configuration in the space between the copper tubes.

E. Thermal insulation between the two tubes shall be provided by a vacuum of at least 10^{-5} torr (0.01 microns), maintained by continuous pumping with a diffusion pumping system.

F. The system shall be designed to minimize heat leakage and also to minimize the volume of vaporized nitrogen.

G. The system shall have positive provision for thermal contraction and flexibility, provided by the corrugations in the line itself.

H. The sections of line shall be made as long as practical to minimize the total number of connections, while allowing for suitable handling.

I. As much as possible, corners in the system shall be achieved by bending the line in an arc not smaller than the minimum bend radii specified in manufacturer's literature.

J. The system shall be such that installation and maintenance cost are minimized.

K. Relief valves shall be installed between all shut off valves and in any other part of the system as required to prevent over pressure of the system due to the containment of a liquid that will vaporize due to heat loss.

L. Fittings:

1. All fitting shall be of dimensions commensurate with line specifications.

2. Bayonet connectors for quick connection of sub-assemblies shall have an inner liquid-carrying tube which is totally vacuum insulated. A small gap at the union shall form an internal gas seal which is externally sealed by a gasket at room temperature, thus forming a cryogenic seal. Dynamic vacuum shall be jumped around and through the bayonet by means of metal hose with high vacuum connectors to each vacuum port on mating bayonets.

3. Elbows, crosses, couplings and T-joints shall be constructed to be as totally vacuum insulated as the standard Semiflex^{r} line.

4. End terminations shall be suitable for the designated individual application. Each shall include an end with proper thermal isolation and, where appropriate, a pump-out port for the maintenance of vacuum

5. Valves shall be manual or pneumatically operated.

M.Fabrication:

1. The system shall be fabricated with as few connections and fittings as possible.

2. Wherever possible, corners shall be accomplished by bending the Semiflex^{r} line to a radius not less than that specified in manufacturer's installation instructions, rather than by the use of joints.

N. Testing:

1. Systems shall be helium leak tested with a mass spectrometer to a sensitivity of 1 X 10^{-9} std. c.c. of helium per second at each joint.

2. Completed systems shall be cold tested with liquid nitrogen for vacuum integrity before shipment at the factory.

O. Vacuum:

1. Continuous vacuum of 10^{-5} torr or better shall be maintained in the outer annulus of the Semiflex^{r} line.

2. Pumping shall be done with the VBC MICROtorr vacuum pumping station or equivalent.

3. The pumping station shall consist of an air-cooled oil diffusion pump, two-stage mechanical force pump, and cooling fan all mounted on a base.

4. The pumping station shall be attached to the Semiflex^{r} system with appropriate hoses and fittings.

5. Vacuum gage, and automatic vacuum monitors, shall be included in the vacuum system.

6. Performance specifications and other data for the vacuum pumping station are as follows:

Ultimate vacuum	10^{-6} torr range
Speed	11 liters/sec. @ 10^{-4} torr
Width	215 mm *(8.4 in.)*
Height	460 mm *(18.0 in.)*
Length	495 mm *(19.5 in.)*
Weight	26.8 kg *(59 lbs.)*

Electrical supply	120 VAC 60-cycle single phase,6 amps
Inlet connection	VF-25 Flange
Diffusion Pump Oil	DC-704
Mechanical Pump Oil	Alcatel 100

2.03 ALTERNATE PIPING SYSTEM

A. An alternate piping system of vacuum insulated pipe as manufactured by Minnesota Valley Engineering, Inc. may be proposed.

2.04 LIQUID NITROGEN STORAGE TANKS

A. Tanks shall have an alloy steel inner tank encased in an outer carbon steel vacuum shell with an insulation system and high vacuum system that is permanently sealed. Design Code: ASME Section VIII, Div. 1.

B. Tanks shall be suitable for liquid nitrogen storage and for use with vaporizers.

C. The system manufacturer shall coordinate selection of the tanks, vaporizers, final assemblies, pressure build circuits, connections, valves, regulators, relief devices, trim heaters, dewar fill stations, gages, and associated fittings to insure compatibility of components.

D. Flow rates for liquid and gas per schedule at ambient temperature.

E. The system manufacturer shall design bases for installation in Seismic Zone 4.

F. Manufacturers

1. Minnesota Valley Engineering

2. Process Engineering

3. Thermax

PART 3 - EXECUTION

3.01 INSPECTION

A. Examine areas and conditions under which laboratory supply systems and equipment are to be installed. Do not proceed with work until unsatisfactory conditions have been corrected in manner acceptable to Installer.

3.02 INSTALLATION OF BASIC IDENTIFICATION

A. General: Install mechanical identification in accordance with Division-15 Section 15190 "MECHANICAL IDENTIFICATION".

3.03 INSTALLATION OF LABORATORY SUPPLY SYSTEM

A. General: Install laboratory supply tubing in accordance with Division-15 Section 15050 "BASIC MECHANICAL MATERIALS AND METHODS".

B. Connect branch tubing to mains per manufacturer's instructions.

C. The tank systems and associated components shall be installed by factory authorized personnel.

3.04 INSTALLATION OF SPECIALTIES AND ACCESSORIES

A. Install tubing specialties, supports, anchors, valves, meters, gages, equipment connections, and accessories in accordance with manufacturer's instructions, details, and drawings.

3.05 ADJUSTING AND CLEANING

A. Adjusting and cleaning shall be in accordance with manufacturer's instructions.

END OF SECTION

SECTION 15510

HYDRONIC PIPING

PART 1 - GENERAL

1.01 RELATED DOCUMENTS

A. Drawings and general provisions of Contract, including General and Supplementary Conditions and Division 1 Specification sections, apply to work of this section as if repeated herein.

1.02 DESCRIPTION

A. This section includes piping systems for *heating water, chilled water condenser water,heat recovery fluid, make-up water for these systems, blow-down drain lines, and condensate drain piping.* Piping materials specified in this section include pipe and fittings.

B. Codes and Standards:

1. ASME Compliance: Fabricate and install hydronic piping in accordance with ASME B31.9 "Building Services Piping" or ASME B31.1 "Power Piping", as applicable.

1.03 SUBMITTALS

A. Product Data: Submit manufacturer's technical product data and installation instructions for piping materials and products.

B. Record Drawings: At project closeout, submit record drawings of installed piping and piping products, in accordance with requirements of Division 1.

PART 2 - PRODUCTS

2.01 MATERIALS AND PRODUCTS

A. Provide piping materials and factory-fabricated piping products of sizes, types, pressure ratings, temperature ratings, and capacities as indicated. Where not indicated, provide proper selection to comply with installation requirements. Provide sizes and types matching piping and equipment connections; provide fittings and materials which match pipe materials used in hydronic piping systems.

2.02 IDENTIFICATION

A. Provide identification complying with Division-15 Section 15190 "MECHANICAL IDENTIFICATION".

2.03 PIPES AND PIPE FITTINGS

A. Provide pipes and pipe fittings in accordance with the following listing:

B. Hydronic Pipe and Fittings:

1. Pipe Size 50 mm *(2")* and Smaller: Black steel pipe; ASTM A 120; Schedule 40; cast-iron threaded fittings; Class 125; ANSI B16.4.

1. Pipe Sizes 100 mm (4") and Smaller: Copper tubing. Conform to ASTM B88, Type L, hard temper, copper tube; ANSI B16.22 streamlined pattern wrought-copper fittings, with soldered joints using 95-5 tin-antimony solder and procedure specified in ANSI B9.1. Lead solders are not permitted.

2. Pipe Size 65 thru 150 mm *(2-1/2" thru 6")*: Black steel pipe; ASTM A 120; Schedule 40; ANSI B16.9, wrought-steel buttwelding fittings, welded joints.

2. Pipe Size 115 thru 150 mm (4-1/2" thru 6":) Black steel pipe; ASTM A 120; Schedule 40; ANSI B16.9, wrought-steel buttwelding fittings, welded joints.

3. Pipe Size 200 mm *(8")* and Larger: Black steel pipe; ASTM A53B; Schedule 30; ANSI B16.9, wrought-steel buttwelding fittings, welded joints.

C. Steel Flanges: 1035 kpa *(150 lb.)* forged steel, ANSI B16.5 (weld neck).

D. Cast Iron Threaded Flanges: Class 125 ANSI B16.1.

E. Unions: ANSI B16.39 malleable-iron, Class 150, hexagonal stock, with ball-and-socket joints, metal-to-metal bronze seating surfaces; female threaded ends. Threads shall conform to ANSI B1.20.1.

F. Dielectric Unions: Threaded or soldered end connections for the pipe materials in which installed; constructed to isolate dissimilar metals, prevent galvanic action, and prevent corrosion.

G. Flexible Connectors: Stainless steel bellows with woven flexible bronze wire reinforcing protective jacket; minimum 1035 kpa *(150 psig)* working pressure, maximum 121 deg. C *(250 degrees F)* operating temperature. Connectors shall have flanged or threaded end connections to match equipment connected; and shall be capable of 20 mm *(3/4 inch)* misalignment.

H. Grooved Mechanical Fittings and Couplings:

1. Grooved Mechanical Fittings: ASTM A 536, Grade 65-45-12 Ductile Iron; ASTM A 47 Grade 32510 Malleable Iron; ASTM A 53, Type F, or Types E or S, Grade B fabricated steel; or ASTM A 106, Grade B steel fittings with grooves or shoulders designed to accept grooved end couplings.

2. Grooved Mechanical Couplings: Consist of ductile or malleable iron housing, a synthetic rubber gasket of a central cavity pressure-responsive design; with nuts, bolts, locking pin, locking toggle, or lugs to secure grooved pipe and fittings.

3. Restrictions on Grooved Mechanical Couplings and Fittings:

   a. Reducing couplings shall not be used.

   b. Reducing fittings with abrupt reducing shall not be used.

   c. Fittings shall be long sweep pattern.

2.04 JOINING MATERIALS

A. Welding Materials: Comply with Section II, Part C. ASME Boiler and Pressure Vessel Code for welding materials appropriate for the wall thickness and chemical analysis of the pipe being welded.

B. Gasket Material: Thickness, material, and type suitable for fluid to be handled and design temperatures and pressures.

C. Solder Filler Metals: ASTM B32, 95-5 Tin -Antimony.

2.05 VALVES

A. Valves (i.e., gate, globe, check, ball and butterfly valves) are specified in Division 15 Section 15100 "VALVES."

2.06 HYDRONIC SPECIALTIES

A. Manual Air Vent: Bronze body and nonferrous internal parts; 1035 kpa *(150 psig)* working pressure, 107 deg. C *(225 deg. F)* operating temperature; manually operated with screwdriver or thumbscrew; and having 3.1mm*(1/8 inch)* discharge connection and 15 mm *(1/2 inch)* inlet connection.

B. Automatic Air Vent: Designed to vent automatically with float principle; Bronze body and nonferrous internal parts; 1035 kpa *(150 psig)* working pressure, 115 deg. C *(240deg. F)* operating temperature; manually operated with screwdriver or thumbscrew; and having 6.3 mm *(1/4 inch)* discharge connection and 15 mm *(1/2 inch)* inlet connection.

C. Y-Pattern Strainer: 865 kpa *(125 psig)* working pressure cast iron body; ASTM A126, Class B; flanged ends for 65 mm *(2 1/2")* and larger, threaded ends for 50 mm *(2")* and smaller, bolted cover, perforated type 304 stainless steel basket, and bottom drain connection.

C. Y-Pattern Strainer: 865kpa (125 psig) working pressure bronze body, threaded ends for 50mm (2")and smaller, 20 mesh stainless steel screen, solid retainer cap with straight threads and gasket, Watts Model No. 777 or equal.

D. Pump Discharge Valves (Triple-duty Valves): 1210 kpa (175 psig) working pressure, 148 deg. C (300 deg F) maximum operating temperature, cast-iron body, bronze disc and seat, stainless steel stem and spring, and "Teflon" packing. Valves shall have flanged connections and straight or angle pattern as indicated. Features shall include non-slam check valve with spring-loaded weighted disc, and calibrated adjustment feature to permit regulation of pump discharge flow and shutoff.

1. Manufacturers: Amtrol, Inc.; Armstrong Pumps, Inc.; Bell & Gossett; Taco, Inc.

2.07 SUPPORTS AND ANCHORS

A. Provide supports and anchors complying with Division-15 Section 15050 "BASIC MECHANICAL MATERIALS AND METHODS" section 15140 "SUPPORTS AND ANCHORS".

PART 3 - EXECUTION

3.01 INSPECTION

A. Examine areas and conditions under which hydronic piping materials and products are to be installed. Do not proceed with work until unsatisfactory conditions have been corrected.

3.02 INSTALLATION OF HYDRONIC PIPING

A. Install piping in accordance with Division-15 Section 15050 "BASIC MECHANICAL MATERIALS AND METHODS".

B. Install exposed piping at right angles or parallel to building walls. Diagonal runs are not permitted, unless expressly indicated.

C. Conceal all pipe installations in walls, pipe chases, utility spaces, above ceilings, below grade or floors, unless indicated to be exposed to view.

D. Install piping tight to slabs, beams, joists, columns, walls and other permanent elements of the building when not indicated otherwise. Provide space to permit insulation applications, with 25 mm *(1")* clearance outside the insulation. Allow sufficient space above removable ceiling panels to allow for panel removal.

E. Locate groups of pipes parallel to each other, spaced to permit applying insulation and servicing of valves.

F. Install drains at low points in mains, risers, and branch lines consisting of a tee fitting, 20 mm *(3/4")* ball valve and short 3/4" threaded nipple and cap.

G. Exterior Wall Penetrations: Seal pipe penetrations through exterior walls usingsleeves and mechanical sleeve seals. Pipe sleeves smaller than 150 mm *(6 inches)* shall be steel; pipe sleeves 150 mm *(6 inches)* and larger shall be sheet metal.

H. Fire Barrier Penetrations: Where pipes pass through fire rated walls, partitions, ceilings and floors, maintain the fire rated integrity.

I. Install piping at a uniform grade of 25 mm in 12 m *(1 inch in 40 feet)* upward in the direction of flow.

J. Make reductions in pipe sizes using eccentric reducer fitting installed with the level side up.

K. Install branch connections to mains using Tee fittings in main with take-off out the bottom of the main, except for up-feed risers which shall have take-off out the top of the main line.

L. Install unions in pipes 50 mm *(2 inches)* and smaller, adjacent to each valve, at final connections each piece of equipment, and elsewhere as indicated. Unions are not required on flanged devices.

M. Install dielectric unions to join dissimilar metals.

N. Install flanges on valves, apparatus and equipment having 65 mm *(2-1/2 inch)* and larger connections.

O. Install flexible connectors at inlet and discharge connections to pumps (except inline pumps) and other vibration producing equipment.

P. Install strainers on the supply side of each control valve, pressure reducing valve, pressure regulating valve, solenoid valve, inline pump, and elsewhere as indicated. Install nipple and ball valve in blow down connection of strainers 50 mm *(2 inches)* and larger.

Q. Anchor piping to ensure proper direction of expansion and contraction. Expansion loops and joints are indicated on the drawings.

3.03 HANGERS AND SUPPORTS

A. General: Hanger, supports and anchors devices are specified in Division 15 Section "SUPPORTS AND ANCHORS."

3.04 PIPE JOINT CONSTRUCTION

A. Threaded Joints: Conform to ANSI B1.20.1, tapered pipe threads for field cut threads. Join pipe fittings and valves as follows:

1. Note the internal length of threads in fittings or valve ends and proximity of internal seat or wall to determine how far pipe should be threaded into joint.

2. Align threads at point of assembly.

3. Apply appropriate tape or thread compound to the external pipe threads (except where dry seal threading is specified).

4. Assemble joint wrench tight. Wrench on valve shall be on the valve end into which the pipe is being threaded.

a. Damaged Threads: Do not use pipe with threads which are corroded or damaged. If a weld opens during cutting or threading operations, that portion of pipe shall not be used.

B. Welded Joints: Comply with the requirement in ASME Code B31.9-"Building Services Piping."

C. Flanged Joints: Align flanges surfaces parallel. Assemble joints by sequencing bolt tightening to make initial contact of flanges and gaskets as flat and parallel as possible. Use suitable lubricants on bolt threads. Tighten bolts gradually and uniformly using torque wrench. Unlike flanges are not allowed.

D. Solder Joints: Comply with procedures contained in the AWS "Soldering Manual".

3.05 VALVE APPLICATIONS

A. General Duty Valve Applications: The drawings indicate valve types to be used. Where specific valve types are not indicated, the following requirements apply:

1. Install shut-off duty valves at each branch connection to supply mains, at supply connection each piece of equipment and elsewhere as indicated.

2. Install throttling duty valves at each branch connection to return mains, at return connections to each piece of equipment, elsewhere as indicated.

B. Install calibrated plug valves on the outlet of each heating or cooling element and elsewhere as required to facilitate system balancing.

C. Install drain valves at low points in mains, risers, branch lines, and elsewhere as required for system drainage.

3.06 FIELD QUALITY CONTROL

A. Preparation for testing: Prepare hydronic piping in accordance with ASME B31.9 and as follows:

1. Leave joints including welds and unpainted pipe uninsulated and exposed for examination during the test.

2. Provide temporary restraints for expansion joints which cannot sustain the reactions due to test pressure. If temporary restraints are not practical, isolate expansion joints from testing.

3. Flush system with clean water. Clean strainers.

4. Isolate equipment that is not to be subjected to the test pressure from the piping. If a valve is used to isolate the equipment, its closure shall be capable of sealing against the test pressure without damage to the valve. Flanged joints at which blinds are inserted to isolate equipment need not be tested.

5. Install relief valve set at a pressure no more than 1/3 higher than the test pressure, to protect against damage by expansion of liquid or other source of overpressure during the test.

B. Testing: Test hydronic piping as follows:

1. Use ambient temperature water as the testing medium.

2. Use vents installed at high points in the system to release trapped air while filling the system. Use drains installed at low points for complete removal of that liquid.

3. Examine system to see that equipment and parts that cannot withstand test pressures are properly isolated. Examine test equipment to ensure that it is tight and that low pressure filling lines are disconnected.

4. Subject piping system to a hydrostatic test pressure which at every point in the system is not less than 1.5 times the design pressure. The test pressure shall not exceed the maximum pressure for any vessel, pump, valve, or other component in the system under test. Make a check to verify that the stress due to pressure at the bottom of vertical runs does not exceed either 90 percent of specified minimum yield strength, or 1.7 times the "SE" value in Appendix A of ASME B31.9, Code For Pressure Piping, Building Services Piping.

5. Use bubble test for joint leaks. After the hydrostatic test pressure has been applied for at least 10 minutes, examine piping, joints and connections for leakage. Eliminate leaks by tightening, repairing, or replacing components as appropriate, and repeat hydrostatic test until there are no leaks.

3.07 ADJUSTING AND CLEANING

A. Clean and flush hydronic piping systems. Remove, clean and replace strainer screens. After cleaning and flushing hydronic piping system, but before balancing, remove disposable fine mesh strainers in pump suction diffusers.

B. Mark calibrated name plates of pump discharge valves after hydronic system balancing has been completed, to permanently indicate final balanced position.

C. Chemical Treatment: Provide a water analysis prepared by the chemical treatment supplier to determine the type and level of chemicals required for prevention of scale and corrosion. Perform initial treatment after completion of system testing.

3.08 COMMISSIONING

A. Fill system and perform initial chemical treatment.

B. Check expansion tanks to determine that they are not air bound and that the system is completely full of water.

C. Before operating the system, perform these steps:

1. Open valves to full open position. Close coil bypass valves.

2. Remove and clean strainers.

3. Check pump for proper direction and correct improper wiring.

4. Set automatic fill valves for required system pressure.

5. Check air vents at high points of systems and determine if all are installed and operating freely (automatic type) or to bleed air completely (manual type).

6. Lubricate motors and bearings.

D. Heat recovery system shall be filled (after testing) with Dow Chemical, SR-1 heat transfer fluid.

END OF SECTION

SECTION 15512

UNDERGROUND PIPING SYSTEMS
(PRE-INSULATED)

PART 1 - GENERAL

1.01 RELATED DOCUMENTS

A. Drawings and general provisions of the Contract, including General and Supplementary Conditions, and Division 1 Specification Sections, apply to the work specified in this section as if repeated herein.

B. Requirements of Basic Mechanical Requirements govern the work specified in this section.

1.02 DESCRIPTION

A. The extent of the underground piping systems is indicated by the drawings, and by the requirements of this section. Provide all materials, equipment, tools, rigging, drayage, etc., and perform all labor required to install systems complete as indicated herein. The systems shall be tested, adjusted and ready for operation by Sandia personnel.

1.03 SUBMITTALS

A. Submit manufacturer's data on pre-insulated piping system, showing complete descriptive and performance data.

B. Submit dimensioned drawings of pre-insulated piping system showing installation details, joining methods, anchoring, expansion loops, thrust blocking, etc., required for a complete and satisfactory piping system.

C. Factory insulated system shall essentially duplicate systems that have been in satisfactory operation at least two (2) years prior to bid opening and the Contractor shall provide documented certification to that effect from the manufacturer, at time of submittal.

PART 2 - PRODUCTS

2.01 GENERAL

A. Chilled water supply and return, heating water supply and return, and instrument air piping shall be installed in Rickwil, or equal. Galvanized pre-fabricated pre-insulated pipe conduit with all necessary fittings, conduit ends, anchors,

expansion compensation, and conduit accessories required for complete underground piping systems.

2.02 CHILLED WATER SUPPLY AND RETURN CONDUIT

A. Conduit: 3.51mm *(10 ga.)* hot dipped galvanized steel with enlarged elbows for expansion compensation.

B. Carrier Pipes: Two carbon steel, Schedule 40, ASTM A120, with buttweld fittings per ASTM A234.

C. Instrument Air Pipe: 20 mm *(3/4")* carbon steel, Schedule 40, ASTM A120 with 1035 kpa *(150 lb)* malleable iron fittings and without insulation.

D. Support Guides: Insulated to permit expansion.

E. Insulation: 40 mm *(1-1/2")* thick fiberglass with ASJ all service jacket.

F. End Seal and Gland: Per manufacturer's standard.

G. Leakplates and Anchors: Per manufacturer's standard.

H. Sizes and Arrangement: As shown on drawings.

2.03 HEATING WATER SUPPLY AND RETURN CONDUIT

A. Conduit: 3.51mm *(10 ga.)* hot dipped galvanized steel with enlarged elbows for expansion compensation.

B. Carrier Pipes: Two carbon steel Schedule 40 ASTM A120.

C. Pipe Fittings: Buttweld ASTM A234.

D. Support Guides: Insulated to permit expansion.

E. Insulation: 25 mm *(1")* thick fiberglass with ASJ all service jacket.

F. End Seal and Gland: Per manufacturer's standard.

G. Leakplates and Anchors: Per manufacturer's standard.

H. Sizes and Arrangement: As shown in drawings.

2.04 CONDUIT AIR TEST

A. All field welds at conduit closures shall be tested for leaks before applying coating and blanket. During test, all field welds shall be checked with soap suds, and rewelded if necessary until air tight at 105 kpa *(15 lbs.)* pressure.

B. The contractor shall furnish all necessary equipment and labor to perform the air test, including air compressor, gages, conduit caps, temporary pipe and connections, etc. and complete the test to the satisfaction of Sandia Delegated Representative.

2.05 CATHODIC PROTECTION

A. Provide cathodic protection with magnesium anodes for each buried conduit system.

B. Provide 8 kg *(17 lbs)* bare weight anodes at each end of each conduit run.

C. Provide one test station for each conduit system.

1. Test stations shall consist of a curb box with cover and 4 mm^2 *(#12)* test loads for stations flush with grade or a conduit with cover, conduit and 4mm^2 *(#12)* test wires for above grade installation.

2. Provide a test meter to Sandia.

3. Provide three copies of test results to Sandia at completion of project.

PART 3 - EXECUTION

3.01 INSTALLATION

A. General: Comply with the requirements of Section 15050 for installation of basic piping materials. Install piping products in accordance with manufacturer's written instructions and in accordance with recognized industry practices.

B. Contractor's Responsibility: For all direct buried preinsulated systems, the Contractor shall obtain the services of a trained representative of the manufacturer to ensure that the system is installed in accordance with the manufacturer's recommendations and the plans and specifications. The manufacturer's representative shall be a person who is regularly engaged on a continuing basis in rendering such services for the manufacturer, and shall be certified in writing by the manufacturer to be technically qualified and experienced in the installation of the manufacturer's system and shall be authorized by him to supervise the installation. The Contractor shall obtain from the manufacturer's representative a written report that shall state whether or not the condition and quality of the

materials used and the installation of the system are in accordance with the plans, specifications, and with the published standards of the manufacturer, and are satisfactory in all respects. This report shall be signed by the manufacturer's representative. If anything connected with the installation is unsatisfactory, the report shall state what corrective action has been taken, or shall contain the manufacturer's recommendations for corrective action. The report shall cover any condition which could result in any unsatisfactory installation. The representative shall take prompt action to return to the factory all damaged or defective material, subject to rejection, and shall order prompt replacement of such material. The manufacturer's representative shall be present and shall perform his duties when any work is in progress from the initial delivery of material through final tests after backfilling, except when the only work in progress is trenching or making of carrier pipe joints. Upon completion of the work and before final acceptance, the Contractor shall deliver to the Sandia Delegated Representative a statement signed by a principal officer of the contracting firm, stating that the installation is satisfactory and in accordance with the plans, specifications and the manufacturer's standards.

C. Trenching and Backfilling: Trench bottoms for underground piping systems shall be smooth and free of sharp objects, stones and debris which could puncture the casing. The trench shall be over-excavated and stabilized by using 100 to 150 mm *(4 to 6 inches)* sand, fine dirt or similar material. Partial backfilling is required immediately after installation of the pipe. Selected backfill shall be tamped in not more than 150 mm *(6-inch)* layers under and around the conduit to a height of not less than 150 mm *(six inches (6"))* above the top of the casing. Joints and fittings during this process shall be left exposed for visual inspection during field testing.

D. Anchors: Anchor design shall be in accordance with the published data of the manufacturer. In all cases, the design shall be such that water penetration, condensation or vapor transmission will not wet the insulation of the preinsulated system.

3.02 PIPE TESTING AND CLEANING

A. Piping Test: Piping shall be hydraulically tested before joint and fitting insulation is installed. System or section to be tested shall be filled with water and brought up to 520 kpa *(75 psi)* for a period of 6 hours. Any leakage shall be located and repaired and test repeated until proved tight.

B. Cleaning: After system is complete, the Contractor shall add tri-sodium phosphate in an aqueous solution to the system at the proportion of 0.45 kg per 189 l *(one pound per fifty gallons)* of water in the system. After the system is filled with the solution, the system shall be brought up to 60 deg. C *(140 F)* and allowed to circulate for two hours. The system shall then be drained completely and refilled with fresh water. The Sandia Delegated Representative shall be given notice 24 hours in advance of this cleaning operation and will be present to observe the

cleaning operation, and, if the Sandia Delegated Representative deems it necessary, the cleaning operation shall be repeated. After the system has been cleaned, it shall be tested by litmus paper and shall be left on the slightly alkaline side (pH=7.5). If the system is found to be still on the acid side, the cleaning by the use of tri-sodium phosphate shall be repeated.

END OF SECTION

SECTION 15515

HYDRONIC SPECIALTIES

PART 1 - GENERAL

1.01 RELATED DOCUMENTS

A. Drawings and general provisions of Contract, including General and Supplementary Conditions and Division 1 Specification sections, apply to work of this section as if repeated herein.

1.02 DESCRIPTION

A. Extent of hydronic specialties required by this section is indicated on drawings and/or specified in other Division 15 sections.

1.03 QUALITY ASSURANCE

A. Qualifications for Welding Processes and Operators: ASME "Boiler and Pressure Vessel Code," Section IX, "Welding and Brazing Qualification."

B. Regulatory Requirements: ASME Compliance: Fabricate and stamp air separators and compression tanks to comply with ASME Boiler and Pressure Vessel Code, Section VIII, Division 1.

C. Single Source Responsibility: Comply with requirements specified in Division-15 Section 15010 "BASIC MECHANICAL REQUIREMENTS," under "Product Options."

1.04 SUBMITTALS

A. Submit manufacturer's technical product data and installation instructions for each type of hydronic specialty. Submit schedule indicating manufacturer's figure number, size, location, rated capacities, and features for each required specialty.

B. Submit maintenance data and spare parts lists for each type of specialty. Include this data, product data, and shop drawings in maintenance manual, in accordance with requirements of Section 15010.

PART 2 - PRODUCTS

2.01 GENERAL

A. Provide factory-fabricated hydronic specialties recommended by manufacturer for use in service indicated. Provide specialties of types, capacities, and pressure ratings indicated for each service, or if not indicated, provide proper selection as determined to comply with installation requirements. Provide sizes as indicated, and connections, which properly mate with pipe, tube, and equipment connections.

2.02 HYDRONIC SPECIALTIES

A. Manual Air Vent: Bronze body and nonferrous internal parts; 1035 kpa *(150 psig)* working pressure, 107 deg. C *(225 deg. F)* operating temperature; manually operated with screwdriver or thumbscrew; and having 3.1mm *(1/8 inch)* discharge connection and 15 mm *(1/2 inch)* inlet connection.

1. Manufacturers: Bell & Gossett, Taco, Armstrong, Spirex Sarco.

B. Automatic Air Vent: Designed to vent automatically with float principle; Bronze body and nonferrous internal parts; 1035 kpa *(150 psig)* working pressure, 115 deg. C *(240deg. F)* operating temperature; manually operated with screwdriver or thumbscrew; and having 6.3 mm *(1/4 inch)* discharge connection and 15 mm *(1/2 inch)* inlet connection.

1. Manufacturers: Bell & Gossett, Taco, Armstrong, Spirex Sarco.

C. Diaphragm-Type Compression Tanks: Size and number as indicated; construct of welded carbon steel for 865 kpa *(125 psig)* working pressure, 190 deg. C *(375 deg F)* maximum operating temperature. Separate air charge from system water to maintain design expansion capacity, by means of a flexible diaphragm securely sealed into tank. Provide taps for pressure gauge and air charging fitting, and drain fitting. Support vertical tanks with steel legs or base; support horizontal tanks with steel saddles. Tank, with taps and supports, shall be constructed, tested, and labeled in accordance with ASME Pressure Vessel Code, Section VIII, Division 1.

1. Manufacturers: Amtrol, Inc.; Armstrong Pumps, Inc.; Bell & Gossett; Taco

D. Pump Suction Diffusers: Cast-iron body, with threaded connections for 50 mm *(2 inch)* and smaller, flanged connections for 65 mm *(2-1/2 inch)* and larger; 1210 kpa *(175 psig)* working pressure, 148 deg. C *(300 deg F)* maximum operating temperature; and complete with inlet vanes with length 2-1/2 times pump suction diameter or greater, cylinder strainer with 4.8 mm *(3/16-inch)* diameter openings with total free area equal to or greater than 5 times cross-sectional area of pump suction, designed to withstand pressure differential equal to pump shutoff head, disposable fine mesh strainer to fit over cylinder strainer, permanent magnet, located in flow stream, removable for cleaning, adjustable foot support, designed

to carry weight of suction piping and blowdown tapping in bottom; gauge tapping in side.

1. Manufacturers: Amtrol, Inc.; Armstrong Pumps, Inc.; Bell & Gossett; Taco, Inc.

E. Pump Discharge Valves (Triple-duty Valves): 1210 kpa *(175 psig)* working pressure, 148 deg. C *(300 deg F)* maximum operating temperature, cast-iron body, bronze disc and seat, stainless steel stem and spring, and "Teflon" packing. Valves shall have flanged connections and straight or angle pattern as indicated. Features shall include non-slam check valve with spring-loaded weighted disc, and calibrated adjustment feature to permit regulation of pump discharge flow and shutoff.

1. Manufacturers: Amtrol, Inc.; Armstrong Pumps, Inc.; Bell & Gossett; Taco, Inc.

F. Chemical Feeder: Bypass shot-type chemical feeders of 19 l *(5 gallon)* capacity, welded steel construction; 865 kpa *(125 psig)* working pressure; complete with fill funnel and inlet, outlet, and drain valves.

1. Manufacturers: Wingert, Culligan, Vulcan Lab., York, Mogul.

G. Strainers

1. Y-Pattern Strainer: 865 kpa *(125 psig)* working pressure cast iron body; ASTM A126, Class B; flanged ends for 65 mm *(2 1/2")* and larger, threaded ends for 50 mm *(2")* and smaller, bolted cover, perforated type 304 stainless steel basket, and bottom drain connection.

2. Manufacturers: Mueller, Armstrong, Crane, Sarco, Hayward.

1. Y-Pattern Strainer: 865kpa (125 psig) working pressure bronze body, threaded ends for 50mm (2")and smaller, 20 mesh stainless steel screen, solid retainer cap with straight threads and gasket, Watts Model No. 777 or equal.

H. Air Separators: In-line or tangential type as indicated. In-line shall be 865 kpa *(125 psig)* working pressure and 148 deg, C *(300 F)* maximum operating temperature. Tangential type shall be ASME Code constructed for 865 kpa *(125 psig)* working pressure.

1. Manufacturers: Amtrol, Armstrong, Bell & Gossett, Taco.

I. Cold Water Make-Up: Pressure reducing valve, set to control downstream pressure. Make-up valve assembly shall have strainer and backflow preventer,

and shall be adjustable in the line for downstream pressures 55 kpa to 210 kpa *(8 psig to 30 psig)*. Install quick-fill bypass around PRV to expedite initial fill.

1. Manufacturers: Amtrol, Armstrong, Bell & Gossett, Taco.

J. Safety Relief Valve: System shall be protected by an ASME diaphragm- operated relief valve, set at 105 kpa *(15 psig)* above normal system pressure, unless similar valve is furnished as integral part of boiler or converter, and shall have a differential between full open and dead shutoff of not more than 30 kpa *(4 psig)*. Discharge from valve shall be piped to open floor drain and supported to prevent stress from being transferred to the valve body.

1. Manufacturers: Amtrol, Bell & Gossett, Sarco.

PART 3 - EXECUTION

3.01 HYDRONIC SPECIALTIES INSTALLATION

A. Install manual air vents at high points in the system, at heat transfer coils, and elsewhere as required for system air venting.

B. Install automatic air vents at high points in the system where indicated and required for system operation.

C. Install inline air separators where indicated. Run piping to compression tank with 6.3 mm per 0.3 m *(1/4 inch per foot)* (2 percent) upward slope towards tank. Install drain valve on units 50mm *(2 inch)* and larger.

D. Install combination separator/strainer where indicated. Run piping to compression tank with 6.3 mm per 0.3 m *(1/4 inch per foot)* (2 percent) upward slope towards tank. Install blowdown piping with gate valve; extend to nearest drain.

E. Install pump suction diffusers on pump suction inlet, adjust foot support to carry weight of suction piping. Install nipple and ball valve in blowdown connection.

F. Install pump discharge valves in horizontal or vertical position with stem in upward position. Allow clearance above stem for check mechanism removal.

G. Install shot-type chemical feeders in each hydronic system where indicated; in upright position with top of funnel not more than 1220 mm *(48 inches)* above floor. Install feeder in bypass line, off main using globe valves on each side of feeder and in the main between bypass connections. Pipe drain, with ball valve, to nearest equipment drain.

H. Install diaphragm-type compression tanks on floor as indicated. Vent and purge air from hydronic system, charge tank with proper air charge to suit system design requirements.

I. Install strainers on the supply side of each control valve, pressure reducing valve, pressure regulating valve, solenoid valve, inline pump, and elsewhere as indicated. Install nipple and ball valve in blowdown connection of strainers 50 mm *(2 inch)* and larger.

J. Install safety relief valves on hot water generators, and elsewhere as required by ASME Boiler and Pressure Vessel Code. Pipe discharge to floor without valves. Comply with ASME Boiler and Pressure Vessel Code, Section VIII, Division 1, for installation requirements.

K. Chemical Treatment: Provide a water analysis prepared by the chemical treatment supplier to determine the type and level of chemicals required for prevention of scale and corrosion. Perform initial treatment after completion of system testing.

3.02 FIELD QUALITY CONTROL

A. Preparation for testing: Prepare hydronic piping specialties for testing in accordance with ASME B 31.9.

1. Flush system with clean water. Clean strainers.

2. Isolate equipment that is not to be subjected to the test pressure from the piping. If a valve is used to isolate the equipment, its closure shall be capable of sealing against the test pressure without damage to the valve. Flanged joints at which blinds are inserted to isolate equipment need not be tested.

END OF SECTION

SECTION 15516

COOLING TOWER SEPARATOR

PART 1 - GENERAL

1.01 RELATED DOCUMENTS

A. Drawings and general provisions of Contract, including General and Supplementary Conditions and Division 1 Specification sections, apply to work of this section as if repeated herein.

1.02 DESCRIPTION

A. Provide separator as shown on the drawings, and in accordance with the specifications. The strainers will be required to remove solids from cooling tower water with a pressure drop no greater than 3 psig clean, at scheduled flow.

B. Submit manufacturer's catalog data, drawings and installation instructions.

PART 2 - PRODUCTS

2.01 SEPARATOR

A. The separator shall be capable of removing solids 50 microns/325 mesh in size and heavier than 1.20 specific gravity.

B. The separator shall accommodate flow rates from 69.4 to 138.8 l/s *(1100 to 2200 GPM)*.

C. The separator shall be made of not less than 3.51 mm *(10 gauge)* carbon steel and be rated at 1035 kpa *(150 psi).*

D. The separator shall have an open chamber inlet without slots to insure unobstructed flow.

E. The separator shall be hydrostatically tested at 1550 kpa *(225 psi).*

F. The separator shall have a five year warranty.

G. The separator system shall be manufactured by Griswold Controls, 2803 Barranca, Irvine, California 92714.

H. Capacity: As scheduled.

I. Dimensions: As scheduled.

PART 3 - EXECUTION

3.01 INSTALLATION

A. Install in accordance with manufacturer's instructions and accepted practices of the industry.

END OF SECTION

SECTION 15534

TOTAL FLOOD CLEAN AGENT FIRE SUPRESSION SYSTEM

PART 1 GENERAL

1.01 SCOPE OF WORK

A. This specification outlines the requirements for a "Total Flood" HFC-227ea Clean Agent Fire Suppression System with automatic detection and control. The work described in this specification includes all engineering, labor, materials, equipment and services necessary, and required, to complete and test the suppression system.

B. The entire building fire alarm system shall include: Total Flood Clean Agent Fire Suppression System (15534), Fire Alarm and Detection System (16710), and the High Sensitivity Smoke Detection System, HSSD (16710) and will all be coordinated to operate as described in their respective sections. Coordinate with the fire protection wet sprinkler contractor and specification 15330 for related requirements.

1.02 APPLICABLE STANDARDS AND PUBLICATIONS:

A. The design, equipment, installation, testing and maintenance of the Clean Agent Suppression System shall be in accordance with the applicable requirements set forth in the latest edition of the following codes and standards:

1. NFPA No. 2001- Clean Agent Fire Extinguishing Systems
2. NFPA No. 12A - Halon 1301 Fire Extinguishing Systems
3. NFPA No. 70 - National Electrical Code
4. NFPA No. 72 - Standard For Protective Signaling
5. Factory Mutual Approval Guide
6. UL Listings

B. The standards listed, as well as all other applicable codes and standards, shall be used as "minimum" design standards. Also to be considered are the requirements of the "Authority Having Jurisdiction" and good engineering practices.

1.03 REQUIREMENTS:

A. The Suppression System installation shall be made in accordance with the drawings, specifications and applicable standards. Should a conflict occur between the drawings and specifications, the specifications shall prevail. See Specification Section 16710 for high sensitivity smoke detection system requirements.

1.04 EXCLUSIONS:

A. The work listed below shall be provided by others, or under other sections of this specification:-

B. 120 VAC or 208/220 VAC power supply to the system control panel.

C. Interlock wiring and conduit for shutdown of HVAC, dampers and/or electric power supplies, relays or shunt trip breakers.

D. Connection to local/remote fire alarm systems, listed central alarm station(s) or sprinkler preaction/deluge valve actuation.

1.05 QUALITY ASSURANCE:

A. Manufacturer

1. The manufacturer of the Suppression System hardware and detection components shall have a minimum of 10 years experience in the design and manufacture of similar types of suppression systems and who refer to similar installations providing satisfactory service.

2. The name of the manufacturer, part numbers and serial numbers shall appear on all major components.

3. All devices, components and equipment shall be the products of the same manufacturer.

4. All devices, components and equipment shall be new, standard products of the manufacturer's latest design and suitable to perform the functions intended.

5. All devices and equipment shall be U.L listed and/or FM approved.

6. Locks for all cabinets shall be keyed alike.

B. Installer

1. The installing contractor shall be trained by the supplier to design, install, test and maintain Suppression Systems.

2. The installing contractor shall employ a NICET certified special hazard and fire alarm systems designer, level 2 or above, who will be responsible for this project.

3. The installing contractor shall be an experienced firm which specializes in the installation of automatic Clean Agent, or similar, fire suppression systems in strict accordance with all applicable standards.

4. The installing contractor must have a minimum of ten (10) years experience in the design, installation and testing of Clean Agent, or similar, fire suppression systems. A list of systems of a similar nature and scope shall be provided on request.

5. The installing contractor shall maintain, or have access to, a Clean Agent recharging station. The installing contractor shall provide proof of his ability to recharge this Clean Agent system within 24 hours after a discharge. Include the amount of bulk agent storage available.

6. The installing contractor shall be an authorized stocking distributor of the Clean Agent system equipment so that immediate replacement parts are available from inventory.

7. The installing contractor shall show proof of emergency service available on a twenty-four hour, seven-day-a-week basis.

1.06 SUBMITTALS

A. The installing contractor shall submit the following design information and drawings for approval prior to starting work on this project:

B. Field installation layout drawings having a scale of not less than 1/8" = 1'-0" or 1:1000m detailing the location of all agent storage tanks, pipe runs including pipe sizes and lengths, control panel(s), detectors, manual pull stations, abort stations, audible and visual alarms, etc.

C. Auxiliary details and information such as maintenance panels, door holders, special sealing requirements and equipment shutdowns.

D. Separate layouts, or drawings, shall be provided for each level, (i.e.; room, underfloor, and above ceiling) and for mechanical and electrical work.

E. A separate layout or drawing shall show isometric details of agent storage containers, mounting details and proposed pipe runs and sizes.

F. Electrical layout drawings shall show the location of all devices and include point-to-point conduit runs and a description of the method(s) used for detector mounting.

G. Provide an internal control panel-wiring diagram that shall include power supply requirements and field wiring termination points.

H. Graphic Annunciator wiring schematics and dimensioned display panel illustration shall be provided. (Optional device)

I. Complete hydraulic flow calculations, from a UL listed computer program, shall be provided for all engineered Clean Agent systems. Calculation sheet(s) must include the manufacturers name and UL listing number for verification. The individual sections of pipe and each fitting to be used, as shown on the isometrics, must be identified and included in the calculation. Total agent discharge time must be shown and detailed by zone.

J. Provide calculations for the battery stand-by power supply taking into consideration the power requirements of all alarms, initiating devices and auxiliary components under full load conditions.

K. A complete sequence of operation shall be submitted detailing all alarm devices, shutdown functions, remote signaling, damper operation, time delay and agent discharge for each zone or system.

L. Submit drawings, calculations and system component data sheets for approval to the local Fire Prevention Agency, owners Insurance Underwriter and all other Authorities Having Jurisdiction before starting installation. Submit approved plans to the Architect/Engineer for record.

PART 2 AGENT REQUIREMENTS

2.01 SYSTEM DESCRIPTION AND OPERATION

A. The system shall be a total flood FM-200 Suppression System.

B. The system shall provide a FM-200 minimum design concentration of 7 %, by volume, in all areas and/or protected spaces, at the minimum anticipated temperature within the protected area. System design shall not exceed the NOAEL value of 9.0%, adjusted for maximum space temperature anticipated, unless provisions for room evacuation, before agent release, are provided.

C. The system shall be complete in all ways. It shall include all mechanical and electrical installation, all detection and control equipment, agent storage containers, FM-200 agent, discharge nozzles, pipe and fittings, manual release and abort stations, audible and visual alarm devices, auxiliary devices and controls, shutdowns, alarm interface, caution/ advisory signs, functional checkout and testing, training and all other operations necessary for a functional, UL Listed and/or FM approved HFC-227ea Clean Agent Suppression System.

D. Provide two (2) inspections during the first year of service. Inspections shall be made at 6-month intervals commencing when the system is first placed into normal service.

E. The general contractor shall be responsible for sealing and securing the protected spaces against agent loss and/or leakage during the 10-minute "hold" period.

F. The system(s) will be actuated by a High Sensitive Smoke Detection System (HSSD) located below the raised floors and within the rooms. See Specification Section 16710 for requirements.

G. Detectors shall be wired in standard cross-zoned detection. Cross zoning method will be submitted and approved by the Sandia National Laboratories Fire Marshal's office before installation.

H. Automatic operation of each protected area shall be as follows:

1. Actuation of one (1) zone, within the system, shall:

a. Illuminate the "ALARM" lamp on the control panel face.
b. Energize an alarm bell and/or an optional visual indicator.

c. Transfer sets of 5 Amp rated auxiliary contacts which can perform auxiliary system functions such as:
   1) Operate door holder/closures on access doors.
   2) Transmit a signal to a fire alarm system.
   3) Shutdown HVAC equipment.
d. Light an individual lamp on an optional graphic annunciator.

2. Actuation of a 2nd zone, within the system, shall:

a. Illuminate the "PRE-DISCHARGE" lamp on the control panel face.
b. Energize a predischarge horn or horn/strobe device.
c. Shut down the HVAC system and/or close dampers.
d. Start time-delay sequence (not to exceed 60 seconds).
e. System abort sequence is enabled at this time.
f. Light an individual lamp on an optional graphic annunciator.

3. After completion of the time-delay sequence, the Clean Agent system shall discharge and the following shall occur:

a. Illuminate a "SYSTEM FIRED" lamp on the control panel face.
b. Activate emergency power-off (EPO) features.
c. Energize a visual indicator(s) outside the hazard in which the discharge occurred.
d. Energize a "System Fired" audible device.

4. The system shall be capable of being actuated by manual discharge devices located at each hazard exit. Operation of a manual device shall duplicate the sequence description above except that the time delay and abort functions SHALL be bypassed. The manual discharge station shall be of the electrical actuation type and shall be supervised at the main control panel.

I. Coordinate with Specification Section 16741 for phone jack installations next to each FM200 fire suppression abort station. The phone system will be connected directly to the Central Alarm Station (CAS). Phone will auto-dial when picked up. The phone will be government furnished.

2.02 MATERIALS AND EQUIPMENT:

A. General Requirements

1. The HFC-227ea Clean Agent System materials and equipment shall be standard products of the supplier's latest design and suitable to perform the functions intended. When one or more pieces of equipment must perform the same function(s), they shall be duplicates produced by one manufacturer.

a. All devices and equipment shall be U.L Listed and/or FM approved.

B. FM-200 Storage And Distribution (Each system shall have its own supply of clean agent)

1. The system design can be modular, central storage, or a combination of both design criteria.

2. Systems shall be designed in accordance with the manufacturer's guidelines.

3. Each supply shall be located within the hazard area, or as near as possible, to reduce the amount of pipe and fittings required to install the system.

4. The clean agent storage containers shall be super-pressurized, with dry Nitrogen, to an operating pressure of 360 psi @ 70° F. (2500 kpa at 20° C). Containers shall be of high-strength alloy steel construction and conform to NFPA 2001.

5. Containers shall be actuated by parallel wired initiators through an agent release module located at each agent container.

6. Each container shall have a pressure gauge and low pressure switch to provide visual and electrical supervision of the container pressure. The low-pressure switch shall be wired to the control panel to provide an audible and visual "Trouble" alarm in the event the container pressure drops below 272 psi (1875 kpa). The pressure gauge shall be color coded to provide an easy, visual indication of container pressure.

7. Each container shall have a pressure relief provision that automatically operates when the internal temperature exceeds 150°F. (66°C).

8. Engineered discharge nozzles shall be provided, within the manufacturer's guidelines, to distribute the HFC-227ea agent throughout the protected spaces. The nozzles shall be designed to provide proper agent quantity and distribution.

    a. Nozzles shall be available in pipe sizes 3/8” through 2.0” (BPS 10mm through 50mm). Each size shall be available in 180° and 360° distribution patterns.

9. Distribution piping, and fittings, shall be installed in accordance with the manufacturer's requirements, NFPA 2001 and approved piping standards and guidelines. All distribution piping shall be installed by qualified individuals using good, accepted practices and quality procedures. All piping shall be adequately supported and anchored at all directional changes and nozzle locations.

    a. All piping shall be reamed, blown clear and swabbed with suitable solvents to remove burrs, mill varnish and cutting oils before assembly.
    b. All pipe threads shall be sealed with Teflon tape pipe sealant applied to the male thread ONLY.

PART 3 ELECTRICAL REQUIREMENTS

3.01 CONTROL PANEL

A. The Control Panel must be a listed device that has a releasing circuit and is listed for use with the agent release module.

B. Detectors: The High Sensitivity Smoke Detection System (HSSD) shall be installed in accordance with the manufacturer's specifications and the latest guidelines of NFPA No. 72. See Specification Section 16710 for requirements.

C. Manual Release (Electric): The electric manual release switch shall be a dual action device which provides a means of manually discharging the Suppression System when used in conjunction with the manufacturer's control system.

1. The Manual Release switch shall be a Fike P/N 10-1638 or a Manual Pull station, P/N 02-4110.

2. The Manual Release switch or Manual Pull station shall be a dual action device requiring two distinct operations to initiate a system actuation.

3. Manual actuation shall bypass the time delay and abort functions shall cause the system to discharge and shall cause all release and shutdown devices to operate in the same manner as if the system had operated automatically.

4. A Manual Release switch shall be located at each exit from the protected hazard and shall have an advisory sign provided at each location.

D. Abort Station: The optional Abort Station shall be the "Dead Man" type and shall be located next to each manual switch.

1. The Abort Station shall be a Fike P/N 10-1639.

2. The Abort Station shall be supervised and shall indicate a trouble condition at the Control Panel, if depressed, and no alarm condition exists.

3. "Locking" or "Keyed" abort stations shall not be permitted.

4. The abort station shall be located adjacent to each manual station and can be furnished in combination with a Manual Release Switch or in combination with a Manual Release Switch and Digital Countdown Timer (Fike P/N 20-046).

E. Audible and Visual Alarms: Alarm audible and visual signal devices shall operate from the Control Panel.

1. The Alarm Bell, Alarm Horn and Horn/Strobe devices shall be FIKE or equal in quality, performance and features. A Clean Agent label shall be attached to the strobe lens.

2. The visual alarm unit shall be a Fike Vertical Strobe device, or equal in quality, performance and features. A Clean Agent label shall be attached to the strobe lens when required.

3. A Strobe device shall be placed outside, and above, each exit door from the protected space. Provide an advisory sign at each light location.

F. Caution and Advisory Signs: Provide signs, as required, to comply with NFPA 2001 and the recommendations of the equipment supplier:

1. Entrance sign: (1) required at each entrance to a protected space.

2. Manual Discharge sign: (1) required at each manual discharge station.

3. Flashing Light sign: (1) required at each flashing light over each exit from a protected space.

G. System and Control Wiring: All system wiring shall be furnished and installed by the contractor.

1. All wiring shall be installed in electrical metallic tubing (EMT), or conduit, and must be installed and kept separate from all other building wiring.

2. All system components shall be securely supported independent of the wiring. Runs of conduit and wiring shall be straight, neatly arranged, properly supported, and installed parallel and perpendicular to walls and partitions.

3. The sizes of the conductors shall be those specified by the manufacturer. Color-coded wire shall be used. All wires shall be tagged at all junction points and shall be free from shorts, earth connections (unless so noted on the system drawings), and crosses between conductors. Final terminations between the Control Panel and the system field wiring shall be made under the direct supervision of a factory-trained representative.

4. All wiring shall be installed by qualified individuals, in a neat and workmanlike manner, to conform to the National Electrical Code, Article 725 and Article 760, except as otherwise permitted for limited energy circuits, as described in NFPA 72 -1993 edition. Wiring installation shall meet all local, state, province and/or country codes.

5. The complete system electrical installation, and all auxiliary components, shall be connected to earth ground in accordance with the National Electrical Code.

H. System Inspection and Checkout: After the system installation has been completed, the entire system shall be checked out, inspected and functionally tested by qualified, trained personnel, in accordance with the manufacturer's recommended procedures and NFPA standards.

1. All containers and distribution piping shall be checked for proper mounting and installation.

2. All electrical wiring shall be tested for proper connection, continuity and resistance to earth.

3. The complete system shall be functionally tested, in the presence of the owner or his representative, and all functions, including system and equipment interlocks, must be operational at least five (5) days prior to the final acceptance tests.

   a. Each detector shall be tested in accordance with the manufacturers recommended procedures, and test values recorded.
   b. All system and equipment interlocks, such as door release devices, audible and visual devices, equipment shutdowns, local and remote alarms, etc. shall function as required and designed.
   c. Each Control Panel circuit shall be tested for trouble by inducing a trouble condition into the system.

I. Training Requirements

1. Prior to final acceptance, the installing contractor shall provide operational training to SNL. Training session shall include Control Panel operation, manual and abort functions, trouble procedures, supervisory procedures, auxiliary functions and emergency procedures.

J. Operation and Maintenance

K. Prior to final acceptance, the installing contractor shall provide complete operation and maintenance instruction manuals, four (4) copies for each system, to the owner. All aspects of system operation and maintenance shall be detailed, including piping isometrics, wiring diagrams of all circuits, a written description of the system design, sequence of operation and drawing(s) illustrating control logic and equipment used in the system. Checklists and procedures for emergency situations, troubleshooting techniques, maintenance operations and procedures shall be included in the manual.

L. System Record Drawings

1. Upon completion of each system, the installing contractor shall provide four (4) copies of system "As-Built" drawings to the owner. The drawings shall show actual installation details including all equipment locations (i.e.: control panel(s), agent container(s), detectors, alarms, manuals and aborts, etc.) as well as piping and conduit routing details. Show all room or facilities modifications, including door and/or damper installations completed. One (1) copy of reproducible engineering drawings shall be provided reflecting all actual installation details.

M. Acceptance Tests

1. At the time "As-Built" drawings and maintenance/operations manuals are submitted, the installing contractor shall submit a "Test Plan" describing procedures to be used to test the control system. The Test Plan shall include a step-by-step description of all tests to be performed and shall indicate the type and location of test apparatus to be employed. The tests shall demonstrate that the operational and installation requirements of this specification have been met. All tests shall be conducted in the presence of the owner and shall not be conducted until the Test Plan has been approved.

2. The tests shall demonstrate that the entire control system functions as designed and intended. All circuits shall be tested: automatic actuation, solenoid and manual actuation, HVAC and power shutdowns, audible and visual alarm devices and manual override of abort functions. Supervision of all panel circuits, including AC power and battery power supplies, shall be tested and qualified.

3. A room pressurization test shall be conducted, in each protected space, to determine the presence of openings that would affect the agent concentration levels. The test(s) shall be conducted using the Retro-Tec Corp. Door Fan system, or equivalent, with integrated computer program. All testing shall be in accordance with NFPA 2001, Appendix B.

4. If room pressurization testing indicates that openings exist which would result in leakage and/or loss of the extinguishing agent, the installing contractor shall be responsible for coordinating the proper sealing of the protected space(s) by the general contractor or his sub-contractor or agent. The general contractor shall be responsible for adequately sealing all protected space(s) against agent loss or leakage. The installing contractor shall inspect all work to ascertain that the protected space(s) have been adequately and properly sealed. THE SUPPRESSION SYSTEM INSTALLING CONTRACTOR SHALL BE RESPONSIBLE FOR THE SUCCESS OF THE ROOM PRESSURIZATION TESTS. If the first room pressurization test is not successful, in accordance with these specifications, the installing contractor shall direct the general contractor to determine, and correct, the cause of the test failure. The installing contractor shall conduct additional room pressurization tests, at no additional cost to the owner, until a successful test is obtained. Copies of successful test results shall be submitted to the owner for record.

5. Upon acceptance by the owner, the completed system(s) shall be placed into service.

N. System Inspections

1. The installing contractor shall provide two (2) inspections of each system, installed under this contract, during the one-year warranty period. The first inspection shall be at the six-month interval, and the second inspection at the 12-month interval, after system acceptance. Inspections shall be conducted in accordance with the manufacturer's guidelines and the recommendations of NFPA 2001.

2. Documents certifying satisfactory system(s) operation shall be submitted to the owner upon completion of each inspection.

O. Warranty

1. All system components furnished, and installed under this contract, shall be guaranteed against defects in design, materials and workmanship for the full warranty period which is standard with the manufacturer, but in no case less than one (1) year from the date of system acceptance.

END OF SECTION

SECTION 15540

HVAC PUMPS

PART 1 - GENERAL

1.01 RELATED DOCUMENTS

A. Drawings and general provisions of Contract, including General and Supplementary Conditions and Division 1 specification sections, apply to work of this section as if repeated herein.

B. Division 15, Section 15010, BASIC MECHANICAL REQUIREMENTS; Basic Mechanical Materials and Methods sections apply to work of this section.

1.02 DESCRIPTION

A. Extent of HVAC pumps work required by this section is indicated on drawings and schedules and by requirements of this section.

B. Codes and Standards:

1. HI Compliance: Design, manufacture and install HVAC pumps in accordance with HI "Hydraulic Institute Standards."

2. UL Compliance: Design, manufacture and install HVAC pumps in accordance with UL 778 "Motor Operated Water Pumps."

3. UL and NEMA Compliance: Provide electric motors and components which are listed and labeled by Underwriters Laboratories and comply with NEMA standards.

1.03 SUBMITTALS

A. Product Data: Submit manufacturer's pump specifications, installation and start-up instructions and current accurate pump characteristic performance curves with selection points clearly indicating capacity, BHP, NPSH and efficiency. Pumps shall be non-overloading throughout performance curve.

B. Shop Drawings: Submit manufacturer's assembly-type shop drawings indicating dimensions, weight loadings, required clearances and methods of assembly of components. Submit manufacturer's electrical requirements for power supply wiring to HVAC pumps.

C. Maintenance Data: Submit maintenance data and parts lists for each type of pump, control and accessory; including "trouble shooting" maintenance guide.

Include this data, product data, shop drawings, and wiring diagrams in maintenance manual; in accordance with requirements of Division 15, Section: BASIC MECHANICAL REQUIREMENTS.

PART 2 - PRODUCTS

2.01 PUMPS

A. General: Provide factory-tested pumps, thoroughly cleaned and painted with one coat of machinery enamel prior to shipment. Type, size, and capacity of each pump is listed in pump schedule. Provide pumps of same type by same manufacturers.

2.02 FRAME-MOUNTED END SUCTION CENTRIFUGAL PUMPS

A. General: Provide frame-mounted end suction pumps where indicated, and of capacities and have characteristics as scheduled, and specifically designed for quiet operation.

B. Type: Horizontal mount, single stage, vertical split case, flexible coupling, base mounted, designed for 1210 kpa *(175 psi)* working pressure.

C. Casing: Cast iron, bronze fitted, 865 kpa *(125 psi)* ANSI flanges, tappings for gage and drain connections.

D. Wearing rings: Bronze, rings to include casing wearing ring and impeller wearing ring.

E. Shaft: Steel, AISI-1045, with replaceable stainless steel shaft sleeve.

F. Mechanical Seals: All metal parts to be 316 stainless steel, Buna-N bellows, Ni-resist seat and carbon washer.

G. Bearings: Heavy duty regreasable ball bearings with not less than 2-year minimum bearing life under extreme conditions and average life of 10 years.

H. Motor: NEMA, open, drip-proof, regreasable ball bearings, energy efficient type.

I. Impeller: Cast bronze, single suction enclosed type, hydraulically and dynamically balanced, and keyed to shaft. The ratio of the maximum impeller diameter to the actual impeller diameter shall be no less than 11:10.

J. Baseplate: Structural steel with welded cross members and open grouting area. Base plate shall be completely grouted to concrete base.

K. Coupling: Flexible, capable of absorbing torsional vibration, equipped with coupling guard.

L. Manufacturer: Subject to compliance with requirements, provide frame-mounted end suction pumps of one of the following:

Amtrol Inc.
Armstrong Pumps, Inc.
Aurora Pump; Unit of General Signal
Bell & Gossett ITT; Fluid Handling Division
Federal Pump Corporation
Paco Pumps
Peerless Pump; Indian Head Company
Weinman Pump LFE Corporation; Fluids Control Division
Worthington Pump, Inc.

2.03 CLOSE-COUPLED END SUCTION CENTRIFUGAL PUMPS

A. General: Provide cast iron bronze fitted close-coupled end suction pumps where indicated and of capacities and having characteristics as scheduled.

B. Casing: Fine grain cast iron, vertical split, for 865 kpa *(125 psi)* WP, and hydrostatically tested at not less than 1310 kpa *(190 psi)*, and shall have 865 kpa *(125 psi)* ANSI flanged suction and discharge connections; screwed connections on 32 mm *(1-1/4")* and smaller; drain plug, air cock, and casing wearing rings.

C. Impeller: Bronze, enclosed type, hydraulically and dynamically balanced, keyed to shaft and secured with locking screw.

D. Shaft: AISI 1035 heat treated steel, with water slinger. Maximum shaft deflection at impeller .005.

E. Shaft sleeve: Bronze sealed to shaft and keyed to the shaft.

F. Mechanical seals: All metal parts to be 316 stainless steel, Buna-N bellows, Ni-resist seat and carbon washer.

G. Motor: NEMA, Drip-proof, 1750 RPM, unless otherwise noted; ball bearing shall be grease lubricated, and shall be oversize or double. Motor shall be energy efficient type, wound for across-the-line starting.

H. Manufacturers: Subject to compliance with requirements, provide pumps of one of the following:

Amtrol Inc.
Armstrong Pumps, Inc.

Aurora Pump; Unit of General Signal
Bell & Gossett ITT; Fluid Handling Division
Federal Pump Corporation
Paco Pumps
Peerless Pump; Indian Head Company
Weinman Pump LFE Corporation; Fluids Control Division
Worthington Pump, Inc.

2.04 IN-LINE CENTRIFUGAL PUMPS

A. General: Provide in-line centrifugal pumps where indicated, of capacities as scheduled and specifically designed for quiet operation.

B. Type: Horizontal mount, vertical split case, oil-lubricated, designed for 865 kpa *(125 psi)* working pressure and 107º C *(225º F)* continuous water temperature.

C. Body: Cast iron, with suction and discharge gage tappings.

D. Shaft: Stainless steel *(Hardened Alloy Steel).*

E. Bearings: Oil-lubricated bronze journal bearings, or permanently lubricated ball bearings.

F. Seal: Mechanical, with carbon seal ring and ceramic seat.

G. Motor: NEMA, 1750 RPM, non-overloading at any point on pump curve, totally enclosed, fan cooled, oil-lubricated journal bearings, resilient mounted construction, built-in thermal overload protection on single phase motors.

H. Coupling: Self-aligning, flexible coupling.

I Impeller: Bronze, enclosed type, hydraulically and dynamically balanced, and keyed to shaft.

J. Manufacturer: Subject to compliance with requirements, provide in-line pumps of one of the following:

Amtrol Inc.
Armstrong Pumps, Inc.
Aurora Pump
Bell & Gossett ITT; Fluid Handling Division
Dunham-Bush, Inc.
Paco Pumps
Taco, Inc.

PART 3 - EXECUTION

3.01 INSTALLATION OF PUMPS

A. General: Install HVAC pumps where indicated, in accordance with manufacturer's published installation instructions, complying with recognized industry practices to ensure that HVAC pumps comply with requirements and serve intended purposes.

B. Access: Provide access space around HVAC pumps for service as indicated, but in no case less than that recommended by manufacturer.

C. Coordinate with other work to interface installation of pumps with piping and other components of the system.

D. Check alignment and, where necessary, realign shafts of motors and pumps within tolerances recommended by manufacturer.

E. Install units on bases or vibration mounts as shown; comply with manufacturer's indicated installation method.

F. Pipe sizes indicated on the drawings shall be full size to the point of connection to the pump flanges, increasers, or reducers. Piping components such as valves, strainers, flexible connectors, etc., shall be same size of the piping serving the pump.

3.02 ELECTRICAL CONNECTIONS

A. Ensure that pump units are wired properly, with rotation in direction indicated and intended for proper pump performance, wiring by Division 16.

3.03 FIELD QUALITY CONTROL

A. Start-up: Lubricate pumps before start-up. Start-up in accordance with manufacturer's instructions.

B. Upon completion of installation of pumps, and after motors have been energized with normal power source, bleed air from pump casings and test pumps to demonstrate compliance with requirements.

C. Cleaning: Clean factory-finished surfaces. Repair any marred or scratched surfaces with manufacturer's touch-up paint.

END OF SECTION

SECTION 15545

DEIONIZED COOLING WATER SYSTEM

PART 1 - GENERAL

1.01 RELATED DOCUMENTS

A. Drawings and general provisions of Contract, including General and Supplementary Conditions and Division 1 Specification sections, apply to work of this section as if repeated herein.

1.02 GENERAL

A. Provide deionized cooling water system as shown on the drawings and specified herein. System shall be complete, installed, tested and ready for operation by Sandia personnel.

1.03 QUALITY ASSURANCE

A. Manufacturer's Qualifications: Firms regularly engaged in manufacture of equipment, of types and capacities required, whose products have been in satisfactory use in similar service for not less than 5 years.

B. Installer's Qualifications: Firm with at least 3 years of successful installation experience on projects with equipment work similar to that required for project.

C. Codes and Standards:

1. UL and NEMA Compliance: Provide electric motors and ancillary electrical components which are UL-listed and labeled, and which comply with NEMA standards.

2. NEC Compliance: Install equipment in accordance with applicable electrical requirements of NFPA 70, "National Electrical Code".

3. ASME Compliance: Comply with applicable requirements of ASME Boiler and Pressure Vessel Code.

1.04 SUBMITTALS

A. Product Data: Submit manufacturer's technical product data, including rated capacities of selected models clearly indicated performance selection points clearly indicated, weights (shipping, installed, and operating where applicable), furnished specialties and accessories; and installation and start-up instructions on the following:

1. Pipe, Fittings, Valves and Accessories
    a. Tanks
    b. Cooling Tower
    c. Heat Exchanger
    d. Carbon Removal
    e. Mixed Bed Dionizer
    f. Prefilter
    g. Pumps
    h. Controller and Indicator
    i. Make-up Controller

B. Shop Drawings: Submit manufacturer's assembly-type shop drawings indicating dimensions, weight loadings, required clearances, and methods of assembly of components.

C. Wiring Diagrams: Submit manufacturer's ladder-type wiring diagrams for electrically operated equipment. Differentiate between portions of wiring that are factory-installed and portions to be field-installed.

D. Maintenance Data: Submit maintenance data and parts lists for each equipment item, including "trouble-shooting" maintenance guide. Include this data, product data, shop drawings, and wiring diagrams in maintenance manual; in accordance with requirements of Section: "BASIC MECHANICAL REQUIREMENTS".

PART 2 - PRODUCTS

2.01 DEIONIZER COOLING WATER PIPING

A. Pipe: Schedule 80 CPVC, conforming to CPVC 23447-B and ASTM F-441.

B. Fittings: Schedule 80 CPVC socket type conforming to ASTM F-439.

C. Valves: Double Union CPVC socket type ball valves rated at 1034kpa *(150 psi)* at 49 deg. C *(120 F)* non-shock service.

D. Joints: Pipe, fittings, valves and accessories shall be joined by a solvent cementing process in strict compliance with the manufacturer's recommendations. Flanges shall be used to interface with other piping systems and equipment.

E. Support Spacing of Schedule 80 CPVC (49 deg. C or less)*(120 F or less)*:

Pipe Size(mm)	Spacing(m)
15,20,25	1.2
32,40	1.5
50,65	1.7

80,100	1.8

Pipe Size(in.)	*Spacing(ft.)*
1/2, 3/4, 1	*4 ft.*
1-1/4, 1-1/2	*5 ft.*
2, 2-1/2	*5-1/2 ft.*
3, 4	*6 ft.*

F. Provide 410 mm *(16 inch)* long 1.61 mm *(16 gage)* shield at each hanger.

G. Support spacing may be increased when continuous support is provided by sheet metal trough as manufactured by Pipe Shields, Inc.

H. Test: System shall be hydrostatically tested at 865 kpa *(125 psi)* with temperature not above 24 deg. C *(75 F).*

I. Cleaning: Pipe shall be flushed with city water to remove debris. Pipe shall be reflushed with deionized water, drained, and then filled with deionized water.

J. Pipe Insulation: See Section 15250, MECHANICAL INSULATION.

K. Manufacturer: R&G Sloane Manufacturing Co., or equal.

2.02 DEIONIZED WATER TANK

A. Tank shall be fiber glass reinforced plastic (FRP), vertical cylindrical, flat bottoms, dished top, seamless construction, with FRP lifting lugs, galvanized steel tie down lugs, side shell drain, 100 mm *(4")* mushroom vent, 610 mm *(24")* hinged manway, internal baffle, and overflow.

B. Tank shall have flanged nozzles, dip tubes with internal support, flanged nozzle for flange mounted level switch and make-up solenoid valve in water make-up line.

C. Minimum Design Safety Factor: 10 to 1 at 1.2 specific gravity.

D. Dimensions, capacity and arrangement in accordance with details and schedule on drawings.

E. Tank Insulation: See Section 15250, MECHANICAL INSULATION.

F. Manufacturer: Tankinetics, or equal.

2.03 COOLING TOWER

A. Refer to Section 15716 "PACKAGED COOLING TOWER-STEEL (DEIONIZED COOLING WATER SYSTEM)".

2.04 HEAT EXCHANGER

A. Refer to Section 15756 "HEAT EXCHANGER (PLATE TYPE).

2.05 ORGANIC REMOVAL SERVICE EXCHANGE CARBON BED

A. Carbon bed unit shall be a service exchange type for replacement exchange by supplier.

B. Fresh Carbon with Each Exchange: Each replacement organic bed carbon unit shall contain new carbon to assure maximum water quality and service life of the carbon bed.

C. Capacity: 0.9 l/s, 70 kpa to 105 kpa pressure drop, .98 cubic meter *(15 GPM, 10-15 PSIG pressure drop, 3.2 cubic feet)* carbon volume.

D. Dimensions: 355 mm *(14")* diameter, 1270 mm *(50")* high, 25 mm *(1")* connections.

E. Manufacturer: Continental Water Systems Corporation, Model SD1CR 2992, or equal.

2.06 MIXED BED SERVICE EXCHANGE DEIONIZER

A. Deionizer shall be a mixed bed service exchange type for replacement exchange by supplier.

B. Capacity: 0.9 l/s, 70 kpa to 105 kpa pressure drop *(15 GPM, 10-15 PSIG pressure drop),* grain removal 40 as C_aCO_3.

C. Dimensions: 355 mm *(14")* diameter, 1270 mm *(50")* high, resin tank capacity 1.09 cubic meter *(3.60 cubic feet)*, resin volume, cation 0.43 cubic meter *(1.44 cubic feet),* anion 0.66 cubic meter *(2.16 cubic feet).*

D. Manufacturer: Continental Water Systems Corp., Model SD1M 2991, or equal.

2.07 PRE-FILTER

A. Filter unit shall consist of housing, cap, sealing ring, cartridge and mounting bracket.

B. Housing: FDA reinforced polypropylene sump with glass reinforced cap, Buma-N 0-Ring, and 25mm *(1")* connections.

C. Bracket: 304 stainless steel.

D. Cartridge: Polyester and cellulose fiber blend media, 5 micron, flow rate 1.3 l/s *(20 GPM).*

E. Dimensions: 333 mm *(13-1/8")* high, 185 mm *(7-1/4")* OD.

F. Manufacturer: Ametek, Big Blue housing, CP5-BBS cartridge, or equal.

2.08 COOLING TOWER PUMP

A. Refer to Section 15540, "HVAC PUMPS" and Pump Schedule on Drawings.

2.09 DEIONIZED WATER PUMP

A. Pump shall be a multi-stage centrifugal vertical shaft, with electric TEFC Motor.

B. Construction: All wetted parts shall be 316 stainless steel, motor stool and coupling of cast iron, pump base of steel, seal 0-rings of EPDM rubber, seal face of tungsten carbide, bearings of teflon and base 0-ring of viton.

C. Manufacturer: Grundfos Series C, Model CP2, or equal.

2.10 DI COOLING WATER DISTRIBUTION PUMP

A. General: Provide frame-mounted end suction centrifugal pump where indicated, and of capacities and have characteristics as scheduled and specified.

B. Type: Horizontal mount, single stage, vertical split case, flexible coupling, base mounted, designed for 1210 kpa *(175 psi)* working pressure.

C. Casing: 316 stainless steel ASTM A744 and A351 with ANSI flanges, tappings for suction and discharge gages and drain connections.

D. Shaft: 316 stainless steel, with replaceable stainless steel shaft sleeve.

E. Mechanical Seals: All metal parts to be 316 stainless steel, Buna-N bellows, Ni-resist seat and carbon washer.

F. Bearings: Heavy duty regreasable ball bearings with not less than 2-year minimum bearing life under extreme conditions and average life of 10 years.

G. Motor: NEMA, TEFC, regreasable ball bearings, energy efficient type.

H. Impeller: 316 stainless steel, single suction semi-open type, hydraulically and dynamically balanced, and keyed to shaft. The ratio of the maximum impeller diameter to the actual impeller diameter shall be no less than 11:10.

I. Baseplate: Structural steel with welded cross members and open grouting area. Base plate shall be completely grouted to concrete base.

J. Coupling: Flexible, capable of absorbing torsional vibration, equipped with coupling guard.

K. Manufacturer: Subject to compliance with requirements, provide frame-mounted end suction centrifugal pump as manufactured by Durco Mark III 2K3X1.5-10A or equal.

2.11 DI COOLING WATER HEAT EXCHANGER PUMP

A. Same as "DI Cooling Water Distribution Pump".

2.12 CONDUCTIVITY MONITOR/CONTROLLER

A. Monitor shall measure the conductivity of deionized water with temperature compensation. Unit shall be single range, linear conductivity, with range of 0 to 20, direct readout, manual calibration check, alarm contacts, pump control contacts above and below level indication, field mount, NEMA 3 enclosure, 120 V, AC, 60 Hz.

1. Manufacturer: Foxboro, Model No. 915M-05AS, or equal.

B. Conductivity cell shall be suitable for dip tube mounting, standard temperature range, 316 SS cell, for use with conductivity monitor.

1. Manufacturer: Foxboro No. 910-EG2, or equal.

2.13 QUALITY LIGHT

A. Provide a quality light between the deionizer beds to indicate when the first bed is depleted. Set point to be 200,000 ohms.

2.14 MAKE-UP WATER CONTROLLER

A. Make-up water controller shall sense tank water level and operate an electric solenoid valve in domestic water line to maintain water level.

B. Controller: Tank mounted water level switch shall have stainless steel float and rods.

C. Make-up water valve shall be a electric solenoid operated bronze body valve, 865 kpa *(125 psi)* rating.

2.15 DI COOLING WATER RETURN UNIT

A. Provide DI cooling water return units as indicated on the drawings, details, schedule and as specified herein.

B. Units shall be a factory assembled and tested package as follows:

1. Insulated water storage tank with vent and tappings for water connections and controls.

2. Tank Material: Double wall insulated fiberglass.

3. Pump and Motor: Turbine type, electric motor drive, with pressure relief valve.

4. Housing: Acoustically insulated vinyl-clad panels. Dimensions 710x660x865 mm *(28" x 26" x 34")* high.

5. Piping: Internal piping shall be Schedule 80 CPVC with fittings.

6. Controls: Level switch sensing three levels, start level, stop level and alarm level.

7. Control Panel: Panel shall include:

a. Pump Starter

b. HOA Switch

c. Pilot Lights - Pump On - Pump Off - High Level

d. Audio Alarm Horn

e. Horn Silencing Switch

f. Temperature Gage

8. Sequence: When water level rises to start level the pump shall start and run until tank level is lowered to stop level. High level shall sound audio alarm and indicate visual alarm.

9. Manufacturers:

Haskris

Remcor
Application Engineering Corp.

PART 3 - EXECUTION

3.01 INSTALLATION

A. Install equipment, piping and accessories in accordance with the manufacturer's written instructions.

B. Coordinate installation with other work as necessary to interface with piping systems.

C. Test units for required performance and submit certified test report to Sandia Delegated Representative.

END OF SECTION

SECTION 15555

HOT WATER BOILER (FIRETUBE)

PART 1 - GENERAL

1.01 RELATED DOCUMENTS

A. Drawings and general provisions of Contract, including General and Supplementary Conditions and Division 1 Specification sections, apply to work of this section as if repeated herein.

1.02 DESCRIPTION

A. Provide hot water boilers as indicated on the drawings, details, equipment schedules and specifications.

B. Manufacturer: Cleaver-Brooks, Model CB, Series 200, or equal, for firing on natural gas with 1,000 Btu/cu. ft., or No. 2 fuel oil.

C. Capacity: The model number, and boiler horsepower rating, design pressure and working pressure in accordance with equipment schedule.

D. Submittals: Submit manufacturer's brochure, complete performance data, wiring diagrams, dimension prints, and dimensioned drawing showing boilers and accessories and space relationships to piping, structure and equipment. Submit operating and maintenance instructions for inclusion in operating and maintenance manual. Furnish National Board Certificate to the SDR.

PART 2 - PRODUCTS

2.01 HOT WATER BOILERS

A. General Boiler Design: The hot water boilers shall be four pass horizontal firetube up-draft boilers with 0.46 square meters *(five (5) square feet)* of heating surface per rated boiler horsepower. Units shall be mounted on heavy steel frames with integral forced draft burner and burner controls. The complete packaged boiler shall be listed by Underwriters Laboratories and shall bear the UL label. The boilers shall be completely preassembled and fire tested at the factory. The units shall be ready for immediate mounting on floor or simple foundation and ready for attachment of water, fuel, electrical and vent connections.

B. Boiler Shell: The boiler shall be constructed in accordance with ASME Boiler Code and must receive authorized boiler inspection prior to shipment. A copy of the inspection report shall be furnished to the SDR.

1. The hot water return and outlet connections shall be located on the top center line of the boiler. The boiler shall be designed to mix the return water with the boiler water by forced internal thermal circulation. A dip tube shall be included as an integral part of the hot water outlet.

2. Two lifting eyes shall be located on top of the boiler. Front and rear doors on the boiler shall be hinged or davited. Doors are to be sealed with tadpole gaskets and fastened tightly using heavy duty cap screws that thread into replaceable brass nuts.

3. Rear refractory and insulation shall be contained in the formed rear door which swings open for inspection of such.

4. Front and rear tube sheets and all flues shall be fully accessible for inspection or cleaning when the doors are swung open. The shell shall be furnished with adequate hand holes to facilitate boiler inspections and cleaning. A manhole shall be provided.

5. The exhaust gas vent shall be located near the front of the boiler on the top center line and shall contain a stack thermometer.

6. Observation ports for the inspection of flame conditions shall be provided at each end of the boiler.

7. The boiler insulation shall consist of a 2 inch fiberglass blanket under a sectional preformed sheet metal lagging. This insulation must be readily removable and reinstalled, if required.

8. The entire boiler base frame and other components shall be factory painted before shipment, using a hard-finish enamel.

C. Hot Water Boiler Trim: Provide the following items installed on the boiler:

1. Low Water Cutoff: A low water cutoff control shall be mounted on the side of the boiler. It is to be wired in the burner control circuit to prevent burner operation if the boiler water falls below a safe level.

2. A temperature gauge shall be mounted on the boiler.

3. A pressure gauge shall be mounted on the boiler.

4. Temperature controls (for regulation of burner operation) shall be mounted on the boiler with the temperature sensing elements located adjacent to the hot water outlet.

5. Water relief valves shall be of a type and size to comply with code requirements.

D. Forced Draft Blower: All air combustion shall be supplied by a forced draft blower mounted in the front boiler door, above the burner to eliminate vibration and reduce noise level. The impeller shall be cast aluminum, radial blade, carefully balanced and directly connected to the blower motor shaft.

E. Burner and Flame Failure Controller: The program relay shall control ignition, starting and stopping of the burner and shall provide both a precombustion purge and a postcombustion purge. It shall shut down the burner in the event of ignition, pilot, or main flame failure.

F. Burner and Piping: The burner shall be integral with the front head of the boiler and shall be the high radiant multiport type approved for operation with natural gas and No. 2 fuel oil.

1. The burner shall operate on the full-modulation principle.

2. The burner must always return to the low fire position for ignition.

3. The gas pilot shall be the premix type with automatic electric ignition for both gas and oil. An electronic detector shall monitor the pilot so that the primary fuel valve cannot open until the pilot flame has been established.

4. Combustion air damper and gas butterfly valve shall be operated by a single damper control motor that shall regulate the fire according to load demand. Potentiometer type positioning controls shall regulate the operation of the damper control motor.

G. Gas System, Primary Fuel: The gas burner piping system on the unit shall include a primary gas shutoff valve, motor operated with spring return. It must be controlled to start or stop the gas burner and to close automatically in the event of power failure, flame failure, or a low water condition. An additional valve of the lubricated plug type shall be located ahead of the motorized valve for manual shutoff.

1. A plugged leakage test cock and a second lubricated plug cock shall be provided as a means for a tightness check of the primary shutoff valve.

2. A proof of closure switch shall be provided on the primary shutoff valve, plus high and low gas pressures switches shall be provided.

3. A second motorized safety shutoff valve, plus an additional plugged leakage test cock shall be provided.

4. A vent valve shall be located between the safety shutoff valves.

5. Gas pressure regulators for the main and pilot gas lines shall be furnished for each boiler. They shall be selected to withstand 125% of the incoming gas pressure and reduce it to match boiler requirements.

6. Burners and Controls shall include all devices to meet Industrial Risk Insurers (IRI) requirements, State of California Safety Orders, NFPA and UL Standards 296 and 795.

H. Oil System, Secondary Fuel:

1. A base mounted oil pump with flexible coupling and a capacity of approximately twice the maximum burning rate shall be included. The oil set shall be shipped loose for installation in location as indicated.

2. Low pressure air atomizing system shall include belt driven air compressor, lubricating oil tank, oil level indicator, inlet air filter, and air pressure gauge.

3. The fuel oil system on the unit shall include oil pressure regulating devices, oil metering controls, dual solenoid shutoff valves, pressure gauges, and oil strainer.

4. A single tip retractable nozzle with flexible hoses for easy burner removal shall be furnished.

I. Control Panel: The control panel shall be mounted on the front door of the boiler and shall be conveniently located for the operator. It shall be a NEMA 1A enclosure and shall have a cabinet key lock.

1. The flame safeguard control shall be Cleaver-Brooks Model CB70 having computerized solid state control with sequence lights, flame on lights and annunciation. Control shall have a fixed operating sequence incapable of being manually advanced and an internal circuit which will ignore momentary sequencing switches, but will lock out and annunciate if abnormal conditions persist. Control shall be non-recycle type which will self check for internal failures, for high fire and low fire failure and for failure of main fuel valves to close during all non-firing cycles including post purge and stand-by. The control shall lock out and annunciate on all the above failures.

2. In conjunction with the above control, the control circuit shall be set up to give an audio alarm on all the above failures plus any safety limit shutdown.

J. Efficiency Guarantee: The boiler must be guaranteed to operate at a minimum fuel-to-water efficiency of 80 percent from 30 to 100 percent of rating.

K. Shop Tests: The packaged boiler must receive factory tests to check the construction, controls, and operation of the unit. All tests may be witnessed by the purchaser, if desired.

PART 3 - EXECUTION

3.01 INSTALLATION

A. Install boilers, where shown, in accordance with equipment manufacturer's written instructions and with recognized industry practices, to ensure that boilers comply with requirements and serve intended purposes. Comply with requirements of state and local boiler codes and applicable provisions of ASME boiler code standard.

B. Install standard boiler trim, as pressure gauge, temperature gauge, safety relief valves, etc., furnished with boiler but not installed at factory.

C. Coordinate with other work (plumbing, heating and fuel piping) as necessary to interface installation of boilers with other components of boiler system.

D. Flush and clean boilers upon completion of installation in accordance with manufacturer's instructions.

3.02 FIELD QUALITY CONTROL

A. Test assembled boiler, boiler piping and accessories, including but not limited to, safety and safety relief valves, gauges, etc., in accordance with applicable sections of ASME Boiler and Pressure Vessel Code.

B. Arrange with National Board of Boiler and Pressure Vessel Inspectors for inspection of boiler piping, observation of hydrostatic testing, and for certification of completed boiler unit. Furnish certificate to Sandia.

3.03 START-UP

A. Starting Service: After boiler installation is completed, the manufacturer shall provide the services of a field representative for starting the units. This service shall include two days per boiler, per fuel.

B. Contractor responsibilities regarding start-up:

1. Boil-out boilers with cleaning solution, rinse, and fill with treated water.

2. Advise Sandia to have necessary fuel available.

3. Provide for loading boiler during start-up adjustment.

4. Arrange for representatives of (Sandia, Contractor, Inspectors, Engineer, etc.) to be at the job site to meet with the manufacturer's representative upon his arrival.

3.04 ACCEPTANCE TEST

A. Acceptance test of boilers shall conform to ASME Test Code for Stationary Steam Generating Units.

B. Submit four (4) copies of test reports and calculations to the Sandia Delegated Representative. Report shall include all information required to obtain operation permit from Bay Area Pollution Control District.

3.05 PERSONNEL TRAINING

A. Boiler Operator Training: Train Owner's personnel (boiler operators) in proper operation and maintenance of boilers.

END OF SECTION

SECTION 15559

STEEL WATER TUBE BOILERS

PART 1 - GENERAL

1.01 RELATED DOCUMENTS

A. Drawings and general provisions of Contract, including General and Supplementary Conditions and Division 1 Specification sections, apply to work of this section as if repeated herein.

1.02 DESCRIPTION

A. Provide hot water *(steam)* boilers as indicated on the drawings, details, equipment schedules and specifications.

B. Capacity: The model number, and boiler horsepower rating, design pressure and working pressure in accordance with equipment schedule.

C. Submittals: Submit manufacturer's brochure, complete performance data, wiring diagrams, dimension prints, and dimensioned drawing showing boilers and accessories and space relationships to piping, structure and equipment. Submit operating and maintenance instructions for inclusion in operating and maintenance manual. Furnish National Board Certificate to the SDR.

PART 2 - PRODUCTS

2.01 HOT WATER BOILERS

A. General Boiler Design: The hot water *(steam)* boilers shall be in accordance with HI, "Testing and Rating Standard for Cast Iron and Steel Heating Boilers". Boiler shall have 0.46 square meters *(five (5) square feet)* of heating surface per rated boiler horsepower. Units shall be mounted on heavy steel frames with integral forced draft burner and burner controls, boiler trim, refractory, insulation, and jacket. The complete packaged boiler shall be listed by Underwriters Laboratories and shall bear the UL label. The boilers shall be completely preassembled and fire tested at the factory. The units shall be ready for immediate mounting on floor or simple foundation and ready for attachment of water, fuel, electrical and vent connections.

B. Boiler Shell: The boiler shall be constructed in accordance with ASME Boiler Code and must receive authorized boiler inspection prior to shipment. A copy of the inspection report shall be furnished to the SDR.

1. Constructed of welded steel plate with adequately sized water legs and tube headers, providing thermal water circulation without an external circulation source.

2. Tubes: Seamless water tubes, minimum 2 mm(13 gauge) steel, inclined tube design for straight tube boiler, or seamless water tubes, minimum 2.7 mm (12 gauge) steel, six pass serpentine bend design not subject tothermal shock for flexible tube boiler. Individual tubes shall be easily removed and replaced, without either welding or rolling, and without entry into combustion chamber or any major disassembly of the jacket.

3. Provide two lifting eyes on top of the boiler.

4. Provide adequate tappings, observation ports, removable panels, and access doors for entry, cleaning and inspection.

5. Insulate casing with readily removable 50 mm *(2")* thick glass fiber blanket insulation covered by sectional, preformed minimum 1.3 mm *(18 gauge)* sheet metal jacket. Boiler casing temperature shall not exceed ambient boiler room temperature by more than -10 deg. C *(18 deg. F)* with surface air velocity of 0.304 m/s *(1 ft/s)*.

6. The entire boiler base frame and other components shall be factory painted before shipment, using a hard-finish enamel.

C. Hot Water Boiler Trim: Provide the following items installed on the boiler:

1. Low water cutoff with automatic reset integral with water column to prevent burner operation automatically when boiler water falls below safe level. Provide a probe type auxiliary low water cut off with manual reset.

2. Combination pressure/temperature gauge shall be mounted on the boiler.

3. ASME rated pressure relief valve shall be mounted on the boiler.

4. Temperature controls (for regulation of burner operation) shall be mounted on the boiler with the temperature sensing elements located adjacent to the hot water outlet.

5. Air vent tapping in boiler shell.

C. Steam Boiler Trim: Provide the following items installed on the boiler:

1. Low water cutoff with automatic reset integral with water column to prevent burner operation automatically when boiler water falls below safe level. Provide a probe type auxiliary low water cut off with manual reset.

2. Boiler feedwater condensate return pump control, integral with water column to maintain level automatically by controlling pump operation.

3. Operating pressure controller for burner to maintain steam pressure setting.

4. High limit pressure controller with manual rest for burner to prevent steam pressure from exceeding safe system pressure.

5. Automatic conductivity blowdown control and direct chemical feed system to boiler and condensate tank.

D. Forced Draft Burner: High radiant annular entry, premix flame retention power burner with electric ignition with gas-electric ignition and gas pressure regulator.

E. Burner and Flame Failure Controller: The program relay shall control ignition, starting and stopping of the burner and shall provide both a precombustion purge and a postcombustion purge. It shall shut down the burner in the event of ignition, pilot, or main flame failure.

F. Burner and Piping: The burner shall be integral with the front head of the boiler and shall be the high radiant multiport type approved for operation with natural gas and No. 2 fuel oil.

1. The burner shall operate on the full-modulation principle.

2. The burner must always return to the low fire position for ignition.

3. The gas pilot shall be the premix type with automatic electric ignition for both gas and oil. An electronic detector shall monitor the pilot so that the primary fuel valve cannot open until the pilot flame has been established.

4. Combustion air damper and gas butterfly valve shall be operated by a single damper control motor that shall regulate the fire according to load demand. Potentiometer type positioning controls shall regulate the operation of the damper control motor.

G. Gas System, Primary Fuel: The gas burner piping system on the unit shall include a primary gas shutoff valve, motor operated with spring return. It must be controlled to start or stop the gas burner and to close automatically in the event of power failure, flame failure, or a low water condition. An additional valve of the lubricated plug type shall be located ahead of the motorized valve for manual shutoff.

1. A plugged leakage test cock and a second lubricated plug cock shall be provided as a means for a tightness check of the primary shutoff valve.

2. A proof of closure switch shall be provided on the primary shutoff valve, plus high and low gas pressures switches shall be provided.

3. A second motorized safety shutoff valve, plus an additional plugged leakage test cock shall be provided.

4. A vent valve shall be located between the safety shutoff valves.

5. Gas pressure regulators for the main and pilot gas lines shall be furnished for each boiler. They shall be selected to withstand 125% of the incoming gas pressure and reduce it to match boiler requirements.

6. Burners and Controls shall include all devices to meet Industrial Risk Insurers (IRI) requirements, State of California Safety Orders, NFPA and UL Standards 296 and 795.

H. Oil System, Secondary Fuel:

1. A base mounted oil pump with flexible coupling and a capacity of approximately twice the maximum burning rate shall be included. The oil set shall be shipped loose for installation in location as indicated.

2. Low pressure air atomizing system shall include belt driven air compressor, lubricating oil tank, oil level indicator, inlet air filter, and air pressure gauge.

3. The fuel oil system on the unit shall include oil pressure regulating devices, oil metering controls, dual solenoid shutoff valves, pressure gauges, and oil strainer.

4. A single tip retractable nozzle with flexible hoses for easy burner removal shall be furnished.

I. Control Panel: The control panel shall be mounted on the front door of the boiler and shall be conveniently located for the operator. It shall be a NEMA 1A enclosure and shall have a cabinet key lock.

1. The flame safeguard control shall be Honeywell "7800 Series" or equal flame monitor programming control, to supervise pilot and main flame, with an infrared amplifier. Control shall have a fixed operating sequence incapable of being manually advanced and an internal circuit which will ignore momentary sequencing switches, but will lock out and annunciate if abnormal conditions persist. Control shall be non-recycle type which will self check for internal failures, for high fire and low fire failure and for failure of main fuel valves to close during all non-firing cycles including post purge and stand-by. The control shall lock out and annunciate on all the above failures.

2. In conjunction with the above control, the control circuit shall be set up to give an audio alarm on all the above failures plus any safety limit shutdown.

J. Efficiency Guarantee: The boiler must be guaranteed to operate at a minimum fuel-to-water efficiency of 80 percent from 30 to 100 percent of rating.

K. Shop Tests: The boiler must receive factory tests to check the construction, controls, and operation of the unit. All tests may be witnessed by the SDR, if desired.

PART 3 - EXECUTION

3.01 INSTALLATION

A. Install boilers, where shown, in accordance with equipment manufacturer's written instructions and with recognized industry practices, to ensure that boilers comply with requirements and serve intended purposes. Comply with requirements of state and local boiler codes and applicable provisions of ASME boiler code standard.

B. Install standard boiler trim, as pressure gauge, temperature gauge, safety relief valves, etc., furnished with boiler but not installed at factory.

C. Coordinate with other work (plumbing, heating and fuel piping) as necessary to interface installation of boilers with other components of boiler system.

D. Flush and clean boilers upon completion of installation in accordance with manufacturer's instructions.

3.02 FIELD QUALITY CONTROL

A. Test assembled boiler, boiler piping and accessories, including but not limited to, safety and safety relief valves, gauges, etc., in accordance with applicable sections of ASME Boiler and Pressure Vessel Code.

B. Arrange with National Board of Boiler and Pressure Vessel Inspectors for inspection of boiler piping, observation of hydrostatic testing, and for certification of completed boiler unit. Furnish certificate to Sandia.

3.03 START-UP

A. Starting Service: After boiler installation is completed, the manufacturer shall provide the services of a field representative for starting the units. This service shall include two days per boiler, per fuel.

B. Contractor responsibilities regarding start-up:

1. Boil-out boilers with cleaning solution, rinse, and fill with treated water.

2. Advise Sandia to have necessary fuel available.

3. Provide for loading boiler during start-up adjustment.

4. Arrange for representatives of (Sandia, Contractor, Inspectors, Engineer, etc.) to be at the job site to meet with the manufacturer's representative upon his arrival.

3.04 ACCEPTANCE TEST

A. Acceptance test of boilers shall conform to ASME Test Code for Stationary Steam Generating Units.

B. Submit four (4) copies of test reports and calculations to the Sandia Delegated Representative. Report shall include all information required to obtain operation permit from Bay Area Pollution Control District.

3.05 PERSONNEL TRAINING

A. Boiler Operator Training: Train Owner's personnel (boiler operators) in proper operation and maintenance of boilers.

END OF SECTION

SECTION 15573

FIRETUBE BOILER ANNUNCIATOR PANELS

PART 1 - GENERAL

1.01 RELATED DOCUMENTS

A. Drawings and general provisions of Contract, including General and Supplementary Conditions and Division 1 Specification sections, apply to work of this section as if repeated herein.

1.02 DESCRIPTION

A. The extent of the boiler annunciator panel requirements is indicated on the drawings and the specifications.

B. Manufacturer: Cleaver-Brooks or equal.

C. Submit manufacturer's catalog data, dimensions, and wiring diagrams, indicating compliance with specifications.

PART 2 - PRODUCTS

2.01 BOILER ANNUNCIATOR PANELS

A. Provide a UL listed solid state diagnostic annunciator for each boiler. Each diagnostic annunciator shall indicate by means of illuminated characters all conditions which will prevent the boiler from firing or cause boiler shutdown. In addition, the annunciator will indicate "power on" and discriminate between "pilot failure" and "main flame failure," for ease of analyzing the cause of flame failure shutdowns.

B. As a minimum, the following readout will be illuminated when the indicated conditions exist:

ANNUNCIATOR READOUT	CONDITION(S)
Power On - (Green)	Power Available to Control System
Demand Satisfied - (Green)	Normal Boiler Shutdown -- System Temperature or Pressure Satisfied
Water Level - (Red)	Low Water Level

High Limit - (Red)	High Water Temperature
Gas Pressure - (Red)	Low or High Fuel Gas Pressure
Oil Pressure - (Red)	Low Fuel Oil Pressure
Oil Temperature - (Red)	Low Fuel Oil Temperature
Fuel Valve Closed Interlock - (Red)	Fuel Valves Not Closed When Boiler is Not Firing
Atomizer Media - (Red)	Low Atomizing Media Pressure After Appropriate Delay to Establish Pressure
Combustion Air - (Red)	Low Combustion Air Pressure After Appropriate Delay to Establish Pressure
Pilot Failure - (Red)	Failure of Pilot to Ignite or Loss of Pilot Prior to Introduction of Main Fuel
Main Flame Failure - (Red)	Failure of Main Fuel to Ignite or Loss of Flame During Firing

C. The diagnostic annunciator shall have a press to test switch which, when depressed, will illuminate the complete legend display to prove that all lights are operative.

PART 3 - EXECUTION

3.01 INSTALLATION

A. Install in accordance with manufacturer's instructions.

B. Locate panels as shown on the drawings or as directed.

C. Provide all electrical wiring associated with annunciator in accordance with National Electric Code.

END OF SECTION

SECTION 15576

CHIMNEY FLUE AND VENTS

PART 1 - GENERAL

1.01 RELATED DOCUMENTS

A. Drawings and general provisions of Contract, including General and Supplementary Conditions and Division 1 Specification sections, apply to work of this section as if repeated herein.

1.02 DESCRIPTION

A. Provide double-wall positive pressure chimney in accordance with the drawings and specifications.

B. Provide Type B double wall gas vents in accordance with the drawings and specifications.

1.03 SUBMITTALS

A. Produce Data: Submit product data including materials, dimensions, weights, and accessories.

B. Shop Drawings: Submit shop drawings including required clearances, assembly and installation instructions, and support of components.

C. Certificates: Submit certificates of materials compliance with specified ASTM, UL, and ASHRAE requirements.

D. Certificates: Submit complete engineering report certifying that stacks meet the design wind and seismic loads.

1.04 QUALITY ASSURANCE

A. Codes and Standards:

1. NFPA: Comply with NFPA 211 "Standard for Chimneys, Fireplaces, Vents and Solid Fuel Burning Appliances."

2. UL: Comply with applicable portions of UP safety standards; provide products which have been UP listed and labeled.

3. ASHRAE: Comply with the ASHRAE Equipment Handbook, Chapter 27, for Chimney, Gas Vent, and Fireplace Systems, material requirements and design criteria.

PART 2 - PRODUCTS

2.01 DOUBLE WALL POSITIVE PRESSURE METAL VENTS

A. Manufacturers: Subject to compliance with requirements, provide all steel, positive pressure double wall vents of one of the following:

Ampco Model VSI-II
Selkirk Metalbestos Model PS

B. Description: UL-labeled double wall metal stacks for use with building heating equipment burning gas, solid, or liquid fuels as described in NFPA 211.

C. Construction: 25 mm *(1")* minimum air space between walls; inner jacket of Type 316 stainless steel, 0.8 mm *(0.035")* thick; outer jacket of aluminum coated steel of the following thickness:

Size 250mm to 610 mm *(10" to 24"):* 0.635 mm *(0.025")* thick.

D. Accessories: UL-labeled tees, elbows, increasers, draft hood connectors, metal cap with bird barrier, adjustable roof flashing, storm collar, support assembly, thimbles, fire stop spacers, and fasteners fabricated of similar materials and designs as vent pipe straight sections.

2.02 TYPE B DOUBLE WALL GAS VENTS

A. Manufacturers: Subject to compliance with requirements, provide double wall vents of one of the following:

Ampco Model "B" Vent
Selkirk Metalbestos "B" vent

B. Description: UL-labeled double wall metal stacks for use with building heating equipment burning gas, solid, or liquid fuels as described in NFPA 211.

C. Construction: Inner pipe of sheet aluminum, and outer pipe of galvanized sheet steel, tested in compliance with UL 441.

D. Accessories: UL-labeled tees, elbows, increasers, draft hood connectors, metal cap with bird barrier, ad llar, support assembly, thimbles, fire stop spacers,

and fasteners fabricated of similar materials and designs as vent pipe straight sections.

PART 3 - EXECUTION

3.01 INSTALLATION OF DOUBLE WALL CONNECTORS, BREECHINGS, AND VENTS

A. Install all steel, positive pressure, double wall vents in accordance with manufacturer's installation instructions and UL listing. Maintain minimum clearances from combustibles specified in UL listing.

B. Seal joints between sections of positive pressure vents in accordance with manufacturer's installation instructions, and using only sealants recommended by manufacturer.

C. Support vents at intervals recommended by the manufacturer to support the weight of the vent and all accessories, without exceeding loading of appliances.

3.02 PROTECTION

A. Temporary Closure: At ends of breechings and chimneys which are not completed or connected to equipment, provide temporary closure which will prevent entrance of dust and debris until installations are completed.

END OF SECTION

SECTION 15680

CENTRIFUGAL COMPRESSOR WATER CHILLERS

PART 1 - GENERAL

1.01 DESCRIPTION

A. Drawings and general provisions of contract, including general and supplementary conditions apply to work of this section as if repeated herein.

B. The extent of the work is indicated by drawings and schedules, and by the requirements of this section. The unit shall include factory assembled and tested, packaged, water-cooled, liquid chillers consisting of centrifugal compressors, compressor motor, condenser, evaporator, refrigeration accessories, instrument and control panel including gauges and indicating lights and/or electronic display panel, auxiliary components and accessories, and motor starters. Ratings shall be in accordance with ARI Standard 550.

1.02 RELATED DOCUMENTS

A. If the requirements contained in the references listed in this Specification are found to parallel one another, the stricter shall govern. If conflict is found among these references, the contractor shall submit the conflict and a recommendation in writing to the SDR for resolution. The design and manufacture of all equipment and performance of all services provided under this Specification shall comply with the regulations, codes, and standards contained in the following references.

1. ANSI/ASQC Q9000-1: Quality Management and Quality Assurance Standards - Guidelines for Selection and Use

2. ANSI/ASQC Q9001: Quality Systems - Model for Quality Assurance in Design, Development, Production, Installation, and Servicing

3. ANSI/ASQC Q9002: Quality Systems - Model for Quality Assurance in Production, Installation, and Servicing

4. ANSI/ASQC Q9003: Quality Systems - Model for Quality Assurance in Final Inspection and Test

5. ANSI/ASQC Q9004-1: Quality Management and Quality System Elements - Guidelines

6. ARI Standard 550 - Standard for Centrifugal and Rotary Screw Water-Chilling Packages

7. ARI Standard 575 - Method of Measuring Machinery Sound Within Equipment Rooms

8. ASHRAE Standard 15 - Safety Code for Mechanical Refrigeration

9. ASHRAE Standard 34 - Number Designation and Safety Classification of Refrigerants (Including Addendum 34a)

10. ASHRAE Guideline 3, Reducing Emission of Fully Halogenated Chlorofluorocarbon (CFC) Refrigerants in Refrigeration and Air-Conditioning Equipment and Applications

11. ASME Boiler and Pressure Vessel Code, Section VIII, Rules for Construction of Pressure Vessels

12. ASTM B88-93a, Standard Specification for Seamless Copper Water Tube

13. Code of Federal Regulations, 40 CFR 82, Protection of Stratospheric Ozone

14. NEMA MG 1 - Motors and Generators

15. NEMA 250 - Enclosures for Electrical Equipment

16. AFBMA - American Anti-Friction Bearing Manufacturers Association

17. AGMA - American Gear Manufacturers Association Standards 6011 and 2000

1.03 SUBMITTALS

A. Information submitted to Sandia shall include:

1. Chiller principal unit layout dimensions and weights, with maintenance clearances.

2. Location and size of required interfaces, including: utility connection, drains, electrical power, etc.

3. Data on refrigerant leak rates to include, but not limited to, shaft seals and electrical terminal seals. The chiller manufacturer shall describe how reliable seal performance is achieved for all potential leak points, and how seals comply with ASHRAE Guideline 3.

4. Chiller manufacturer's computer selection printout showing full load capacity and efficiency; Integrated Part Load Value (IPLV) and Application Part Load Value (APLV) ratings; and other Vendor

standard data. All data shall be computed by the Vendors ARI 550 approved computerized selection methods.

B. Information **submitted** to Sandia **within 30 days of contract placement** shall include:

1. Instruction Manuals - Five (5) copies of instruction manuals shall be furnished containing the following information as a minimum:

a. Setup and Handling Instructions.
b. Operating Instructions.
c. Maintenance Instructions.
d. Recommended Spare Parts List.
e. All requisite equipment drawings, catalog cuts, and brochures.
f. System electrical connection drawings.

2. Factory Performance Test Procedure.

3. Factory Performance Test Results shall be submitted as specified in Section 3.02.

4. Outline Drawings - Equipment outline drawings shall be submitted, certified for construction, indicating the principal chiller unit layout including dimensions, weight, and anchor bolt locations. chiller manufacturer shall indicate on these drawings the allowable magnitude and direction of loadings at lift points to insure safe handling.

1.04 QUALITY ASSURANCE

A. All equipment and services furnished by the contractor under this Specification shall meet the regulations, codes, and standards specified herein.

B. Qualifications: Firms regularly engaged in the manufacture and installation of chillers, of the types and capacities required, whose products have been in satisfactory use in similar service for not less than 5 years.

1.05 MANUFACTURER'S WARRANTY

A. The chiller manufacturer shall provide a two (2) year parts and labor warranty on the chiller and equipment supplied under this Specification, five (5) year on motor and compressor. Chiller manufacturer shall be responsible for all expenses incurred to carry out the warranty, including shipment and disposal of parts. The warranty shall become effective at startup or six (6) months after shipment, whichever occurs first. All warranty service shall be provided at Sandia. The chiller manufacturer shall provide factory-trained and qualified service

employee(s) to respond within 24 hours of receiving a request for warranty service.

PART 2 - PRODUCTS

2.01 GENERAL

A. This Specification is applicable to ARI Standard 550 certified centrifugal water-cooled, mechanical refrigerant condensing liquid chillers.

1. The contractor shall provide single-piece, factory-assembled chiller package, including control panel or monitor. If a single piece chiller package is not the chiller manufacturer's standard for the application the contractor shall assemble the components at Sandia. All such assembly costs shall be at no additional cost to Sandia.

2. The control panel or monitor shall be mounted on the chiller package.

3. Following factory tests, if the chiller is disassembled for shipment, or to meet Sandia installation constraints specified in the drawings, the contractor shall reassemble the chiller at Sandia. Such work shall be at no additional cost to Sandia.

4. Contained within the chiller package shall be all factory wiring, piping, controls, and refrigerant charge. If required by the chiller manufacturer, the chiller refrigerant circuit(s) shall be evacuated prior to shipment and filled with inert gas. At the site, the contractor shall purge the inert gas and refill with refrigerant. Such work shall be at no additional cost to Sandia.

2.02 CENTRIFUGAL COMPRESSOR WATER CHILLERS

A. Compressor Casing

The chiller shall be of cast iron or cast steel, compressor casings with machined passages. All casings will be leak tested with refrigerant trace gas to 1.5 times the operating pressure.

B. Impellers

Impellers shall be single or multi-stage, in-line design, fully shrouded or open type, statically and dynamically balanced, and overspeed tested to 25 percent over operating speed.

C. Guide Vanes - Capacity Control

The chiller shall unload to at least 25% of design capacity with constant leaving chilled water temperature and condenser water relief per ARI, and be capable of continuous (at least 24 hours), stable, quiet operation at this point, without utilizing hot gas bypass. Modulating radial blade dampers shall be supplied on each stage of the compressor, with electric or hydraulic external mounted operators.

D. Bearings

Pressure lubricated cylindrical journal or rolling contact bearings shall be used. Cylindrical bearings shall be babbitt-lined, aluminum alloy, or bronze sleeve types. Rolling contact bearings shall be designed in accordance with the standards of AFBMA.

E. Lubrication

The chiller shall have positive oil lubrication system with oil charging valve, oil filter, and magnetic plug on strainer, as applicable to the proposed chiller type. The design shall insure adequate lubrication during starting, stopping, and normal operation.

F. Isolation Valves for Gauges and Controls

In accordance with ASHRAE Standard 15, isolation valves shall be provided to adequately isolate gauges, operating controls, and systems requiring frequent maintenance to minimize refrigerant loss during servicing or replacement.

G. Tubing for Compressor Oil Coolers and Controls

Steel or copper shall be used for compressor oil coolers and control tubing.

2.03 EVAPORATORS AND CONDENSERS

A. General

Evaporators and Condensers shall be of the shell-and-tube type, each in separate shells. Both heat exchangers shall be fabricated of seamless or welded steel construction with cast iron or fabricated steel heads. Tube support sheets should be placed to prevent contact between adjacent tubes. Water flow rates shall be maintained between 3 and 12 feet per second (fps).

B. Code Compliance

The chiller shall be designed, tested, and stamped refrigerant side and water side for working pressures in accordance with the American Society of Mechanical Engineers (ASME) Boiler and Pressure Vessel Code, Section VIII.

C. Insulation

The evaporator and water boxes shall be insulated with a minimum of 3/4 inch thick insulation having a maximum thermal conductivity of 0.28 BTU/hr-ft-°F (0.0404 W/m-°c). Other surfaces shall be insulated in accordance with the chiller manufacturer's standards.

D. Points of Connection

Water connections shall be of minimum 150 psig design with stubout type end inlet and outlet pipe connections utilizing raised face flanges. The Vendor shall provide water drain connections and thermometer wells for temperature controller and low temperature cutout if these instruments are required.

E. Baffles

The chiller shall have refrigerant chambers with baffles to distribute entering liquid.

F. Pressure Vessel Protection

The chiller shall have pressure vessel protection in accordance with the requirements of ASHRAE Standard 15, Section 9.7.

G. Water Boxes

Provide removable compact type water boxes.

H. Condenser and Evaporator Tubes

1. The condensers and evaporators shall be supplied with seamless copper tubes with chiller manufacturer's standard internal heat transfer enhancement. Tubes shall be rolled or silver brazed into tube sheets. Tubes shall meet the requirements of ASTM B88-93a.

2. Tubing shall have a minimum wall thickness of 0.035 inch, measured at the root of fin.

I. Ethylene Glycol Chilled Water Solutions

The chiller shall be selected assuming there is no freeze protection provided through the addition of ethylene glycol to the chilled water circuit. The chemical composition shall be 100% water, and 0% ethylene glycol, by weight.

J. Fouling Factor

The water-side field fouling allowances for condensers and evaporators shall be 0.00025 hr-ft^2-°F/BTU.

K. Passes

The chiller shall have the number of passes required to optimize performance based on the equipment schedule and drawings.

2.04 MOTOR

A. Compressor motors shall be the non-reversing, squirrel cage induction type. Motors shall be hermetic and either suction or liquid refrigerant cooled, or open motor drive. Single speed motors shall not exceed 3,600 RPM. Full load operation shall not exceed the nameplate rating. Standard nameplate voltage is 480 volts, 3-phase/60 HZ.

B. If open motor drive, provide with the following:

1. A complete chilled water Air Handling Unit (AHU) capable of maintaining the equipment room space at 104 degree F during outside conditions of 100 degree F while motor is at full load. AHU shall be installed complete and fully operational as part of this contract including all necessary piping, wiring, and air temperature control at no additional cost to Sandia. AHU location will be decided by SDR after award of contract.

2. A schedule and list of required maintenance and inspection due to alignment, refrigerant seal, coupling and bearings associated with the open motor. Cost for this shall be included at no additional cost to Sandia.

3. The operating leak rate data associated with open-drive chillers.

4. Motors in the chiller shall be open drip proof type.

2.05 PURGE SYSTEM (FOR LOW PRESSURE CHILLERS USING HCFC-123)

A. Chillers operating at sub-atmospheric pressure, or in which noncondensable refrigerant, water vapor, or other noncondensables could accumulate, shall be provided with a complete, high efficiency purge system to remove and return non-condensables and water vapor. The purge system shall be fully automatic in operation, and shall include necessary operating controls, piping, and refrigerant service valves to isolate it from the chilling unit. It shall be mounted on the chiller.

B. The purge system shall automatically discharge non-condensables in order to maintain system pressure and minimize leakage of refrigerant. The chiller shall be provide for manual blow-off of water vapor. The purge system shall provide operational data storage, diagnostic capability, and an on-board self-charging battery to prevent loss of critical data.

C. The purge system shall be factory tested as part of the Factory Functional Tests specified herein.

D. A display message and counter for monitoring purge frequency shall be provided with the purge system or as part of the chiller control panel to alert operators of occurrences of excessive purging, indicating an abnormal air leak into the chiller. The message and counter display shall be mounted at eye level to be easily monitored.

E. The purge system efficiency shall be less than 0.6 lbs. (1.3 kg) of refrigerant lost per pound of dry air removed at standard condition

2.06 PUMP-OUT SYSTEM (FOR POSITIVE PRESSURE CHILLERS USING HFC-134a)

A. Units operating with HFC-134a shall have the capability of storing the entire refrigerant charge in the condenser, shall be furnished with a portable pump-out system complete with transfer pump, condensing unit and tank constructed in accordance with ASME Code for infired pressure vessels bearing the National Board Stamp.

B. Pump out systems shall be provided by the chiller manufacturer.

2.07 CONTROLS

A. The control unit shall be equipped with a complete microprocessor-based control system, and must be mounted on the chiller package. This system shall consist of temperature and pressure sensors, input/output (I/O) board, and interface board with display and keypad. Boards shall be individually

replaceable for ease of service. All devices shall be factory mounted, wired, and tested.

1. Display Panel or Monitor:

   Provide a DDC microprocessor-based display panel capable of displaying, as a minimum, the following information from the chiller control panel:

   a. Leaving and entering chilled water temperatures
   b. Leaving and entering condenser water temperatures
   c. Evaporator and condenser refrigerant pressures
   d. Oil temperature
   e. Percent motor current
   f. Chiller shutdown codes

   The display panel shall be provided with LCD readout and integral keypad. Operator shall be able to start/stop chiller and reset leaving chilled water temperature via the display panel.

2. Provide all devices, software and programming installed in the control system for the chillers to be capable of communicating with other units or a Building Automation System (BAS).

B. The microprocessor based, fully automatic operating and safety controls shall be chiller mounted in a NEMA 1 rated steel panel enclosure mounted on the unit. Battery backup shall be provided to keep all setpoints in memory for a minimum of one month in case of power failure.

C. The chiller manufacturer shall provide the safety controls listed below and arranged so that any one will shut down the compressor and require manual reset.

1. High refrigerant condenser pressure.
2. Freezestat.
3. Low refrigerant evaporator temperature or pressure.
4. Motor overload.
5. Phase failure.
6. Phase reversal.
7. Momentary power interruption.
8. Low differential pressure between evaporator and condenser.

D. The chiller manufacturer shall provide the following safety controls arranged so that any one will shut down the compressor and automatically reset:

1. Low chilled water temperature.

2. Low oil pressure switch.

E. The chiller manufacturer shall provide the devices or functions listed below on the chiller control panel face or on the chiller controller electronic display panel:

1. Machine off-auto switch.
2. Machine selector switch to allow load, unload, hold or automatic operation.
3. Indication of individual compressor on-off status.
4. Indication that machine is in operation.
5. Condenser pressure (gauge or electronic display).
6. Evaporator pressure (gauge or electronic display).
7. Oil pressure satisfactory.
8. Purge drum pressure if applicable (gauge or electronic display).
9. Purge pump operation indication if applicable.
10. Purge pump switch, if applicable; manual-off-auto settings.
11. Purge oil separator heater operation indication if applicable.
12. Purge oil separator heater switch if applicable; manual-off-auto settings.
13. Leaving chilled water low temperature trip indication.
14. Evaporator low pressure trip indication.
15. Condenser high pressure trip indication.
16. Demand limit setting.
17. Entering and leaving chilled water temperature.
18. Entering and leaving condenser water temperature.
19. Evaporator and condenser refrigerant pressures.

F. The chiller shall be provided with the following operating controls:

1. Solid state, chilled water temperature controller which controls the compressor capacity control device within control band setting of 0.5 to 2.0 degrees F and features adjustable load rate. Locate temperature sensor in leaving chilled water.
2. The chiller controller shall prevent motor overheating due to short cycling.
3. Demand limit device to manually set maximum current in 0.1% increments between 40 percent and 100 percent of full load amperes.

G. Building Automation System Monitoring Interface

1. Provide one set of normally-closed dedicated contacts on a numbered terminal strip, a 4-20 mA or 2-10V signal to monitor and/or control the following points:

a. Chiller energized and ready to accept start status
b. Chiller has failed or failed to start status
c. External start/stop command
d. Running status: Normal operation
e. Running status: Current limit operation
f. External chilled water temperature set point command (2-10 volt)
g. External chilled current limit set point command (2-10 volt)
h. Chiller amperage (4-20 mA)
I. Chiller kilowatts (4-20 mA)

2.08 STARTER

A. Combination disconnect and motor starter listed or labeled by any nationally recognized testing laboratory (NRTL); solid-state type, 480 Volt/3-phase/60 HZ with a minimum interrupting capacity of 30,000 amps rms symmetrical, Disconnect shall be capable of being padlocked from the outside.

B. Starter shall be in unit-mounted NEMA Type 1 enclosure with a hinged door and locking type retaining latches.

C. Starter shall be a wye-delta, closed transition, reduced voltage starter which shall limit inrush current to 0.33 times the full voltage locked rotor current rating of the motor.

D. Starter shall be manufactured in accordance with chiller manufacturer's commercial standards and the following requirements. The enclosure shall be designed for convenient cable entry with front access. The door shall accommodate a padlock. The chiller manufacturer shall mount the following devices within the enclosure or on the chiller control panel:

1. Non fusible/service disconnect.
2. Ground fault protection.
3. Pilot relays to start and stop compressor on signal from chiller control panel.
4. Electronic overload provides overload protection, protects compressor motor from distribution system irregularities, and provides motor current signal to chiller capacity control module.
5. Control power transformer.
6. Control circuits for oil heaters.
7. Contactor interlocks for communication between starter and control panel.
8. Capacitors, one per phase, to correct power factor to minimum 95 percent.

9. Fused or circuit breaker disconnect and starter for oil pump, if applicable.
10. Relay for remote mounted emergency shut-down switch.
11. Overload trip indicator and reset.

E. The chiller manufacturer shall provide the following devices on the starter door or control panel:

1. Starter fault trip indicator and reset.
2. Distribution fault trip indicator and reset.
3. Ammeter, with phase selector switch.
4. Voltmeter, with phase selector switch.

F. The starter shall be tested per this specification.

2.09 OPERATING CHARACTERISTICS

The unit shall be capable of starting up with 90°F (32.2°C) entering water temperature to the evaporator, and operating with 60°F (15.5°C) entering condenser water temperature. The unit shall have a freeze-up thermostat to shut off the compressor if evaporator water temperature falls to 36°F (2.2°C). Such setting shall be adjustable.

2.10 SOUND TEST REQUIREMENTS

The chiller shall be sound tested in accordance with ARI Standard 575 at the factory prior to shipment and the sound pressure level shall not exceed 90 decibels (dB), A weighted (dBA).

2.11 REFRIGERANT MONITORING SYSTEM

A. Provide a refrigerant monitor/sensor system to be included as part of the chiller and chiller controls as follows:

1. Provide monitor/sensor which shall be reset to zero at least every six minutes. This unit shall be capable of sensing HCFC-123 at or below 0.1 ppm or, for other refrigerants, capable of sensing down to 1 ppm. Chiller monitor/sensor panel shall have adjustable alarm set-points. The refrigerant monitor shall be compound-specific and automatically zeroed periodically by drawing air from an incontaiminated air source.

2. Monitor/sensor shall have a visual and audible alarm; only the audible alarm shall be capable of being silenced or cleared manually. Two sets of dry 120 VAC contacts shall be provided for future use.

3. Mount panel and sensors as recommended by manufacturer and as approved by the SDR.

2.12 VIBRATION

The chiller manufacturer shall ensure that the unit is designed and manufactured to operate at vibration levels which will provide satisfactory operation for the design life of the unit, given that a complete maintenance program will be implemented by Sandia in accordance with the manufacturer's recommendations. Using a constant velocity criterion, the chiller shall not exceed 0.5 in./s as measured on the bearing or compressor housing. The maximum allowable vibration peak-to-peak displacement at this vibration level for motor operating speeds of 1,800 RPM and 3,600 RPM, shall not exceed 2 mil and 1 mil, respectively. A vibration test shall be performed in accordance with this specification and a test report shall be submitted to the SDR.

2.13 MATERIALS

All materials used in the fabrication and assembly of the equipment shall be new.

2.14 FINISHES AND PAINTING

Unit shall be designed for maximum corrosion protection with all panels being of heavy gauge, UL 90 approved galvanized or painted steel construction. Fans shall be aluminum or coated steel to resist corrosion.

PART 3 - EXECUTION

3.01 CHILLER EFFICIENCIES AND RATINGS

A. Energy Efficiency Criteria

Chillers subject to this Specification must have an efficiency equal to or better than either the Full Load or Integrated Part Load Value (IPLV) efficiencies listed in the table below (ARI Standard 550 standard conditions).

TABLE 3.16
MINIMUM EFFICIENCIES AT ARI STANDARD CONDITIONS

CHILLER SIZE RANGE	FULL LOAD KW/TON	IPLV KW/TON
CENTRIFUGAL CHILLERS UP TO 1600 TONS	0.60	0.56

3.02 EXAMINATIONS AND TESTS

A. Acceptance Test

The chiller manufacturer shall conduct a factory performance test using the chiller's integral control system at two test points in accordance with the following:

1. One test point shall be at full load, with condenser and evaporator water temperatures and flows specified in the CDF.

2. A second test point shall be specified by the SDR at the start of the acceptance test. Test conditions shall be per the chiller manufacturer's computer selection calculations.

3. Test data and test operation shall be in accordance with ARI Standard 550, Sections A6-A8. ARI Standard 550 tolerances shall apply.

4. For remedies in the event that the chiller acceptance test shows that either test point is not met, see Section 1.3.

5. This acceptance test shall be included at no additional cost to Sandia.

6. Witness Test

   a. The chiller manufacturer shall allow the SDR to witness the tests specified. The contractor shall notify the SDR ten (10) working days prior to the scheduled testing date. The SDR will then notify the contractor within five (5) days whether the SDR will witness the test.

   b. Vendor costs for witnessing tests shall be included in the chiller base price. The SDR shall be responsible for their travel and living expenses.

7. Certified Test Report

A certified copy of the test results shall be overnight mailed to the SDR within five (5) working days of completion of the acceptance tests.

B. Testing of Motor Starter

Testing of the motor starter shall be included at no additional cost to Sandia. The starter may be factory tested with the chiller.

C. Functionality Test

As part of the acceptance test the chiller will be operationally tested by the manufacturer to ensure all systems function to provide a complete, working system to Sandia.

D. Vibration Testing

The chiller manufacturer shall perform vibration testing of the unit in accordance with the "ASHRAE Handbook - HVAC Systems and Applications." The unit shall be factory tested using standard Vendor operating procedures to show that vibration levels meet the requirements of Section 2.12 . A certified copy of the test results shall be overnight mailed within five (5) working days of completion to Sandia.

3.03 PREPARATION FOR SHIPMENT

A. Tagging

The chiller manufacturer shall provide nameplates and equipment markings attached to the equipment in accordance with standard commercial procedures.

B. Cleaning

1. Internal and external parts of the equipment shall be cleaned in accordance with the standards under the chiller manufacturer’s Quality Assurance Program (QAP).

2. Cleaning operations shall be performed after all of the manufacturing
is complete. Following cleaning, the equipment shall be sealed and

packaged.

C. Packaging and Shipping

All equipment shall be prepared for shipment in accordance with standards and procedures under the chiller manufacturer's QAP.

D. Handling

The chiller manufacturer shall handle the equipment at all stages of the manufacturing process so as to prevent damage. The Vendor shall provide to Sandia any applicable special handling instructions over and above the standard commercial rigging information shown on Vendor documents, in order to facilitate Sandia's handling of the equipment subsequent to its delivery to the site.

E. Storage

To provide Sandia with equipment in a corrosion-free state, the contractor shall furnish instructions for storage and maintenance of the equipment prior to installation as well as for the period between completion of installation and the time the equipment is placed in service.

3.04 VERIFICATION OF CONDITIONS

A. Examine areas and conditions under which chillers are to be installed. Do not proceed with work until unsatisfactory conditions have been corrected.

3.05 INSTALLATION

A. General: Install in accordance with manufacturer's installation instructions, plumb and level, firmly anchored to vibration isolators. Maintain manufacturer's recommended clearances.

B. Chilled Water Piping: Provide per Section 15510. Connect inlet to evaporator with controller bulb well, shutoff valve, thermometer, strainer, flow switch, flexible pipe connector, pressure gauge, union or flange. Connect outlet to evaporator with shutoff valve, balancing cock, thermometer, flexible pipe connection, pressure gauge, and union or flange. Provide drain valves and vent cocks for each water box.

C. Condenser Water Piping: Provide per Section 15510. Provide flanged or union connections to condenser, arranged to allow removal of condenser heads. Connect inlet to condenser with shutoff valve, thermometer, plugged tee, pressure gauge, flexible pipe connector, and union or flange. Connect outlet to condenser with shutoff valve, thermometer, drain line

and shutoff valve, strainer, plugged tee, flexible pipe connector, and union or flange. Provide drain valves and vent cocks for each water box.

D. Relief Piping: Provide relief piping as indicated from refrigerant pressure relief rupture disc on chiller to atmosphere. Provide size as recommended by chiller manufacturer, and terminate with gooseneck facing down.

E. Controls: Furnish field-installed automatic temperature control requirements as indicated and per Section 15950.

F. Manufacturer's Supervision: Chiller manufacturer shall supervise field assembly (if any) and installation of chiller work, with factory-trained technical service representative. Prepare manufacturer's written report of installation, signed by representative.

1. Include leak testing, evacuation, dehydration, vacuum pumping, and charging in scope of supervision by manufacturer's representative.

2. Include lubrication, including filling of reservoirs, and confirming that lubricant is of quantity and type recommended by manufacturer in scope of supervision by manufacturer's representative.

3. Paint damaged and abraded factory finish with touch-up paint matching factory finish.

4. Grounding: Provide positive electrical equipment ground for chiller equipment and components where indicated.

SECTION 15681

WATER COOLED CHILLERS
(RECIPROCATING OR SCROLL)

PART 1 - GENERAL

1.01 RELATED DOCUMENTS

A. Drawings and general provisions of Contract, including General and Supplementary Conditions and Division 1 Specification sections, apply to work of this section as if repeated herein.

1.02 DESCRIPTION

A. The extent of chiller work is indicated by drawings and schedules, and by the requirements of this section. Each unit shall include compressor, compressor motor, evaporator, condenser, controls and panel including gauges and indicating lights, auxiliary components and accessories.

B. Compliance with Standards.

1. Ratings: Rate chiller in accordance with latest version of ARI 590

2. Safety: Comply with ANSI/ASHRAE 15, Safety Code for Mechanical Refrigeration.

3. UL Labels: Provide chiller electrical components which have been listed and labeled by Underwriters Laboratories.

4. NEMA Compliance: Comply with applicable portions of National Electrical Manufacturers Association Standards pertaining to chiller motors and motor energy management.

5. Standards for Design, Fabrication and Installation: Except as otherwise indicated, comply with the following:

a. ASME Boiler and Pressure Vessel Code, Section 8, Div. I. Provide ASME stamp on chiller showing compliance with ASME Code.

b. ANSI B31.1, Power Piping Code.

c. National Electrical Code (NFPA No. 70).

1.03 SUBMITTALS

A. Submit manufacturer's data on chillers, including certified drawings showing overall dimensions of complete assembly, capacity and ratings, operating weights, foundation requirements, sizes and locations of connections, accessories, auxiliary support requirements, and parts lists.

B. Submit wiring diagrams showing electric service for chiller electrical components, safety devices and indicator lights.

C. Submit operating and maintenance instructions for incorporation in operating and maintenance manual per Section 15010: "BASIC MECHANICAL REQUIREMENTS".

1.04 TOOLS

A. Provide tool kit, including manufacturer's special tools and non- standard wrenches required for servicing chiller.

PART 2 - PRODUCTS

2.01 RECIPROCATING *(SCROLL)* CHILLERS

A. Provide reciprocating [scroll] water chiller, with capacity of at least []tons ([]-kW) refrigeration when delivering []gpm ([]L/s) of chilled water at []_F ([]_C) when supplied with []gpm ([]L/s) of condensing water at []_F ([]_C), with fouling factor of not less than 0.0005 for evaporator and condenser, and power input of []kW. Pressure loss through evaporator shall be not more than []ft water head ([]kPa) and pressure loss through condenser shall be not more than []ft water head ([]kPa).

B. Provide semi-hermetic reciprocating compressors with heat-treated forged steel or ductile-iron shafts, aluminum-alloy connecting rods, automotive-type pistons, rings to prevent gas leakage, suction and discharge valves, and sealing surfaces immersed in oil.

B. Provide hermetic direct-drive scroll compressors, with fixed compression, and integral centrifugal oil pump, and check valve on the scroll discharge port.

C. Statically and dynamically balance rotating parts.

D. Provide reversible oil-pump lubrication system arranged to ensure adequate lubrication during starting, stopping, and normal operation.

E. Provide compressor with automatic capacity-reduction equipment consisting of suction-valve unloaders. Use lifting mechanism operated by *[oil pressure] [gas-discharge pressure] [solenoid valve]*. Provide unloaded compressor start.

F. Provide constant speed, *[3600] []*-rpm compressor motor, suction-gas cooled, with overheating protection *[full] [reduced]*-voltage starting. Supply complete with starter.

G. Provide thermostatically-controlled crankcase heater to evaporate refrigerant returning to crankcase during shut down. Energize heater *[continuously.] [when compressor is not operating.]*

H. Provide a hot-gas muffler in the discharge of each compressor.

I. Fabricate evaporator *[and condenser]* as shell-and-tube type, seamless or welded steel construction with cast iron or steel heads, and copper or red-brass tubes with integral fins, rolled or silver brazed into tube sheets.

J. Provide intermediate tube supports between tube sheets spaced not more than 900 mm *(3 ft)* apart.

K. Design water side for 1035 kPa *(150-psi)* gauge working pressure, and test at not less than 1.5 times maximum working pressure.

L. Design refrigerant side for 2070 kPa *(300-psi)* gauge working pressure, and test at not less than 1.5 times maximum working pressure.

J. The packaged chiller shall be equipped with microcomputer control The control shall provide for compressor staging based on leaving water temperature and maintain equal loading of multiple compressors throughout the full range of operation. It shall provide for high and low pressure protection, cooler water freeze protection, motor load control (demand limiter) based on amp draw. Anti-recycle protection and low oil level protection shall also be provided. The computer shall have a keyboard accessed Light Emitting Diode readout capable of continuously updating cooler leaving water temperature, cooler and condenser pressure, power supply volts and single phase amps for each compressor. The computer shall be complete with all hardware/software necessary to enable remote monitoring of this data through the addition of only a simple, optional, phone modem.

K. The electrical control panel shall be wired to permit fully automatic operations during initial start-up, normal operations and shutdown conditions. The control system shall contain the following control and safety devices:

1. Manual Controls: Control circuit stop and start switches

2. Safety Controls:

    a. Solid state compressor motor starter
    b. Overloads (3 leg)
    c. Low oil level float switches
    d. High oil temperature thermostats
    e. High condenser pressure transducer
    f. Low evaporator pressure transducer
    g. Compressor motor winding thermostats
    h. Chiller water flow switch terminals
    i. Undervoltage/phase failure protection
    j. Circuit breakers on each compressor
    k. Condenser water flow switch terminals

3. Automatic Controls:

    a. Compressor motor increment contactors
    b. Increment start timer
    c. Anti-recycle timer
    d. Oil sump heater interlock relays

4. Refrigerant Controls:

    a. Finite refrigerant motorized refrigerant valves
    b. Liquid refrigerant level sensor in cooler
    c. Compressor load solenoid valves
    d. Compressor unload solenoid valves

5. Indicator Lights:

    a. Power on
    b. Low oil
    c. High pressure safety
    d. Low pressure safety
    e. Compressor high motor temperature
    f. Compressor anti-recycle
    g. Compressor motor overloads

L. The control system shall be provided with an anti-recycle device. The control shall limit compressor starting to a minimum of 15 minutes between starts.

M. The packaged chiller shall be furnished with unit mounted reduced inrush starting system for each compressor. The starters shall be factory mounted and wired, with individual circuit breakers for each compressor. The starter shall be wired so that the only field electrical connection to the packaged chiller shall be to a single three-phase power terminal. This includes all appurtenances necessary for unit

operation including, but not limited to, the control accessories and oil pump or pumps, if required.

N. Sound Control: Chiller unit shall have an acoustical enclosure for sound control. Sound power level shall not exceed 85 dba at 6 feet from unit.

PART 3 - EXECUTION

3.01 INSTALLATION AND START-UP

A. The Contractor shall:

1. Connect all water piping so that unit and water circuits are serviceable.

2. Install thermometer test wells in water piping adjacent to inlet and outlet connections of both evaporator and condenser.

3. Insulate evaporator and any other portions of machine required to prevent sweating under normal operating conditions.

4. The contractor shall furnish and install all necessary piping external to unit for control system.

5. Relief vents for freon system shall be piped to outside of building.

B. Startup:

1. The manufacturer shall furnish sufficient refrigerant or dry nitrogen for pressure testing by manufacturer's representative.

2. The manufacturer shall furnish a factory-trained representative without charge for five working days for one unit, plus three working days for each additional unit. Representative shall supervise leak testing, evacuation and dehydration using a vacuum pump furnished by the manufacturer, charging the unit, start-up, and instruction of Sandia personnel on operation and maintenance. Manufacturer shall provide operation instructions and parts list.

3. Submit start-up report and performance logs to Sandia.

END OF SECTION

SECTION 15684

ROTARY SCREW CHILLERS

PART 1 - GENERAL

1.01 RELATED DOCUMENTS

A. Drawings and general provisions of Contract, including General and Supplementary Conditions and Division 1 Specification sections, apply to work of this section as if repeated herein.

1.02 DESCRIPTION

A. The extent of rotary screw chiller work is indicated by drawings and schedules, and by the requirements of this section. Each unit shall include rotary screw compressor, compressor motor, evaporator, condenser, controls and panel including gauges and indicating lights, auxiliary components and accessories.

B. Compliance with Standards.

1. Ratings: Rate chiller in accordance with latest version of ARI 550-88.

2. Safety: Comply with ANSI/ASHRAE 15, Safety Code for Mechanical Refrigeration.

3. UL Labels: Provide chiller electrical components which have been listed and labeled by Underwriters Laboratories.

4. NEMA Compliance: Comply with applicable portions of National Electrical Manufacturers Association Standards pertaining to chiller motors and motor energy management.

5. Standards for Design, Fabrication and Installation: Except as otherwise indicated, comply with the following:

a. ASME Boiler and Pressure Vessel Code, Section 8, Div. I. Provide ASME stamp on chiller showing compliance with ASME Code.

b. ANSI B31.1, Power Piping Code.

c. National Electrical Code (NFPA No. 70).

1.03 SUBMITTALS

A. Submit manufacturer's data on rotary screw chillers, including certified drawings showing overall dimensions of complete assembly, capacity and ratings, operating weights, foundation requirements, sizes and locations of connections, accessories, auxiliary support requirements, and parts lists.

B. Submit wiring diagrams showing electric service for chiller electrical components, safety devices and indicator lights.

C. Submit operating and maintenance instructions for incorporation in operating and maintenance manual per Section 15010: "BASIC MECHANICAL REQUIREMENTS".

1.04 TOOLS

A. Provide tool kit, including manufacturer's special tools and non- standard wrenches required for servicing chiller.

PART 2 - PRODUCTS

2.01 ROTARY SCREW CHILLERS

A. The contractor shall in accordance with the plans, furnish and install packaged liquid chillers. The units shall be completely factory packaged including vertical screw compressors, unit mounted compressor motor starter, cooler, condenser and microcomputer control center. The packaged chiller shall be factory assembled, charged and tested with a full operating refrigerant and oil charge. The refrigerant type shall be R-22 only, no other refrigerant may be used for environmental reasons.

B. Capacity of each chiller shall not be less than scheduled refrigeration kw output *(tons)* and cooling flow of water. Power input requirements for the units, incorporating all appurtenances necessary for unit operation, including but not limited to the control accessories and oil pumps, if required, shall not exceed scheduled kW input at design conditions. The units shall have an ARI integrated Part-Load Value (IPLV) that does not exceed scheduled value when calculated at the above conditions per ARI standard 550-88. The unit shall be able to unload to 12% of cooling (refrigeration) capacity when operating with leaving chilled water and entering condenser water at full load design temperatures. The unit shall be capable of continuous operation at this point, with stable compressor operation, without the use of hot gas bypass.

C. Heat transfer surfaces shall be selected to reflect the incorporation of a fouling factor of .00025 hr.sq.ft ^{O}F/BTU for the water cooler and condenser. Water pressure drop at design conditions shall not exceed scheduled PSI through the condenser and through the water cooler.

D. The packaged chiller shall be furnished with single-stage direct connected positive displacement rotary screw compressors as required, of the oil injected type, driven by 3500 RPM motors. Refrigerant type shall be R22. Each compressor shall include an integral oil separation system, oil sump and oil filter. The oil temperature shall be controlled during operation to maintain proper oil temperatures throughout the lubrication system. An electric oil heater shall be supplied with each compressor to maintain oil temperature during shutdown period. Each compressor shall have a suction check valve, suction filter, suction service valve and a discharge check valve. Compressor capacity control shall be obtained by an electrically initiated, hydraulically actuated slide valve within each compressor housing.

E. Evaporation and condenser shall be of shell and tube construction. Removable compact water boxes with stubout water connections having Victaulic grooves shall be provided to permit access for tube cleaning and replacement. The evaporator tubes shall be copper. Water velocity through evaporator and condenser tubes shall not exceed 3 m/s *(10 feet per second)*. The evaporator, condenser and water boxes shall be designed for 1035 kpa *(150 PSIG)* working pressure. Shells shall be designed for a working pressure on the refrigerant side suitable for the refrigerant being used, and ASME Code constructed and stamped, as applicable. Cooler shall contain integral mist eliminators to prevent carryover of liquid refrigerant into the compressor suction. Relief devices shall be provided for the refrigerant side, in accordance with ANSI B9.1 Safety Code (and local codes). Those vessels containing 454 l *(120 gallons)* or more on the waterside (including both water boxes and tubes shall be built and stamped in accordance with ASME standards under Section VIII, Division 1.

1. Condenser tubes shall be 90/10 Cupro-nickel.

2. Condenser and evaporator tubes shall have smooth interior surface. Internal tube enhancement, i.e., fins, spires, corrugations, etc. shall not be used.

3. Epoxy coating shall be factory applied to tube sheets and interior surface of water boxes on both chiller and condenser. Epoxy shall be applied in two coats completely covering surfaces exposed to water.

4. Each unit shall be factory insulated with anti-sweat flexible closed cell plastic type insulation. Insulation shall be applied to the cooler with minimum thickness of 20 mm *(3/4 inch)*. The same type insulation shall be applied to compressor suction piping and other refrigerant piping as necessary.

F. The flooded cooler shall be fitted with an oil recovery system. The oil recovery system will insure that the cooler is operating at peak efficiency at all times and provide optimal energy efficiency during extended periods of part load. Units without oil recovery systems mounted on the evaporator will not be acceptable.

G. To maximize energy efficiency, the packaged chiller shall be equipped with a flash economizer cycle and multiple refrigerant expansion devices. Refrigerant vapor from the flash economizer shall be fed back into an intermediate compressor stage, reducing the enthalpy of the refrigerant and increasing the net refrigeration effect of the cooler.

H. The packaged chiller shall be furnished with a finite refrigerant control system to optimize part-load chiller efficiency. The finite refrigerant control system will prevent the flow of efficiency robbing refrigerant vapor in the condenser from entering the flash economizer or cooler at reduced load by directly modulating motorized refrigerant valves. Fixed orifice control systems will not be acceptable.

I. The packaged chiller shall be equipped with microcomputer control The control shall provide for compressor staging based on leaving water temperature and maintain equal loading of multiple compressors throughout the full range of operation. It shall provide for high and low pressure protection, cooler water freeze protection, motor load control (demand limiter) based on amp draw. Anti-recycle protection and low oil level protection shall also be provided. The computer shall have a keyboard accessed Light Emitting Diode readout capable of continuously updating cooler leaving water temperature, cooler and condenser pressure, power supply volts and single phase amps for each compressor. The computer shall be complete with all hardware/software necessary to enable remote monitoring of this data through the addition of only a simple, optional, phone modem.

J. The electrical control panel shall be wired to permit fully automatic operations during initial start-up, normal operations and shutdown conditions. The control system shall contain the following control and safety devices:

1. Manual Controls: Control circuit stop and start switches

2. Safety Controls:

    a. Solid state compressor motor starter
    b. Overloads (3 leg)
    c. Low oil level float switches
    d. High oil temperature thermostats
    e. High condenser pressure transducer
    f. Low evaporator pressure transducer
    g. Compressor motor winding thermostats
    h. Chiller water flow switch terminals
    i. Undervoltage/phase failure protection
    j. Circuit breakers on each compressor
    k. Condenser water flow switch terminals

3. Automatic Controls:

a. Compressor motor increment contactors
b. Increment start timer
c. Anti-recycle timer
d. Oil sump heater interlock relays

4. Refrigerant Controls:

a. Finite refrigerant motorized refrigerant valves
b. Liquid refrigerant level sensor in cooler
c. Compressor load solenoid valves
d. Compressor unload solenoid valves

5. Indicator Lights:

a. Power on
b. Low oil
c. High pressure safety
d. Low pressure safety
e. Compressor high motor temperature
f. Compressor anti-recycle
g. Compressor motor overloads

K. The control system shall be provided with an anti-recycle device. The control shall limit compressor starting to a minimum of 15 minutes between starts.

L. The packaged chiller shall be furnished with unit mounted reduced inrush starting system for each compressor. The starters shall be factory mounted and wired, with individual circuit breakers for each compressor. The starter shall be wired so that the only field electrical connection to the packaged chiller shall be to a single three-phase power terminal. This includes all appurtenances necessary for unit operation including, but not limited to, the control accessories and oil pump or pumps, if required.

M. Sound Control: Chiller unit shall have an acoustical enclosure for sound control. Sound power level shall not exceed 85 dba at 2m *(6 feet)* from unit.

PART 3 - EXECUTION

3.01 INSTALLATION AND START-UP

A. The Contractor shall:

1. Connect all water piping so that unit and water circuits are serviceable.

2. Install thermometer test wells in water piping adjacent to inlet and outlet connections of both evaporator and condenser.

3. Insulate evaporator and any other portions of machine required to prevent sweating under normal operating conditions.

4. The contractor shall furnish and install all necessary piping external to unit for control system.

5. Relief vents for freon system shall be piped to outside of building.

B. Startup:

1. The manufacturer shall furnish sufficient refrigerant or dry nitrogen for pressure testing by manufacturer's representative.

2. The manufacturer shall furnish a factory-trained representative without charge for five working days for one unit, plus three working days for each additional unit. Representative shall supervise leak testing, evacuation and dehydration using a vacuum pump furnished by the manufacturer, charging the unit, start-up, and instruction of Sandia personnel on operation and maintenance. Manufacturer shall provide operation instructions and parts list.

3. Submit start-up report and performance logs to Sandia.

END OF SECTION

SECTION 15685

CENTRIFUGAL AND ROTARY SCREW FLUID CHILLERS

PART 1 GENERAL

1.01 RELATED DOCUMENTS

A. Drawings and general provisions of the Contract, including General conditions, Supplementary General Conditions, and Division 1 - General Requirements, apply to the work specified in this section.

B. Related work included in Section 15010 - Mechanical General Provisions and under other sections of the specifications is hereby made a part of this section and shall be referred to by the contractors and the equipment manufacturers.

C. Where a conflict occurs between this section and Section 15010 - Mechanical General Provisions, the technical section of the specification shall take precedence.

1.02 SUMMARY

A. The work includes, but shall not be limited to, providing labor, material, and services necessary to provide the water chillers as shown on the drawings and described in the specifications in a serviceable and fully operational manner. Chillers are Sandia furnished Contractor installed.

B. The work includes, but is not limited to, providing the following:

1. Charge of refrigerant and oil.
2. Start-up service.
3. DDC chiller controls.

1.03 REFERENCES

A. ANSI/ASHRAE 15 - Safety Code for Mechanical Refrigeration.

B. ANSI/ASHRAE 90A - Energy Conservation in New Building Design.

C. ANSI/ASME SEC 8 - Boiler and Pressure Vessel Code.

D. ARI 550 - Centrifugal or Rotary Water - Chilling Packages.

1.04 SUBMITTAL

A. General:

1. Submittal shall conform to the requirements of Section 01300 - Submittal, under provisions of Section 15010 and the outline below.

2. Field Mounted Instruments

3. Documentation

B. Submit the following material for each indexed section:

1. Submit drawings indicating components, assembly, dimensions, weights and loading, required clearances, and location and size of field connections. Indicate equipment, piping and connections, valves, and strainers required for complete system.

2. Submit product data indicating rated capacities, weights, specialties and accessories, electrical requirements and wiring diagrams.

C. Submit manufacturer's installation instructions.

D. Recommended spare parts and expendables.

E. Operation and maintenance data:

1. Documentation for Each Indexed Section.

2. Operating and Maintenance Manuals.

3. Record Drawings.

1.05 VERIFICATION OF CAPACITY AND EFFICIENCY

A. Refer to Sandia furnished chillers

1.06 HANDLING AND EQUIPMENT ROOM REQUIREMENTS

A. Comply with manufacturer's installation instructions for rigging, unloading, and transporting units.

B. Protect units from physical damage. Leave factory shipping covers in place until installation.

1.07 DELIVERY, STORAGE, AND HANDLING

A. Deliver products to the site under the provisions of Section 01600.

B. Store and protect products under the provisions of Section 01600.

C. Comply with the manufacturer's installation instructions for rigging, unloading, and transporting the units.

D. Protect the units from physical damage. Leave factory shipping covers in place until installation.

1.08 WARRANTY

A. Provide two year warranty of installation from date of owner acceptance.

PART 2 PRODUCTS

2.01 ACCEPTABLE MANUFACTURERS

A. Chillers are Sandia furnished Contractor installed.

2.02 SEQUENCE OF OPERATION

A. General :

1. If the local control panel's panel/remote switch is indexed to the panel position the chiller shall be started locally.

2. If the switch is indexed to the remote position the microprocessor shall be indexed on by remote contact closures from a FID.

3. When the microprocessor receives an input to start, the controller shall perform a series of pre-start checks to verify that all safeties are within safety limits.

4. Once the checks are successfully completed, the evaporator pump(s) shall be energized and after a time delay the condenser pump(s) shall be energized. Manual starting shall also be possible.

5. The controller shall verify the flows before energizing the oil pump.

6. If the chilled water, condenser water, or oil pump status is not confirmed the microprocessor shall abort the start-up and activate a visual and audible alarm.

7. The microprocessor shall start the compressor and monitor the motor acceleration time and starter transition time.

8. If excessive, the start shall be aborted and alarmed.

9. The microprocessor shall soft-load the compressor in a pre-programmed gradual manner to avoid power demand spikes.

B. Capacity control:

1. The operating capacity of each chiller shall be matched directly with the need for cooling.

2. As cooling needs change the guide vanes shall be repositioned to maintain the desired chilled water temperature.

3. The changes in vanes position shall be initiated by a thermistor located in the leaving chilled water nozzle.

4. This sensor shall relay any variations in water temperature to the microprocessor.

5. The microprocessor shall cause the guide vane actuator to adjust the guide vane position as required.

6. If the temperature drops below the selected design temperature by more then the dead band the actuator shall be directed to a closed position.

7. A rise in chilled water temperature above the setpoint plus dead band shall cause the actuator to move towards the open position.

C. Capacity Override:

1. The refrigerant low temperature and motor current demand limit shall include two steps of override control.

2. The first step shall inhibit the guide vanes from opening further and the second step shall drive the actuator closed until the condition is below the override setpoint.

3. If either condition reaches its trip point the microprocessor shall initiate a safety shutdown.

4. Automatic override shall be initiated whenever the microprocessor receives a signal to invoke power limits.

D. Shutdown:

1. The chiller shall be stopped by the local microprocessor or local stop switch.

2. When the microprocessor receives a signal to shutdown, the internal stop-to-stop inhibit timer shall be initialized, guide vanes shall close, and after a time delay the oil, condenser, chilled water pumps and cooling tower fan outputs shall be de-energized if power to the compressor remains off.

E. Recycle Shutdown:

1. The microprocessor shall automatically initiate a recycle shutdown whenever the chilled water is more than five degrees below the setpoint or within three degrees of the low refrigerant temperature setpoint, or when called for by EMCS.

2. The recycle shutdown shall be identical to a manual shutdown with the exception of not de-energizing the chilled water pumps.

F. Recycle Start-up:

1. A recycle start-up shall be initiated by the microprocessor following a recycle shutdown when the leaving chilled water supply temperature has risen above the dead band and the internal start inhibitors have expired, or when called for by EMCS.

2. A recycle start-up shall be identical to a normal start-up except a fixed ramp loading rate shall be initiated and the chilled water pumps are not restarted.

G. Safety Shutdown:

1. A safety shutdown shall be identical to a normal shutdown with the exception of generating a visible and audible alarm.

H. Oil Heater:

1. During chiller shutdown the heater shall be energized to maintain a minimum oil temperature to minimize refrigerant absorption by the oil.

2.03 STARTER (HIGH VOLTAGE)

A. Furnished by Sandia. See Division 16.

PART 3 EXECUTION:

3.01 INSTALLATION AND START-UP

A. The contractor shall:

1. Connect all water piping so that unit and water circuits are serviceable.

2. Install thermometer test wells in water piping adjacent to inlet and outlet connections of both evaporator and condenser.

3. Insulate evaporator and any other portions of machine requires to prevent sweating under normal operating conditions.

4. The contractor shall furnish and install all necessary piping external it unit for control systems.

5. Relief vents for freon system shall be piped to outside of building

B. Startup:

1. The manufacturer shall furnish sufficient refrigeration or dry nitrogen for pressure testing by manufacturer's representative.

2. The manufacturer shall furnish a factory trained representative without charge for five working days for one unit, plus three working days for each additional unit. Representative shall supervise leak testing, evacuation and dehydration using a vacuum pump furnished by the manufacturer, charging the unit, start-up, and instruction of Sandia personnel on operation and maintenance. Manufacturer shall provide operation instruction and parts list.

3. Submit start-up report and performance logs to Sandia.

END OF SECTION

SECTION 15686

ABSORPTION WATER CHILLERS

PART 1 - GENERAL

1.01 RELATED DOCUMENTS

A. Drawings and general provisions of Contract, including General and Supplementary Conditions and Division 1 Specification sections, apply to work of this section as if repeated herein.

1.02 DESCRIPTION

A. The extent of chiller work is indicated by drawings and schedules, and by the requirements of this section. Each unit shall include evaporator, condenser, controls and panel including gauges and indicating lights, auxiliary components and accessories.

B. Compliance with Standards.

1. Ratings: Rate chiller in accordance with latest version of ARI 550-88.

2. Safety: Comply with ANSI/ASHRAE 15, Safety Code for Mechanical Refrigeration.

3. UL Labels: Provide chiller electrical components which have been listed and labeled by Underwriters Laboratories.

4. NEMA Compliance: Comply with applicable portions of National Electrical Manufacturers Association Standards pertaining to chiller motors and motor energy management.

5. Standards for Design, Fabrication and Installation: Except as otherwise indicated, comply with the following:

a. ASME Boiler and Pressure Vessel Code, Section 8, Div. I. Provide ASME stamp on chiller showing compliance with ASME Code.

b. ANSI B31.1, Power Piping Code.

c. National Electrical Code (NFPA No. 70).

1.03 SUBMITTALS

A. Submit manufacturer's data on chillers, including certified drawings showing overall dimensions of complete assembly, capacity and ratings, operating weights, foundation requirements, sizes and locations of connections, accessories, auxiliary support requirements, and parts lists.

B. Submit wiring diagrams showing electric service for chiller electrical components, safety devices and indicator lights.

C. Submit operating and maintenance instructions for incorporation in operating and maintenance manual per Section 15010: "BASIC MECHANICAL REQUIREMENTS".

1.04 TOOLS

A. Provide tool kit, including manufacturer's special tools and non- standard wrenches required for servicing chiller.

PART 2 - PRODUCTS

2.01 ABSORPTION WATER CHILLERS

A. Provide absorption water chillers having capacity of at least () kw (tons of refrigeration when delivering () l/s(gpm) of chilled water at () degree C (degree F) and () l/s (gpm) (of hot water at() degree C (degree F)) (of saturated steam at() kpa(psi) and () degree C (degree F)) using a fouling factor of not less than 0.0005 for evaporator and absorber-condenser.

B. Provide self-contained, hermetically sealed, centrifugal solution and refrigerant pumps that are lubricated by lithium-bromide refrigerant.

C. Design pump motor for servicing without breaking machine vacuum.

D. Arrange components in one or two shells of corrosion resistant material. Fabricate absorber and generator of cupro-nickel tubes, and evaporator and condenser of copper tubes rolled or silver brazed to tube sheets. Provide adequate number of support sheets,. Design tubes for individual replacement. Provide removable water boxes of cast iron or welded steel, arranged to permit access to tube bundle.

E. On or near chiller, mount control panel , control transformer, pump motor starter, pump overload protection, low temperature cut out, run lights for unit and pump, indicator lights for purge system safeties, chilled water temperature controller, pneumatic and electric switches, valves, and gauges. Completely prewire and prepipe panel at factory.

F. Provide normally closed pneumatic hot water (steam) control valve.

G. Provide unit complete with solution throttling device to increase part load economy, and to ensure operation to 10% of specified full load capacity at 12.8 degree C (55 degree F) entering condenser water temperature.

H. Provide purge system to automatically or manually purge unit of noncondensables, storing them external of unit so they can not diffuse back into unit.

I. Provide automatic decrystalization using lithium bromide solution.

J. Hot water space of concentrator shall be design for a minimum of 1725 kpa (250 psi) working pressure. Test at 1.5 times maximum working pressure.

J. Steam space of concentrator shall be design for a minimum of 345 kpa (50 psi) working pressure. Test at 1.5 times maximum working pressure.

PART 3 - EXECUTION

3.01 INSTALLATION AND START-UP

A. The Contractor shall:

1. Connect all water piping so that unit and water circuits are serviceable.

2. Install thermometer test wells in water piping adjacent to inlet and outlet connections of both evaporator and condenser.

3. Insulate evaporator and any other portions of machine required to prevent sweating under normal operating conditions.

4. The contractor shall furnish and install all necessary piping external to unit for control system.

5. Relief vents for freon system shall be piped to outside of building.

B. Startup:

1. The manufacturer shall furnish sufficient refrigerant or dry nitrogen for pressure testing by manufacturer's representative.

2. The manufacturer shall furnish a factory-trained representative without charge for five working days for one unit, plus three working days for each additional unit. Representative shall supervise leak testing, evacuation and dehydration using a vacuum pump furnished by the manufacturer, charging the unit,

start-up, and instruction of Sandia personnel on operation and maintenance. Manufacturer shall provide operation instructions and parts list.

3. Submit start-up report and performance logs to Sandia.

END OF SECTION

SECTION 15715

PACKAGED COOLING TOWERS - STEEL

PART 1 - GENERAL

1.01 RELATED DOCUMENTS

A. Drawings and general provisions of Contract, including General and Supplementary Conditions and Division 1 Specification sections, apply to work of this section as if repeated herein.

1.02 DESCRIPTION

A. The extent of cooling tower work is as shown on drawings and in schedules and is hereby defined to include (but not by way of limitation) the furnishing and installing of cells complete with casing, nozzles, drift eliminators, anti-cavitation plate, and accessories, as indicated.

1.03 SUBMITTALS

A. Submit manufacturer's data on cooling towers, including certified drawings showing overall dimensions, operating weights, weight loading, sizes and locations of connections, accessories and support requirements. Submit complete performance data.

PART 2 - PRODUCTS

2.01 PACKAGED COOLING TOWER

A. Provide Marley NC Series 220, or equal, induced draft, vertical discharge, packaged, crossflow-type cooling tower.

B. Capacity: Capacity shall be not less than scheduled on the drawings at the conditions indicated. Fan motor horsepower shall be as scheduled.

C. Casing and Louvers: Casing shall be heavy mill galvanized steel sheets installed vertically with U-edge and flange. Provide removable screens over air inlets.

D. Hardware and Finish: All bolts, nuts and washers shall be galvanized steel. All steel used in the construction of the cooling tower shall be galvanized. Standard coating shall be 7.4E-5 m^3 per 0.3 m^2 *(2-1/2 oz. per square foot)*.

E. Distribution Basin: Open gravity-type distribution basin using plastic diffusing-type metering orifices shall be provided. Provide basin covers.

F. Flow Control Valves: Provide flow control valve at each inlet to distribution basin.

G. Mechanical Equipment: The fan shall be of the propeller type with cast aluminum blades. Each blade shall be adjustable and individually attached to an aluminum hub. Fan drive shall be through Series 60 Twinflex drive shaft (tubular stainless steel shaft with rubber bushed yokes) and connected to a right-angle Gear reducer. External fill lines for the Gear reducer shall be provided. Motor shall be mounted outside the moist air stream. Motor shall be energy efficient type.

H. Collection Basin: Cold water collection basin floor and sides shall be bolted, heavy mill galvanized steel. Basin shall be self-cleaning and complete with depressed center section, cleanout and drain fitting, side outlet suction with screen and anti-cavitation device, and float-activated make-up valve. The basin shall be designed to support the tower when resting on only two grillage beams.

I. Fill, louvers and Drift Eliminators: Fill, louvers and drift eliminator material shall be noncorrosive and nonferrous. Fill shall consist of vertical sheets of polyvinyl chloride with three-pass, integral eliminators. Drift loss shall be limited to 0.2% of the water circulated. Louvers shall be integral with fill.

J. Access and Safety: Access panels shall be provided on both end-walls for access to the eliminator and plenum section. A heavy gauge, galvanized wire, grill type fan guard shall be provided over each fan cylinder. Provide ladder with extension for access to top of tower. Provide handrail and toe rail around perimeter of tower.

K. Vibration Limit Switch: Provide vibration limit switch mounted on fan deck, Marley Series M-1 or equal .

L. Provide flume with weir gate to connect the basins together and allow isolation between towers.

M. Cooling Tower construction and installation shall be suitable for roof mounting in Seismic Zone 4.

PART 3 - EXECUTION

3.01 INSTALLATION

A. Comply with cooling tower manufacturer's instructions for installation.

B. Install flow-control and float valves.

C. Balance equalizer lines between multiple towers.

D. Adjust temperature controls and verify operation.

E. Pipe blowdown and drain lines to sanitary drain.

3.02 START-UP

A. Clean the tower thoroughly. Comply with manufacturer's instructions for filling and start-up of operation, but not less than the following:

1. Adjust water-load control for proper operating level.

3.03 TESTING AND ADJUSTING

A. Manufacturer's representative shall inspect tower after installation is complete and shall submit a written report to contractor prior to start-up, verifying that installation is in accordance with specifications and manufacturer's instructions. One(1) copy of said report shall be given to the SDR prior to start-up

B. Performance Test: Test each cooling tower to show that it will operate in accordance with the indicated performance requirements. Provide copy of test to Sandia Delegated Representative.

C. Conduct the test in accordance with the ASME Power Test Code PTC- 23, 1986.

*****

SECTION 15716

PACKAGED COOLING TOWERS - STEEL
(DI COOLING WATER SYSTEM)

PART 1 - GENERAL

1.01 RELATED DOCUMENTS

A. Drawings and general provisions of Contract, including General and Supplementary Conditions and Division 1 Specification sections, apply to work of this section as if repeated herein.

1.02 DESCRIPTION

A. The extent of cooling tower work is as shown on drawings and in schedules and is hereby defined to include (but not by way of limitation) the furnishing and installing of cells complete with casing, nozzles, drift eliminators, anti-cavitation plate, and accessories, as indicated.

1.03 SUBMITTALS

A. Submit manufacturer's data on cooling towers, including certified drawings showing overall dimensions, operating weights, weight loading, sizes and locations of connections, accessories and support requirements. Submit complete performance data including Cooling Tower Institute (CTI) certification.

PART 2 - PRODUCTS

A. General: Furnish and install as shown on drawings, factory assembled cooling tower of counterflow blow-through design, with single side air entry. Cooling tower shall have fan assemblies built into the pan, with all moving parts factory mounted and aligned. Standard construction shall be of heavy gage steel protected with Corrosion Protection.

B. Capacity: The cooling tower(s) shall have capacity as scheduled. Performance shall be certified by the Cooling Tower Institute in accordance with CTI Certification Standard STD-201.

C. Pan/Fan Section: The combination pan/fan section shall be constructed of heavy gage galvanized steel protected with Corrosion Protection. The fans and motors shall be located in the dry entering airstream. Standard pan accessories shall include circular doors, large area lift-out strainer of anti-vortexing design, and brass make-up valve with plastic float.

D. Fans: The forwardly curved centrifugal fans shall be statically and dynamically balanced. Fan housings shall have curved inlet rings for efficient air entry, and rectangular discharge cowls shall extend into the pan to increase fan efficiency and prevent water from entering the fans. Fans shall be mounted on a steel fan shaft supported by heavy-duty, self-aligning, relubricatable bearings with cast iron housings. The fan wheels, fan housings, inlet rings and discharge cowls shall be protected with Corrosion Protection. The fan shaft shall be protected with a two-part epoxy coating for corrosion protection.

E. Fan Motor and Drive: TEFC ball bearing fan motor(s) with 1.15 service factor shall be furnished. Motors shall be suitable for outdoor service on electrical service provided. Each motor shall be located in a protective enclosure on an easily adjusted heavy-duty motor base. V-Belt fan drive(s) shall be designed for not less than 150% of motor nameplate horsepower. Drive(s) and all moving parts shall be protected by removable hot-dip galvanized screens and panels protected with Corrosion Protection. Motors shall be energy efficient type.

F. Surface Section: The heat transfer casing section(s) shall be removable from the pan-fan section to facilitate rigging. Each section shall include serpentine, PVC wet deck surface below a spray-type water distribution system, all encased by galvanized steel panels protected with Corrosion Protection with removable sectional eliminators at the top. The wet deck surface shall consist of serpentine sheets of polyvinyl chloride (PVC). It shall be Factory Mutual Research Corp. approved for factory-assembled cooling towers.

G. Water Distribution: Water shall be distributed evenly over the tower fill area by a water distribution system consisting of header and spray branches of Schedule 40 PVC pipe with large orifice plastic distribution nozzles. The branches and plastic spray nozzles shall be held in place by snap-in rubber grommets providing quick removal of individual nozzles or complete branches for cleaning or flushing. The header shall include provisions for measuring spray pressure externally.

H. Eliminators: Eliminators shall be constructed of hot-dip galvanized steel protected with Corrosion Protection and be removable in easily handled sections. They shall have a minimum of three changes in air direction with a hooked leaving edge. They shall direct discharge air away from the fans and limit drift loss to less than 0.002% of the total water circulated.

I. Capacity Control Dampers: Dampers shall consist of a single air foil type damper located in each fan housing discharge. Provide a control package consisting of control transformer damper motor activator, linkage, end switch, proportional acting temperature controller to modulate dampers and stop fans when dampers reach closed position.

J. Accessories: Provide bottom inlet screens, flow control valves, vibration isolators and vibration switch.

K. Seismic Zone: Tower shall be roof mounted in Seismic Zone 4.

L. Manufacturer: Baltimore Aircoil, Model VXT, or equal.

PART 3 - EXECUTION

3.01 INSTALLATION

A. Comply with cooling tower manufacturer's instructions for installation, except as otherwise indicated.

B. Install flow-control float valves where indicated.

C. Adjust temperature controls and verify operation.

D. Pipe blowdown and drain to sanitary drain.

3.02 START-UP

A. Clean the tower thoroughly. Comply with manufacturer's instructions for filling and start-up of operation, but not less than the following:

1. Adjust water-load control for proper operating level.

3.03 TESTING AND ADJUSTING

A. Manufacturer's representative shall inspect tower after installation is complete and shall submit a written report to contractor prior to start-up, verifying that installation is in accordance with specifications and manufacturer's instructions. One(1) copy of said report shall be given to the SDR prior to start-up

B. Performance Test: Test each cooling tower to show that it will operate in accordance with the indicated performance requirements. Provide copy of test to Sandia Delegated Representative.

C. Conduct the test in accordance with the ASME Power Test Code PTC- 23, 1986.

END OF SECTION

SECTION 15717

COOLING TOWER FIELD ASSEMBLED

PART 1 GENERAL

1.01 RELATED DOCUMENTS

A. Drawings and general provisions of Contract, including General and Supplementary Conditions and Division 1 Specification sections, apply to work of this section as if repeated herein.

1.02 DESCRIPTION

A. The extent of cooling tower work is as shown on drawings and in schedules and is hereby defined to include, but are not limited to the furnishing and installing of cells complete with casing, nozzles, drift eliminators, anti-cavitation plate, and accessories, as indicated.

1.03 SUBMITTALS

A. Submit manufacturer's data on cooling towers, including certified drawings showing overall dimensions, operating weights, weight loading, sizes and locations of connections, accessories and support requirements. Submit complete performance data.

PART 2 COOLING TOWER

2.01 PACKAGED COOLING TOWER

A. General Requirements:

1. Standard Products: Materials and equipment shall be standard products of a manufacturer regularly engaged in the manufacturing of such products, in the United States of America, and of a similar material, design and workmanship. The standard products shall have been in satisfactory commercial or industrial use for a minimum of five years prior to the date of bid opening. The five-year use shall include applications of equipment and materials under similar circumstances and of similar size. The equipment items will be supported by a service organization. These service organizations shall be reasonably convenient to the equipment installation and shall be able to render satisfactory service within 24 hours to the equipment on a regular and emergency basis during the warranty period of the contract.

2. Nameplates: Each major component of equipment shall have the manufacturer's name, address, type or style, and catalog or serial number on a plate securely attached to the item of equipment. Nameplates shall be provided for cooling tower fans, motors, vibration sensors, gear drives, and like items.

3. Equipment Guards and Access: Belts, pulleys, chains, gears, couplings, projecting setscrews, keys, and other rotating parts so located that any person may come in close proximity thereto shall be fully enclosed or guarded. High-temperature equipment and piping so located as to endanger personnel or create a fire hazard shall be guarded or covered with insulation of a type as specified for service. Stairs, catwalk, ladder with safety cage, and guardrails shall be provided components where indicated on drawings by the cooling tower manufacturer. Expected life of these components shall match that of the tower and shall be either stainless steel, aluminum or fiber reinforced plastic.

B. Welding, Non-factory: Cooling-tower, water-return piping within the tower cells shall be welded in accordance with the qualified procedures using performance qualified welders and welding operators. Any structural welding that is required for field assembly of a tower shall be noted in the submittal documents for SDR review in conformance with the specifications. SDR shall be notified 24 hours in advance of tests and the tests shall be performed at the work site if practical. If tests are off-site then the notification shall be 7 days. Sandia shall be furnished with a list of qualified welders and welding operators. The welder or welding operator shall apply its assigned symbol near each weld made as a permanent record.

C. Standards Compliance: Where equipment or materials are specified to meet the requirements of standards recognized technical or industrial organizations, such as American Society of Mechanical Engineers (ASME), Underwriters Laboratories (UL), National Electrical Manufacturer's Associations (NEMA), or International Conference of Building Officials (ICBO), that use a label or published listing as a method of indicating compliance, submit proof of the conformance. The label or listing of the specified organization will be acceptable evidence. In lieu of the label or listing, the Subcontractor may submit a certificate from an independent testing laboratory (NRTL) recognized under 29 CFR 1910.7, stating that the item has been tested and meets the specified standard.

2.02 ACCEPTABLE MANUFACTURERS

A. Ceramic/Division of BAC, Baltimore Air Coil Inc., no substitutions allowed.

2.03 FABRICATION

A. Type: The-one cell cooling tower assembly shall be a counterflow factory-fabricated and field-erected, mechanical draft type, with PVC cross-corrugated film type fill and piping risers and distribution system, structural frame. Provide with braces and supports of internal tower components, thermal sensors, double wall fiberglass-reinforced plastic (FRP) side panels, casing, mist eliminators. Provide with access stairs, ladder with safety cage, catwalks with guard rails and fan deck area, air louvers inlet, free water drift loss to be less than one hundred of one percent of the water circulated to tower. Fan motors shall be 40 hp TEFC type with variable speed drive assemblies. Tower cell shall have the capacity to cool 2115 gpm of circulating water from a maximum of 97°F down to 82°F leaving water temperature at a 71°F wet bulb temperature design condition. The maximum allowable tower field head per cell is 25 feet at an inlet connection 7 feet above the basin curb. The field head shall include all piping loss, elevation changes, distribution piping and spray nozzle losses. Design and rating requirements and permissible variations from the design conditions shall be in accordance with CTI ATC-105. Contractor shall install the one cell tower arrangement utilizing the existing concrete basin with all required structural and concrete modifications. Use all stainless steel bolts and nuts. Base plates shall be stainless steel or FRP.

B. Design Loads: The complete cooling tower assembly shall be designed for a combination of dead load, live load, and seismic or wind load whichever governs.

1. Dead load shall include weight of distribution pipes, stairs, catwalk, ladders, handrails, liquid, and other appurtenances supported by the structure.

2. Live load on catwalks shall be 100 psf and 250 lbs concentrated load over an area of 16 square inches.

3. Wind load shall be in accordance with ICBO UBC for exposure C, taking various height zones and shape factors into consideration.

4. Seismic load shall be based on ICBO UBC zone 4 with Z factor equal to 0.5

5. The long term structural impact of creep and degradation of the modulus of elasticity shall be taken fully into account in design of fiberglass members.

6. All composite structural members used in the cooling tower shall be pultruded and specifically designed, selected and rated for cooling tower duty, with

design loads and safety factors appropriate for the specified conditions of operation. In addition:

a. Columns shall have large cross-section and be stable in 360 degrees horizontally.

b. Structural connections shall be pinned type with stainless steel fasteners.

c. All composite parts shall be factory fabricated and sealed.

d. No field bonding of joints or members will be permitted.

e. All exterior and interior surfaces shall be protected from ultraviolet (UV) radiation and water migration by means of a polyester surfacing veil molded integrally into the composite part. Minimum thickness of veil shall be 17-22.

f. Maximum water absorption of components shall be in accordance with CTI 137.

g. Composite beams, columns, wall panels, fan deck, fill supports, partitions and molded fan stocks shall be constructed of fire-retardant glass reinforced isopthalic polyester or vinylester resin with a flame spread rating of 25 or less in accordance with ASTM E 84, Tunnel Test.

C. Casing: Type 304 stainless steel or fiberglass-reinforced plastic (FRP). FRP shall be double cased, 40-ounce per square foot minimum and shall have opaque corrugated panels in compliance with CTI ATC-131 and 137. Corrugations shall be laid with all joints lapped one corrugation. Vertical joints shall be lapped and caulked. Construction shall be bolted with type 304 stainless steel, bolts and nuts with neoprene and stainless steel washers under the heads. Stainless steel surfaces damaged due to welding shall be patch-spot coated with zinc rich coating.

D. Louvers: FRP or PVC located on a single tower cell. The total required free areas of air flow for each cell shall be calculated to insure the proper required rating. Material used shall be compatible with the casing and of thickness to withstand alternate wetting and drying without cracking or splitting. Provide an access door for each cell. Louver arrangement shall be horizontal and arranged to minimize water splash out during times of idle fan operation. Intermediate supports shall be installed to prevent horizontal or vertical "sagging" or "bowing" of louvers in excess of one-half inch deflection over their entire length.

E. Framing: Fabricate from fiberglass, FRP, or stainless steel formed shapes. Construction shall be as specified for casing. Assembly fasteners to be stainless steel.

F. Fill Material: Fill material shall comply with and conform to ASTM D 1784, Type 1, Grade 1, PVC sheets with minimum 19 mm flute opening size and 15 mil minimum thickness and arranged in a honeycomb, cross-corrugated or waveform configuration, conforming to requirements of Steiner Tunnel test specified in ASTM E 84 with a flame spread rating of 15 or less. Fill material shall be free to expand or contract without warping. All fill shall be bottom supported. The fill supports shall be capable of supporting the loads expected when tower is fully loaded with liquid and operating.

G. Fans: Wheels shall be multi-blade axial flow airfoil adjustable-pitch propeller type, constructed of cast aluminum or an aluminum alloy, FRP or fiberglass reinforced, mounted in a suitable scroll or fan cylinder. Maximum allowable tip speed shall be 12,400 FPM. Vibration sensor switch shall be provided to shut down the fan motor on excessive vibration. Switch shall have local manual reset. An oil level switch shall be provided by the cooling tower manufacturer. Wiring for oil level switch and vibration switch shall be provided to a common junction box conveniently located near the motor for remote connections. An oil level sight glass and fill/drain line shall be outside the tower to allow ease of observation. The vent lines shall terminate outside the tower structure. The vent lines shall be hot dip galvanized steel. Fan motors shall be corrosive duty, premium efficiency, rated for VFI service, Class F insulation, NEMA MG 1 and shall be a totally enclosed fan cooled type. Motors shall be low-noise type and shall be located outside the discharge airstream. VFD shall be mounted and wired in Building 907 by Division 16. The motor shaft shall be equipped with a safety guard fabricated of metal screening material. Fan deck live load to be 60 psf uniform load minimum. Submit energy efficient type fan/shroud information for approval by the SDR that the tower discharge air plume will not be capable of re-entry into the intake louvers of the new tower. Provide maintenance access to the fan reducer with grating and ladder.

H. Speed Reducers: The speed reducer gears shall be rated in accordance with practices of the American Gear Manufacturers Association, using a Service Factor of 2.0 minimum for cooling tower services. These shall be in accordance with CTI 111. The gear reducers shall be of the spiral bevel type.

I. Drive Connection:

1. The motor shall be installed outside the air stream, the drive shaft shall be the full floating type with flexible couplings on both ends.

2. The drive shafts shall be of all stainless steel or composite design, fitted on each end with flexible stainless steel type couplings. Each drive shaft coupling shall be provided with a galvanized steel guard to prevent damage to the surrounding equipment in case of coupler or shaft failure.

3. Equipment vibration amplitude shall not exceed 0.157 inches/sec peak velocity or 2.0 mils peak-to-peak displacement at all frequencies in accordance with General Machinery Vibration Severity Chart guidelines. Performance of these requirements may be verified by the SDR. Contractor shall correct any vibrations that do not meet these requirements no additional cost to Sandia.

J. Distribution System:

1. The distribution system when located within the cell walls for each cell shall consist of a epoxy lined and coated steel pipe with flanged connection outlet on riser (location as per detailed manufacturer's requirements), complete with header, side laterals, fittings and nozzles. All manufacturer supplied distribution system piping shall be either PVC or fiberglass, depending on size. The fittings and nozzles shall be FRP, PVC or ABS.

2. The distribution piping, including nozzles, pipe and fittings shall be supplied complete by the cooling tower manufacturer. All remaining piping, including, but not limited to, distribution riser supply piping, hot tapping connections to existing CTWR header and suction lines, shall be lined and epoxy coated and installed complete by Contractor. All tower piping that is provided shall be seismic supported and restrained.

3. All penetrations through the basin structure shall be installed in a manner to ensure a waterproof joint.

K. Cold-Water Basin (Existing): Existing concrete basin shall have all interior cracks and joints made watertight with the use of a waterplug concrete sealant. Modify basin per structural drawings and in conformance with manufacturer's drawing requirements of supplied equipment for support pier locations. Information noted on structural drawings of these contract documents are only applicable to ceramic cooling towers. The basin shall be protected from debris during installation of the cooling tower.

L. Structural Supports and Foundations: Supports and foundation modifications to utilize the existing basin shall be provided in accordance with the component dimensions and structural recommendations of the manufacturer chosen to supply the equipment associated with the tower. Foundation design shown on the structural drawings is adequate for ceramic towers. Foundation design shall be based on the load conditions and soil bearing value indicated. Attachment details and stamped foundation calculations shall be submitted with the equipment drawings.

M. Mist Eliminators: Eliminators shall be of the 3-pass zigzag type, assembled into sections making a strong, stable unit. Free water carry-over shall not exceed 0.025 percent of the water flow. These sections shall be supported on PVC or FRP tee sections and tee sections shall be suspended with 1/4-inch stainless steel rods connected to stainless steel clips embedded in the bottom side of the roof deck at the time of casting. Stainless steel clips shall be supplied by cooling tower manufacturer for installation by Contractor at time of roof deck pour. Eliminators may be supported by stainless steel suspension rods from the fan deck or supported directly on concrete beams. A stainless steel access door shall be provided for passage through the eliminators. Eliminators may be either PVC extruded sections or wave formed sheets of PVC resin conforming to and complying with ASTM D 1784 type I, Grade 2. Eliminators and supporting framework shall have flame spread rating of 25 or less when tested in accordance with ASTM E 84.

N. Access and Safety

1. An access hatch shall be provided through the fan deck on each tower cell for personal access to the eliminators, plenum section and the mechanical equipment. A stainless steel internal ladder shall be furnished on each tower cell for access to an grating walkway over the center riser. Ladder rungs shall be furnished on each riser up to the gear box on each cell.

PART 3 EXECUTION

3.01 INSTALLATION

A. Comply with cooling tower manufacturer's instructions for installation.

B. Install flow-control and float valves.

C. Adjust temperature controls and verify operation.

D. Pipe blowdown and drain lines to sanitary drain basin.

3.02 START-UP

A. Clean the tower thoroughly. Comply with manufacturer's instructions for filling and start-up of operation, but not less than the following:

1. Adjust water-load control for proper operating level.

3.03 TESTING AND ADJUSTING

A. Manufacturer's representative shall inspect tower after installation is complete and shall submit a written report to contractor prior to start-up, verifying that installation is in accordance with specifications and manufacturer's instructions. One(1) copy of said report shall be given to the SDR prior to start-up

B. Performance Test: Test each cooling tower to show that it will operate in accordance with the indicated performance requirements. Provide copy of test to Sandia Delegated Representative.

C. Conduct the test in accordance with the ASME Power Test Code PTC- 23, 1986.

END OF SECTION

SECTION 15747

CONDENSER WATER TREATMENT SYSTEM

PART 1 - GENERAL

1.01 RELATED DOCUMENTS

A. Drawings and general provisions of Contract, including General and Supplementary Conditions and Division 1 Specification sections, apply to work of this section as if repeated herein.

1.02 DESCRIPTION

A. Extent of condenser water treatment system work required by this section is indicated on drawings and schedules and by requirements of this section, and includes necessary equipment, chemicals, and service to inhibit development of scale, corrosion, and biological growth.

B. Service Period: Provide chemicals and service program for period of one year from start-up date of condensing equipment, including the following:

Initial water analysis and recommendations
Systems start-up assistance
Training of operating personnel
Periodic field service and consultation
Customer report charts and log sheets
Laboratory technical assistance

1.03 QUALITY ASSURANCE

A. Supplier: Water treatment chemical and service supplier who has been active in field of industrial water treatment for not less than 5 years, and who has full-time service personnel located within trading area of job site.

B. Codes and Standards:

1. UL and NEMA Compliance: Provide electrical components required as part of condenser water treatment equipment, which are UL-listed and labeled and comply with NEMA Standards.

2. NEC Compliance: Comply with National Electrical Code as applicable to installation, electrical connections, and ancillary electrical components of condenser water treatment equipment.

3. Chemical Standards: Provide only chemical products which are acceptable under state and local pollution control regulations.

1.04 SUBMITTALS

A. Product Data: Submit manufacturer's technical product data, including rated capacities of selected equipment clearly indicated, water pressure drops, weights, installation and start-up instructions and furnished specialties and accessories.

B. Shop Drawings: Submit manufacturer's assembly-type shop drawings indicating dimensions, weight loadings, required clearances and methods of assembly of components.

C. Wiring Diagrams: Submit manufacturer's electrical requirements for power supply wiring to water treatment equipment. Submit manufacturer's ladder-type wiring diagrams for interlock and control wiring. Clearly differentiate between portions of wiring that are factory-installed and portions to be field-installed.

D. Maintenance Data: Submit maintenance data and parts list for each item of equipment, control, and accessory; including "trouble shooting" maintenance guide. Include this data, product data, shop drawings, and wiring diagrams in maintenance manual; in accordance with requirements of Section 15010, "BASIC MECHANICAL REQUIREMENTS".

PART 2 - PRODUCTS

2.01 PERFORMANCE OF EQUIPMENT

A. General: Provide system sized and equipped to treat raw water available at project site to maintain the following condenser water characteristics (tested values for condenser operation):

Hardness: 0.00
Iron: 0.00
Total Alkalinity: 1026 or less
Silica: 120 or less
Total Algae: 0.00 growth
pH: 10.5 or above

2.02 MATERIALS AND EQUIPMENT

A. General: Except as otherwise indicated, provide condenser water treatment system manufacturer's standard materials and components as indicated by published product information and as recommended by manufacturer for application indicated.

B. Chemical Treatment Controller: Provide automatic controllers for conductivity and pH control.

C. Chemical Feeder Pumps: Provide positive displacement diaphragm pumps or positive displacement piston pumps.

   1. Acid pumps shall be all stainless steel.

D. Chemical Solution Reservoir: Provide chemical resistant reservoir fabricated from either high density opaque polyethylene or metal; with factory-installed internal floating suction assembly. Provide tank-mounted agitator.

E. Condenser Water Sample Test Kit: Furnish kit including carrying case and spare reagents, recommended by condenser water treatment system manufacturer for determining water hardness and water characteristics.

F. Chemicals, Condenser Water Treatment: Furnish chemicals recommended by condenser water treatment system manufacturer for treating water to meet specified water quality. Ascertain from condenser water piping system installer, what materials are used for condenser pump seals. Provide only chemicals that are compatible with these materials.

G. Provide water meter for make-up and blow-down lines. A signal from the make-up water meter shall be used to automatically determine the chemicals feed cycle where applicable.

H. Available Manufacturers: Subject to compliance with requirements, manufacturers offering condenser water treatment system which may be incorporated in the work include, but are not limited to, the following

   Betz Laboratories, Inc.
   Calgon Corporation
   Culligan USA; Industrial Division
   Dearborn Chemical, Chemed Corporation
   Garratt-Callahan Co.
   Mogul; Division of The Dexter Corporation
   Nalco Chemical Co.

PART 3 - EXECUTION

3.01 INSPECTION

A. General: Examine areas and conditions under which condenser water treatment systems are to be installed. Do not proceed with work until unsatisfactory conditions have been corrected in manner acceptable to installer.

3.02 INSTALLATION OF CONDENSER WATER TREATMENT SYSTEM

A. General: Install condenser water treatment system in accordance with manufacturer's written instructions.

B. Coordinate with other work (plumbing and hydronic piping) as necessary to interface components of condenser water treatment system properly with condenser cooling water system.

C. Electrical Wiring: Install electrical devices furnished by manufacturer but not specified to be factory-mounted. Furnish copy of manufacturer's wiring diagram submittal to Electrical Installer.

D. Install pressure gages, valves, and controls furnished by manufacturer, in accordance with manufacturer's instructions.

3.03 PRECLEANING AND START-UP

A. General: Flush condensers using precleaning chemicals designed to remove construction deposits such as pipe dope, oils, loose mill scale, and other extraneous materials. Add recommended dosages and recirculate for 6 to 8 hours. Drain and flush until total alkalinity of rinse water is equal to make-up water. Refill with treated clean water.

B. Start-up Procedures: During condenser cooling water system start-up, operate condenser water treatment system (after charging with specified chemicals) to maintain required steady-state characteristics of cooling water.

3.04 TESTING

A. Sample condenser cooling water at one-week intervals after condenser start-up for period of 4 weeks and prepare certified test report for each required water performance characteristic. Comply with the following standards, where applicable:

ASTM D 859 - Test Methods for Silica in Water
ASTM D 1067 - Test Methods for Acidity or Alkalinity of Water
ASTM D 1068 - Test Methods for Iron in Water
ASTM D 1126 - Test Methods for Hardness in Water
ASTM D 3370 - Practices for Sampling Water

3.05 TRAINING OF SANDIA PERSONNEL

A. Provide services of supplier's representative for one-half day to instruct Sandia personnel in operation, maintenance, and testing procedures of condenser water treatment system.

END OF SECTION

SECTION 15755

HEAT EXCHANGERS

PART 1 - GENERAL

1.01 RELATED DOCUMENTS

A. Drawings and general provisions of Contract, including General and Supplementary Conditions and Division 1 Specification sections, apply to work of this section as if repeated herein.

1.02 DESCRIPTION

A. The extent of the Heat Exchanger work is indicated by the drawings, schedules and specifications.

B. Code Compliance: Comply with ASME Section VIII, Division 1 Code Requirements for Unfired Pressure Vessels, for 865 kpa *(125 psi)* working pressure. Units shall bear ASME Code stamp.

C. Size, capacity and pressure drop as indicated in schedule.

D. Submit manufacturer's data including dimension prints, weights, mounting details, and performance data, showing compliance with drawings, schedule and specifications. Include operating and maintenance data for inclusion in operating and maintenance manual.

PART 2 - PRODUCTS

2.01 PLATE TYPE HEAT EXCHANGERS

A. End unit shall be complete with epoxy painted carbon steel end frames, Series 300 stainless steel guide rails and zinc plated locking bolts. The embossed heat transfer plates are to be Series 316 Stainless steel with tapered gasket grooves. Gaskets shall be made of Nitril. The nozzles shall be Series 316 stainless steel, 1035 kpa *(150 lb.)* design, with studded port connections. Each unit shall have Series 300 stainless steel shroud to protect plates and gaskets.

B. The exchanger shall be designed for counter-current flow and with all inlet nozzles located on one end of the unit. The unit shall be furnished for 670 kpa *(100 PSIG)* design pressure and 65 deg. C *(150 F)* temperature. Each unit shall be hydrostatically tested at 1035 kpa *(150 PSIG)* at the factory after final assembly and shipped to the job site fully assembled. Each unit shall have an ASME, Section 8, Division I stamp.

C. Manufacturers: Baltimore Aircoil Co., Inc., Mueller Accu-Therm, Patterson-Kelley Co., or Tranter Inc.

2.02 SHELL AND TUBE TYPE HEAT EXCHANGERS

A. U-tube with a minimum 20 mm *(3/4")* OD seamless copper tubes suitable for 865 kpa *(125 psi)* working pressure.

B. Heads shall be cast iron or steel, with steel or bronze tube sheets, threaded or flanged for piping connections.

C. Design for heating fluid in shell and heated fluid in tubes.

D. The unit shall be furnished for 670 kpa *(100 PSIG)* design pressure and 65 deg. C *(150 F)* temperature. Each unit shall be hydrostatically tested at 1035 kpa *(150 PSIG)* at the factory after final assembly and shipped to the job site fully assembled. Each unit shall have an ASME, Section 8, Division I stamp.

F. Manufacturers:Ace-Buehler Inc., Bell and Gossett Inc. or equal.

2.03 WATER TO WATER HEAT EXCHANGER TRIM

A. Provide for temperature-regulator sensor at heated-water outlet.

B. Provide ASME rated pressure and temperature relief valve on heated water discharge.

C. Provide thermometers and pressure gauge tappings on water inlets and outlets.

D. Provide ASME rated pressure relief valve on water inlet on downstream side of control valve.

E. Provide valved drain.

2.04 STEAM TO WATER HEAT EXCHANGER TRIM

A. Provide for temperature-regulator sensor at water outlet.

B. Provide ASME rated pressure and temperature relief valve on water outlet.

C. Provide thermometers and pressure gauge tappings on water inlets and outlets.

D. Provide vacuum breaker and pressure gauge tapping with pigtail siphon in shell.

E. Provide ASME rated pressure relief valve on steam inlet on downstream side of control valve.

F. Provide valved drain.

PART 3 - EXECUTION

3.01 INSTALLATION

A. Install in accordance with manufacturer's instructions and details shown on drawings.

END OF SECTION

SECTION 15777

COMPUTER ROOM AIR CONDITIONING SYSTEMS

PART 1 - GENERAL

1.01 RELATED DOCUMENTS

A. Drawings and general provisions of Contract, including General and Supplementary Conditions and Division 1 Specification sections, apply to work of this section as if repeated herein.

1.02 DESCRIPTION

A. The extent of the computer room air conditioning system work is indicated by drawings and schedules, and by requirements of this section. Each unit is defined to include (but not by way of limitation) fan and motor, filter, cooling coil, drip pan, thermal insulation, controls, starters, and panels.

1.03 QUALITY ASSURANCE

A. Manufacturer: Liebert Corporation, Pomonair, BCS Industries.

B. Installer: A firm with at least three (3) years of successful installation experience on projects with packaged air handling units.

C. NFPA Compliance: Comply with applicable provisions of NFPA Standard No. 90A, "Air-Conditioning and Ventilating Systems", pertaining to installation of electric heating coils.

D. NFPA Compliance: Comply with applicable provisions of National Electric Code (NFPA No. 70), pertaining to construction and installation of electrically operated components of packaged air handling units.

E. Flame-Smoke Ratings: Except as otherwise indicated, provide air handling unit thermal insulation with flame-spread rating of 25 or less, fuel-contributed of 50 or less, and smoke-developed rating of 50 or less.

F. UL Compliance: Provide electric components for air handling units which have been listed and labeled by Underwriters Laboratories.

1.04 SUBMITTALS

A. Submit manufacturer's data on packaged units including drawings showing overall dimensions of complete assembly, operating weights, equipment support requirements, sizes and locations of water, and electrical connections, accessories and auxiliary support requirements.

B. Submit dimensioned drawings of installed packaged units and components. Show accurately scaled unit layout and spatial relationship to surrounding environment; and show electrical power feeder connections, duct connections and equipment supports.

PART 2 - PRODUCTS

2.01 COMPUTER ROOM AIR CONDITIONING SYSTEM (FLOOR MOUNT TYPE)

A. The computer room air conditioning system shall be a factory assembled unit with down discharge air flow pattern. The system shall be designed for draw through air arrangement to ensure even air distribution to the entire face area of the coil. The computer room air conditioning system shall have the following built-in components:

1. Cabinet and Frame Construction: The frame shall be constructed of heliarc welded tubular steel for maximum strength. The interior sheet metal shall be welded to the frame assembly and the exterior panels shall be insulated with a minimum 25 mm *(1")*, 0.7 kg *(1-1/2 lb)*. density fiber insulation. All panels shall have concealed fasteners and shall be quickly removable for easy access to the equipment. The panels shall be arranged to provide access to the electrical control panel and compressor section without interrupting the air flow. Color to be selected by SDR.

2. Water Coil: The water coil shall have face area as indicated. It shall be constructed of copper tubes and aluminum fins and have a maximum face velocity and CFM as indicated. The entire coil assembly shall be mounted in a stainless steel condensate drain pan.

3. Fan Section: The fan shall be the centrifugal type, double width, double inlet and shall be statically and dynamically balanced at the factory as a completed assembly. The wheels shall be supported on a heavy duty steel shaft having self aligning ball bearings with a minimum life span of 100,000 hours. They shall be driven by 1750 RPM fan motor mounted on an adjustable slide base. The drive package shall be two belt, variable speed, sized for 200% of the fan motor horsepower. The fans shall be located to draw air over the A-frame coil to ensure even air distribution and maximum coil performance. Motor HP as indicated.

4. Filter Chambers: The filter chambers shall be an integral part of the system, designed within the frame and cabinet. The filters shall be rated not less than 65 percent efficiency by the N.B.S. Atmospheric Dust Spot Test. The filters shall be serviceable from either end of the unit without the use of ladders or special rigging.

5. Electronic Control System: The electronic control system shall be totally solid state. The system shall be provided with Start button, Stop button, Silencer button, Temporary Loss of Power indicator, manual reset circuit breakers, plug-in solid state temperature control with sensitivity adjustment, and backlighted monitor panel.

    a. The backlighted monitor panel shall have no visible indicator lights until the actual operating function is required by the system. When required by System/2 demand, the following visual indicators shall appear:

        (1)Cooling
        (2)Change Filters

    b. The solid state temperature shall have one adjusting sensing point for the room conditions. The temperature shall have a "push-to-test" calibration check button and built-in visual indicators to indicate the mode of operation of the control. All controls and control sensors shall be easily accessible, plug-in modules.

    c. The electronic control center shall be serviceable by raising a hinged door in the front of the unit. This electronic control center shall beisolated from the conditioned air stream to allow service while the system is in operation.

    d. Each high voltage circuit in the system shall be individually protected by a dual element fuse. All starters, contactors and relays shall be controlled by a 24 volt control circuit. All high voltage components shall be protected by a safety lock dead front panel.

B. The Total System: The total system shall be designed to allow the control system and electrical circuitry to be serviced and/or checked while the system is in operation and without disturbing the air flow and performance of the system.

    1. Capacity as indicated on drawings and in schedules.

C. Floor Stand: The environmental control system shall be furnished with an adjustable floor stand. The floor stand shall isolate the air conditioning unit from the raised floor and shall be constructed of a heliarc welded tubular steel frame with corner gussets. The floor stand shall have adjustable legs connected to vibration isolation pads. The floor stand shall be used to install the air conditioning equipment before the raised floor is put into place to allow all piping and wiring from the unit to be completed before the raised floor is installed. The floor stand shall be adjustable.

D. Mode-Alert Panel: The environmental control system shall be furnished complete with a Mode-Alert Warning Panel. The Mode-Alert panel shall include a solid state plug-in module, silencer switch, individual red indicators for each to be monitored, and an audible alarm.

1. The backlighted Mode-Alert panel shall have no visible indicators until an alert condition exists. The Mode-Alert panel shall indicate each separate alert condition by sounding an audible alarm and displaying the corresponding red indicator on the face of the panel when an alert condition exists. A red indicator shall be furnished for each of the following alert conditions:

    a. Loss of Airflow
    b. Change Filters
    c. High Temperature
    d. Low Temperature
    e. Water Under Floor

2. The Mode-Alert panel shall include a "push-to-test" circuit for checking all red visual indicators and the audible alarm, a set of non-powered normally open contacts for a remote customer alarm, and an optional, customer specified, visually displayed message which is displayed for each of the alert conditions.

3. The temperature control for the Mode-Alert panel shall be individually adjustable to suit the operating tolerances of the computer room as specified in the computer manufacturer. The change filter switch shall be the heavy duty, bellows type having an adjustable range from 0 to 2 inches water gauge.

E. Firestat: The environmental control system shall be provided with a firestat. The firestat shall be mounted with the sensing element in the return air. When the firestat is activated it shall immediately shut down the air conditioning system.

F. Disconnect Switch (Locking Type): The unit shall include a nonautomatic molded case circuit breaker mounted in the high voltage section of the electrical panel. The complete switch shall include an operating mechanism which is operated from the outside of the unit when the cover for the electrical panel is closed. The operating mechanism shall prevent access to the high voltage electrical components until switched to the "OFF" position.

G. Liqui-Tect Sensor: The unit shall be provided with two Liqui-Tect sensors. The solid state water sensors shall be mounted under the raised floor to sense the presence of water. The sensor shall be connected in the field to the Mode-Alert panel and have a red indicator and audible alarm. The water detector shall become an integral part of the Mode-Alert warning system. The Mode-Alert panel shall display "Water Under Floor" when the sensor is activated.

2.03 COMPUTER ROOM AIR CONDITIONING UNITS (ABOVE CEILING TYPE)

A. Unit shall be a standard manufactured unit for above ceiling installation.

B. Units shall include components as follows:

1. Cabinet: 1.6mm *(16 gauge)* galvanized sheet steel, 3.2mm *(1/8")* steel angle frame, 15mm *(1/2")* thick fiberglass insulation, removable side panels, stainless steel drain pan, vibration isolators, contrifugal fan, motor, drive, supply grille, return grille with filter.

2. Chilled water cooling coil: Copper tube, aluminum fins with control valve.

3. Condensate Pump: Float operated for condensate removal.

4. Controls shall operate units using chilled water.

5. Control Sequence: Room thermostat shall control units to provide cooling the space. A remote panel shall indicate status of unit performance.

PART 3 - EXECUTION

3.01 INSTALLATION

A. Install units where shown, in accordance with equipment manufacturer's written instructions, and with recognized industry practices, to ensure that units comply with requirements and serve intended purposes.

B. Coordinate with other work, including ductwork, floor construction, and piping, as necessary to interface installation of units with other work.

C. Install units on vibration mounts as shown; comply with manufacturer's indicated installation method if any.

D. Refer to Section 15200 for seismic requirements.

3.02 TESTING

A. Upon completion of installation of units, start-up and operate equipment to demonstrate capability and compliance with requirements. Where possible, field correct malfunctioning units, then retest to demonstrate compliance to SDR.

END OF SECTION

SECTION 15788

PACKAGED AIR CONDITIONERS
(THRU THE WALL, HEAT PUMP)

PART 1 - GENERAL

1.01 RELATED DOCUMENTS

A. Drawings and general provisions of Contract, including General and Supplementary Conditions and Division 1 Specification sections, apply to work of this section as if repeated herein.

1.02 DESCRIPTION

A. Provide air-cooled packaged thru-the-wall, heat pump air conditioners as indicated on the drawings and schedule.

B. Manufacturers: Carrier, Singer, Trane Co., or equal.

C. Capacity: Heating and cooling capacity shall be as scheduled.

1.03 SUBMITTALS

A. Submit manufacturer's specifications for packaged terminal air conditioner units showing dimensions, capacities, ratings, performance characteristics, construction details, finishes of materials, and installation instructions.

B. Submit maintenance instructions, including lubrication instructions, filter replacement, motor and drive replacement, and spare parts lists.

PART 2 - PRODUCTS

2.01 PACKAGED AIR CONDITIONER

A. Unit shall be a self-contained packaged thru-the-wall heat pump for heating and air conditioning service.

B. Compressor shall be rubber shock mounted and internally spring mounted for quiet operation and vibration isolation. Compressor shall be in a hermetically sealed steel case and sprayed with black epoxy paint.

C. Evaporator and condenser coils shall have copper or aluminum tubing and aluminum fins. Coils shall be sized for heat pump service.

D. Evaporator and condenser fans shall be direct driven with electric motors. Evaporator fan shall be centrifugal type and condenser fan shall be propeller type with aspirator for condensate removal.

E. Electric heating coils shall be resistance type.

F. Controls shall be factory wired and completely enclosed within the unit and accessible from the top. Adjustable thermostat shall automatically cycle compressor to maintain space conditions. Thermostat shall be of the liquid-filled or vapor-filled cross-ambient type. Unit shall start and run to 1.7 deg C.(35 degrees F) outdoor temperature. Unit control shall be a position switch with high and low fan speeds for cooling and heating and one position for fan only operation. Ventilation control shall be a 2-position control to introduce fresh air to the room or to close the vent. All vent air and return air shall be filtered.

G. Room panel shall be acoustically insulated and provide for top air discharge.

H. Wall sleeve shall be a one-piece sleeve, U-channel reinforced for added strength, for wall installations. It shall be fabricated from 1.31mm(18-gauge) zinc clad steel and shall include outside grille. Finish on sleeve shall be baked-on epoxy-resin enamel. Grille and sleeve shall be shipped with closure panel at both the front and rear of sleeve and with installation instructions on inside panel. Outside grille shall be mounted in sleeve from inside room. Finish on outside grille shall be either anodized aluminum or baked-on epoxy enamel. It shall be no more than 815 mm *(32 inches)* wide, 465 mm *(18-1/4 inches)* high and 425 mm *(16-9/6 inches)* deep.

I. Unit chassis shall be slide-out and shall be shipped separate from the sleeve.

J. Subbase or junction box shall be provided for a permanently connected unit. Subbase includes factory-installed receptacle.

PART 3 - EXECUTION

3.01 INSTALLATION

A. Install per manufacturer's published installation instructions.

B. Coordinate electrical requirements.

C. Test units for capacity compliance on heating and cooling cycles.

END OF SECTION

SECTION 15790

COILS

PART 1 - GENERAL

1.01 RELATED DOCUMENTS

A. Drawings and general provisions of Contract, including General and Supplementary Conditions and Division 1 Specification sections, apply to work of this section as if repeated herein.

1.02 DESCRIPTION

A. Provide heating and cooling coils as indicated on the drawings in accordance with the schedules and specifications.

B. ARI Compliance: Comply with ARI 410, "Standard for Forced- Circulation Air-Cooling and Air-Heating Coils."

1. Provide manufacturer's certification of air-cooling and air-heating coil capacity in compliance with ARI Standard 410.

2. Provide HVAC coils bearing Air-Conditioning and Refrigeration Insititute (ARI) certification labels.

C. NFPA Compliance: Comply with applicable provisions of NFPA Standard No. 90A, "Air Conditioning and Ventilating Systems."

D. SMACNA Compliance: Comply with SMACNA (Sheet Metal and Air Conditioning Contractors' National Association, Inc.) standards, pertaining to coil casing construction and with applicable installation instructions.

1.03 SUBMITTAL

A. Submit manufacturer's data on HVAC coils.

B. Submit performance certification per ARI 410.

PART 2 - PRODUCTS

2.01 AIR-COOLING AND AIR-HEATING COILS

A. General: Provide air-cooling and air-heating coils, in the sizes and capacities shown, and with manufacturer's standard materials and components as indicated

by published product information, designed and constructed as recommended by the manufacturer, and as required for a complete installation.

B. Water Heating and Cooling Coils: Coils shall have casings of zinc-coated rust resistant steel with punched flanges for mounting or bolting together. Headers shall be welded steel with supply and return connections on the same end unless noted otherwise. Coils shall have 16 mm *(5/8")* OD seamless copper tubes and plate type or spiral wound aluminum fins. The headers shall have vent and drain connections that shall be extended to outside of casing. Coils shall be designed, tested and guaranteed for operation with water pressures to 1380 kpa *(200 psig)* and temperature to 193.3 deg. C *(380 degrees F)*, and subjected to a 2760 kpa *(400 psig)* air test under water before shipment. Provision shall be made for difference in expansion between casing and tubes. Cooling coil performance data shall be certified in accordance with ARI standard 410.

1. All cooling coils shall have drain pans. Multiple stacked coils shall also have intermediate drain pans.

2. Cooling coils, when indicated, shall be the completely drainable type with auxiliary drain headers to completely drain each tube without the use of compressed air.

3. Heat recovery coils shall have capacities based on Dow Chemical SR-1 solution in the system.

C. Duct Type Booster Coils: Coils shall be 16 mm *(5/8")* OD for water service. Fins shall be aluminum plate or spiral wound. Casings of zinc coated steel with provisions for mounting in ductwork. Coils shall be designed, tested and guaranteed for working pressures to 1380 kpa *(200 psig)* and water temperatures to 193.3 deg. C *(380 degrees F),* and steam temperature to 232.2 deg. C *(450 degrees F),* and subjected to a psig air test under water before shipment.

PART 3 - EXECUTION

3.01 INSTALLATION

A. Install HVAC coil products where shown, in accordance with equipment manufacturer's written instructions, applicable portions of NFPA's Standard No. 90A, and in accordance with recognized industry practices to ensure that products serve intended functions.

B. Coordinate with other work, including ductwork and piping, as necessary to interface installation of HVAC coils with other work.

C. Level or pitch coils to the indicated tolerance, in both directions. Install shims as required.

D. Comb out damaged fins which are bent or crushed before enclosing coils in housings.

E. Clean dust and debris from each HVAC coil as it is installed to ensure cleanliness.

END OF SECTION

SECTION 15812

AIR WASHERS

PART 1 - GENERAL

1.01 RELATED DOCUMENTS

A. Drawings and general provision of Contract, including General and Supplementary Conditions and Division 1 Specification sections, apply to work of this section as if repeated herein.

1.02 DESCRIPTION

A. The extent of the air washer work is shown on the drawings and schedules and the requirements of this section.

B. Units shall be factory assembled and shipped to jobsite ready for installation.

C. Submit manufacturer's data indicating capacity, dimensions, weight, and compliance with specifications.

D. Manufacturers: Buffalo Forge Company, American Air Filter Company, or Pneumafil Corporation.

PART 2 - PRODUCTS

2.01 AIR WASHER

A. General: Air washer shall be Buffalo Forge Aerofil, or equal, air washer with casing, Aerofil media, pump, tank, float valve, water distribution piping, suction screen, drain, overflow and quickfill connections.

B. Casing: Not less than 1.9 mm *(14 ga.)* galvanized steel, cadmium fasteners, angle iron bracing, gasketed joints and quick opening access door with dead light.

C. Air Washer Section:

1. The air washer section shall be located upstream of the cooling coil.

2. Media shall be 300 mm *(12")* depth cellulose 6.3 mm *(1/4")* flute bonded with wettable acrylic adhesive. Media shall be noncorrosive, impervious to fungus growth, and suitable for velocities to 3.3 m/s *(650 fpm)*. Media shall be self distributing and self-cleaning.

3. The fill shall be placed and flutes directioned per manufacturer's instructions to eliminate water carryover at design capacity.

D. Water distribution system: 40 mm *(1-1/2")* PVC piping, internally mounted pump.

E. Tank: 3.5 mm *(10 ga.)* steel welded watertight at corners and seams. Makeup valve shall be a float operated valve with 125 mm *(5")* diameter float ball and 6.4 mm *(1/4")* brass rod. Tank shall have an epoxy finish inside and outside. Tank shall have a 0.7 mm *(24 ga.)* flat removable strainer over the pump section.

F. The access section shall have a marine type light fixture in the ceiling.

G. Air washer shall have a saturation efficiency of not less than 98%.

H. Model No., capacity, face velocity and dimensions shall conform to schedule on drawings.

PART 3 - EXECUTION

3.01 INSTALLATION

A. Install air washers where shown, in accordance with equipment manufacturer's written instructions, and with recognized industry practices, to ensure that units comply with requirements.

B. Coordinate with other work, including ductwork, floor construction, roof decking, and piping, as necessary to interface installation of units with other work.

3.02 TESTING

A. An authorized factory trained field technician shall start up, test and operate equipment to demonstrate capability and compliance with requirements. Where possible, field correct malfunctioning units, then retest to demonstrate compliance to the SDR.

END OF SECTION

SECTION 15855

AIR HANDLING UNITS

PART 1 GENERAL

1.01 RELATED DOCUMENTS

A. Drawings and general provisions of Contract, including General and Supplementary Conditions and Division 1 Specification sections, apply to work of this section as if repeated herein.

1.02 DESCRIPTION

A. Provide outdoor weatherproof air handling units as indicated on the drawings, details, and schedules in accordance with the specifications.

B. Sizes, types and performance as indicated in schedules.

C. ARI Certification: Provide central station air-handling units which comply with Air-Conditioning and Refrigeration Institute Standard 430 and display ARI's certification symbols.

D. NFPA Compliance: Comply with applicable provisions of NFPA Standard No. 90A, "Air-Conditioning and Ventilating Systems".

E. NFPA Compliance: Comply with applicable provisions of National Electric Code (NFPA No. 70), pertaining to construction and installation of electrically operated components of air-handling units.

F. Flame-Smoke Ratings: Except as otherwise indicated, provide air-handling unit thermal insulation with flame-spread rating of 25 or less, fuel-contributed of 50 or less, and smoke-developed rating of 50 or less.

G. UL Compliance: Provide electric components for air-handling units which have been listed and labeled by Underwriters Laboratories.

H. AMCA Standards: Comply with Air Movement and Control Association Standards 210 and 500 as applicable to testing and rating fans.

1.03 SUBMITTALS

A. Product Data: Submit manufacturer's technical product data for air handling units showing dimensions, weights, capacities, ratings, fan performance with operating point clearly indicated, motor electrical characteristics, gages and finishes of materials, and installation instructions.

B. Shop Drawings: Submit assembly-type shop drawings showing unit dimensions, weight loadings, required clearances, construction details, and field connection details.

C. Wiring Diagrams: Submit manufacturer's electrical requirements for power supply wiring to air handling units. Submit manufacturer's ladder-type wiring diagrams for interlock and control wiring clearly differentiate between portions of wiring that are factory-installed and portions to be field-installed.

D. Maintenance Data: Submit maintenance instructions, including instructions for lubrication, filter replacement, motor and drive replacement, and spare parts lists. Include this data, product data, show drawings, and wiring diagrams in maintenance manuals; in accordance with requirements of Sections 15010, "BASIC MECHANICAL REQUIREMENTS".

PART 2 PRODUCTS

2.01 ACCEPTABLE MANUFACTURERS

A. Manufacturer: Subject to compliance with requirements, provide air handling units of one of the following:

Dunham-Bush
McQuay Inc.
Trane Co.

2.02 AIR HANDLING UNITS

A. Provide central station air-handling units where shown, of types, sizes, ratings and capacities indicated; consisting of components as indicated in schedules and details. Except as otherwise indicated, provide manufacturer's standard air-handling unit materials and component products as indicated by published product information, designed and constructed as recommended by manufacturer. Provide air-handling units with indicated functional and construction features as indicated.

B. Casings: Provide galvanized sheet steel unit casings of sectionalized construction, rigidly braced and reinforced with steel angle framework for required stiffness. Construct casing panels to be easily removable for access to interior of unit, and with hinged and latched filter doors to expedite filter servicing. Thermally insulate panels. Construct drain pans of welded galvanized steel sheet with drain connections on accessible ends of pans. Provide stacked cooling coils with

intermediate drain pan and drop tubes to guide condensate to main drain pan without flooding lower coil. Insulate drain pans internally with 15 mm(1/2") thick, closed-cell, water impervious, foam-in-place insulation. Phosphatize and paint casings inside and out with one coat of baked-on enamel. Provide zinc plated hardware. Construct fan discharge orifice as integral part and extension of fan housing.

C. Roof curb: Provide a pre-fabricated 12 gauge galvanized steel mounting curb designed and manufactured by the unit manufacturer ready for field assembly. The roof curb shall be a perimeter type with complete perimeter support of the unit. The wood curb shall be a minimum of 16" high and include a nominal 2" x 4" wood nailer strip. Gasketing shall be provided for field mounting between the unit base and roof curb.

D. Coils: Provide heating and cooling coils of scheduled capacity, mounted in unit to permit installation of control measuring devices and permit easy removal.

    1. Construct coils with copper tubing primary surface and aluminum secondary surface bonded to tubes by method approved by specified manufacturer. Provide chilled water and heating coils with threaded/flanged connections. Provide chilled water coils with drain and vent connections. Pitch coils in unit casing for drainage. Coils shall have a staggered tube type design. Coils shall be circuited for minimum pressure drop. Coils shall be tested at 315 lbs. air pressure under warm water and be guaranteed for 150 psig working pressure.

E. Coil Sections: Provide common or individual casing for heating and cooling coils as required. Design internal structure of coil section to allow for removal of coils, and provide suitable baffles to assure no air flow around coils. Provide condensate pans and drain connections to cooling coil sections of sufficient size to contain and remove condensate.

F. Supply fan section: Provide double width, double inlet centrifugal, air foil type forward curved fans specifically designed and suitable for class of service indicated. Provide adjustable motor base. adjusted with mounting bolts, to provide variation in center distance. Provide locking nuts, or similar devices, to secure base in proper position. Provide belt-driven fans with adjustable pitch pulley permitting fan speed to be varied. Select pulley for mid-point of adjustable range. Design fan shafts so as not to pass through first critical speed when unit comes up to rated RPM. Provide grease-lubricated fan gearings with externally accessible fittings for lubrication. Statically and dynamically balance fan assemblies in fan housing after final assembly. Entire fan assembly shall be completely isolated from the unit bulkhead with neoprene gasketing and mounted on double deflection spring isolators.

G. Return fan section: A return fan shall be used in conjunction with a 0-100% economizer damper section. Provide single width, single inlet centrifugal, air foil type forward curved fans specifically designed and suitable for class of service indicated. Provide adjustable motor base. adjusted with mounting bolts, to provide variation in center distance. Provide locking nuts, or similar devices, to secure base in proper position. Provide belt-driven fans with adjustable pitch pulley permitting fan speed to be varied. Select pulley for mid-point of adjustable range. Design fan shafts so as not to pass through first critical speed when unit comes up to rated RPM. Provide grease-lubricated fan gearings with externally accessible fittings for lubrication. Statically and dynamically balance fan assemblies in fan housing after final assembly. Entire fan assembly shall be completely isolated from the unit bulkhead with neoprene gasketing and mounted on double deflection spring isolators.

H. Insulation: Insulate entire unit casing with UL listed 2" thick neoprene coated glass fiber. Insulate framing angles exposed to air stream. Securely attach insulation with weatherproof adhesive and mechanical fasteners.

    1. Provide insulation with fire-retarding characteristics, complying with NFPA 90A. Insulate drain pans as required to prevent condensate formation on unit exterior at ambient conditions to be encountered.

I. Return Air/Outdoor Air section: Provide 0-100% economizer dampers to allow for modulating 0-100% outdoor air intake. The 0-100% economizer dampers shall consist of outdoor air, return air, and exhaust dampers. Outside air shall be introduced through a horizontal louvered intake hood complete with outdoor air weather hood and bird screen.

J. Dampers: Dampers shall be of the opposed blade type and fabricated from galvanized steel with the blades mounted on 1/2" circular shafts rotating on nylon bushings. Damper blades shall be operated from multiple sets of linkages mounted on the leaving face of the dampers.

K. Pre-filter section: The filter section shall be supplied complete with galvanized steel filter racks as an integral part of the unit. Filters shall be accessible from both sides of the unit. The filter section shall be provided with pleated media pre-filters. Filters shall have scheduled efficiency conforming to ASHRAE standard 52-76 mounted in a galvanized steel frame. The filter section shall be designed for face velocities not to exceed 500 fpm.

L. Bag Filters: Refer to schedule. each filter shall consist of high density glass microfiber media.

M. Electrical Enclosures: Unit shall be include a factory installed separate non-fused disconnect, one each for the supply fan and return fan. The disconnect shall be

mounted on the outside of the unit for single source of power. Disconnects shall be NEMA 3R enclosure for outdoor unit.

PART 3 - EXECUTION

3.01 INSTALLATION

A. Install air-handling units where shown, in accordance with equipment manufacturer's written instructions, and with recognized industry practices, to ensure that units comply with requirements and serve intended purposes.

B. Coordinate with other work, including ductwork, floor construction, roof decking, and piping, as necessary to interface installation of air-handling units with other work.

C. Install units on vibration mounts as shown; comply with manufacturer's indicated installation method if any.

D. Refer to Section 15200 for seismic requirements.

3.02 TESTING

A. Upon completion of installation of air-handling units, start-up and operate equipment to demonstrate capability and compliance with requirements. Field correct malfunctioning units, then retest to demonstrate compliance.

B. At the completion of testing, the Air Handling Unit manufacturer's representative, the VFD manufacturer’s representative, and the HVAC Control Manufacturer’s representative, shall provide a minimum of eight (8) hours training to Sandia Personnel in the operation and maintenance of the HVAC System. The training shall include all necessary manuals, class time and hands-on time to a minimum of six (6) Sandians as selected by the SDR.

END OF SECTION

SECTION 15856

DRY AIR HANDLING UNITS

PART 1 - GENERAL

1.01 RELATED DOCUMENTS

A. Drawings and general provisions of Contract, including General and Supplementary Conditions and Division 1 Specification sections, apply to work of this section as if repeated herein.

1.02 DESCRIPTION

A. Provide dry air handling units as indicated on the drawings, details, and schedules in accordance with the specifications.

B. Sizes, types and performance as indicated in schedules.

C. ARI Certification: Provide central station air-handling units which comply with Air-Conditioning and Refrigeration Institute Standard 430 and display ARI's certification symbols.

D. NFPA Compliance: Comply with applicable provisions of National Electric Code (NFPA No. 70), pertaining to construction and installation of electrically operated components of air-handling units.

E. Flame-Smoke Ratings: Except as otherwise indicated, provide air-handling unit thermal insulation with flame-spread rating of 25 or less, fuel-contributed of 50 or less, and smoke-developed rating of 50 or less.

F. UL Compliance: Provide electric components for air-handling units which have been listed and labeled by Underwriters Laboratories.

G. AMCA Standards: Comply with Air Movement and Control Association Standards 210 and 500 as applicable to testing and rating fans, and testing louvers, dampers, and shutters.

1.03 SUBMITTALS

A. Product Data: Submit manufacturer's technical product data for dry/clean air handling units showing dimensions, weights, capacities, ratings, fan performance with operating point clearly indicated, motor electrical characteristics, gages and finishes of materials, and installation instructions.

B. Shop Drawings: Submit assembly-type shop drawings showing unit dimensions, weight loadings, required clearances, construction details, and field connection details.

C. Wiring Diagrams: Submit manufacturer's electrical requirements for power supply wiring to air handling units. Submit manufacturer's ladder-type wiring diagrams for interlock and control wiring. Clearly differentiate between portions of wiring that are factory-installed and portions to be field-installed.

D. Maintenance Data: Submit maintenance instructions, including instructions for lubrication, filter replacement, motor and drive replacement, and spare parts lists. Include this data, product data, shop drawings, and wiring diagrams in maintenance manuals; in accordance with requirements of Section 15010 "BASIC MECHANICAL REQUIREMENTS".

E. Documentation:

1. Submittals shall include the following:

a. Technical Data Sheet containing design operating inlet and outlet conditions, air flow indicator settings, electrical power requirements and fan motor data.

b. A System Flow Diagram showing air volumes and conditions throughout the system.

c. A General Arrangement Diagram showing three views of the IDS with overall dimensions, general utility connection locations, ductwork connection points and bolting patterns, total weight and required service or equipment removal clearances.

d. Control Diagrams and Parts Lists showing all electric and electronic circuits, component ratings and any applicable set points.

e. Piping Circuit Diagrams for all piping circuits supplied.

f. Recommended Spare Parts List with long and short term requirements.

PART 2 - PRODUCTS

2.01 DRY AIR HANDLING UNITS

A. General: Provide *Cargoaire* IDS units (Integrated Dehumidification Systems) or approved equal. Sizes, arrangements and capacities shall be as indicated on plans and schedules.

1. IDS units shall be factory preassembled, tested and shipped complete with all components necessary to maintain humidity and temperature control levels independent of load variations within design limit.

2. IDS units shall be designed for year round 24 hr/day service and indoor/outdoor installation requiring only connection of ductwork, utilities and remote sensor/controllers.

3. System air plenums shall be constructed of strain hardened aluminum sheet of 3.2 mm *(.125 inch)* minimum thickness. Welded plenum structures shall be air and vapor tight with all connecting sections and penetrations gasketed and sealed as required to meet specified performance at design pressures.

4. Supply inlet and outlet duct connection openings shall have bolt patterns with 6.4 mm *(1/4)-* 20 threaded holes. Reactivation inlet and outlet openings provided with flanges and back clearance shall have 7.9 mm *(5/16")* through holes.

5. Internal air treatment components and controls shall be removable through access panels without dismantling plenums or ductwork.

6. Access panels for filter, coil and fan service and control adjustment shall be quick release type with captive hardware. Access panels shall be labeled and furnished with resilient gaskets mating to knife edge to preserve the air and vapor tight integrity of the system.

7. System air plenums shall be internally insulated to provide a maximum thermal conductivity of 1.53 w/m^2/k per 25 mm thickness *(0.27 Btu/h/sq ft/^oF per inch thickness)* with a flammability rating not to exceed XE 0.9 In., 68 Sec. by ASTM Test Method 01692-67T.

8. The IDS manufacturer shall provide a factory field service technician for start-up supervision and instruction of operating personnel.

B. Performance:

1. A humidity set point less than 10% RH, shall be maintained by modulating process air flow through and around a *Cargocaire HoneyCombe* Industrial Dehumidifier of type, size and capacity shown in schedules.

2. At reduced humidity loads a humidity sensor/controller, furnished by the IDS manufacturer, shall provide a proportionally reduced control signal. electronic damper actuators shall then open up a pressure balanced bypass and close down air flow to the dehumidifier.

3. With increased humidity loads, the process shall be reversed, opening up air flow to the dehumidifier while throttling down bypassed air.

4. The dehumidifier/bypass control dampers shall be sized and balanced to maintain a constant delivered air volume rate within +/- 5%, independent of damper modulation in response to humidity load changes.

5. Reactivation energy shall be automatically reduced at lower than design humidity loads, conserving gas utilities.

6. Temperature control to maintain a set point for a delivered air stream or control level in a space shall be achieved by modulating final cooling and/or heating coils.

7. There shall be no overlap of cooling/heating functions.

C. Dehumidifier and Control Components:

1. Dehumidifiers shall be of design and construction proven in the field by minimum of four years operating performance.

2. Dehumidifier shall be of desiccant type utilizing a fabricated extended surface contact media without the use of bulk or liquid desiccants. The dehumidifier shall be provided factory complete with controls, blowers, HoneyCombe wheel and contact seals in an operation ready package without requiring field assembly.

3. The rotary structure shall consist of 100% inert silicates impregnated with an inorganic, non-granular, crystalline desiccant which transfers water in the vapor phase. The design shall assure laminar air flow through the structure for minimum pressure loss with maximum transfer surface.

4. The dehumidifier shall include an all aluminum air and vapor tight housing with desiccant wheel and drive system, process and reactivation air flow indicating gauges, a wheel rotation inspection window, reactivation heaters for natural gas with AGA gas train, reactivation fan/motor assembly, reactivation energy modulation system, electric/mechanical rotation fault circuitry, straight through process arrangement, a factory wired NEMA 12 control enclosure including door disconnect, filter clog alarm circuits, power on and run indicating lights and all controls for safe and automatic operation. All wiring shall be in accordance with latest revision of N.E.C.

D. Air Moving Components:

1. Fans shall be single width, single inlet, backward inclined air-foil bladed. Blower shafts shall not operate higher than 80% of first critical speed.

2. All blowers shall be vibration isolated and factory balanced such that maximum displacement in any plane does not exceed 1.5 mils for fans operating at or below 2000 rpm or 1.0 mil above 2000 rpm.

3. Isolation efficiency shall not be less than 95% at design rpm.

E. Coils: Chilled water and hot water.

1. As indicated in schedules final and/or pre-cooling coils shall be chilled water type constructed with 16 mm *(5/8")* O.D., 1.2 mm *(.049")* seamless copper tubes mechanically expanded for a compression bond to aluminum fins. Chilled water coils shall be counterflow circuited with water velocities not exceeding 2.13 m/s *(7 fps).* Face air flow velocities shall not exceed 2.3 m/s *(450 fpm)*.

2. Coil assemblies shall include 1.6 mm *(16 gauge)* galvanized steel casings with a support mounting structure that permits coil removal through side access after breaking pipe connections and removing a maximum of six (6) bolts. Assemblies shall include a welded in place, insulated drain pan complete with exterior trap. Coils shall be completely piped, factory tested and insulated.

F. Piping:

1. Gas and water piping systems shall be complete within the system. Gas systems shall include shut-off valves, and drip-legs. Water systems include shut off valves, 3-way mixing valves, balancing valves, drain valves, thermometers and pressure taps. All piping shall be insulated after being tested two hours for integrity at 1.5 times the design working pressure.

G. Dampers:

1. Supply and return air inlets shall include manual balancing dampers with position indicating quadrants and locking hardware. All supply air dampers shall have galvanized steel frames and double wall blades with elastomer edge seals and stainless steel end seals. Face and bypass dampers for humidity control shall have adjustable linkage connections located in easy access compartment isolated from air stream with electronic proportioning actuators.

H. Filters:

1. Filters are specified in Section 15885 "AIR CLEANING".

I. Frequency Invertors:

1. Frequency invertors are specified in section 15175 "VARIABLE SPEED MOTOR CONTROLLERS."

J. Air Flow Monitoring Probe (AFMP(VP))

1. Air flow monitoring probes are specified in section 15975 "DIRECT DIGITAL CONTROL ENERGY MANAGEMENT SYSTEM."

K. Temperature Air Flow and Humidity Controllers:

1. Controllers shall be electronic plug-in modules with one or two output control signals of zero to 20 volts DC. Controllers shall have an accuracy of equal or less than 0.5% of measured range. Controllers shall have a selector switch for selection of P, PD, PI and PID control action. Each controller shall have a filter on each input which attenuates frequencies above 5 hertz at the rate of at least 40 decibels per decade.

2. Controllers shall utilize plug-in modules for local digital setpoint and digital indication of measured inputs. Duplicate setpoint and indication modules shall be capable of remote mounting in panels where indicated on the plans.

L. Modulating Control Valves:

1. Control valves shall be 3-way proportion operation with operating signal matched to the positioning controller. Valves shall have cast iron bodies and chrome nickel steel seats. Valves 50 mm *(2")* or smaller shall have screwed connections.

M. Damper Actuators:

1. Damper actuators shall be modulating or 2-position operation as indicated on the plans. Actuators shall have spring-return drive shafts. Proportioning actuators shall have an operating signal matched to the positioning controller.

N. Differential Pressure Switches:

1. Fan and filter differential pressure switches shall be equal to Dwyer Model Series 1910. Units shall be mounted with isolation and nulling hand valves.

O. Remote Control Panels:

1. Remote control panels for equipment status and alarms, start/stop, setpoint adjustment and digital readout modules shall be factory fabricated and provided. Panels shall be UL listed control cabinets equal to Hofman Engineering Company design line Bulletin D-5 NEMA 13 with hinged, locking door.

2. Status and alarm pilot lights shall be miniature oil-tight type with push-to-test feature.

3. Start and stop selector switch shall be miniature oil-tight type with contacts rated for the application.

4. Devices shall be factory wired to terminal strips with line and low voltage wiring properly segregated. All wiring shall be tagged with a slip-on plastic marker for identification and future servicing.

PART 3 - EXECUTION

3.01 INSTALLATION

A. Install air-handling units where shown, in accordance with equipment manufacturer's written instructions, and with recognized industry practices, to ensure that units comply with requirements and serve intended purposes.

B. Coordinate with other work, including ductwork, floor construction, roof decking, and piping, as necessary to interface installation of air-handling units with other work.

C. Install units on vibration mounts as shown; comply with manufacturer's indicated installation method if any.

D. Refer to Section 15200 for seismic requirements.

3.02 TESTING AND TRAINING

A. Upon completion of installation of air-handling units, start-up and operate equipment to demonstrate capability and compliance with requirements. Where possible, field correct malfunctioning units, then retest to demonstrate compliance.

B. Units shall be tested in accordance with manufacturer's recommended procedure and Section 15990, for all performance parameters. Submit three copies of complete performance tests to Sandia Delegated Representative.

C. Train Sandia's operating personnel in the operation and maintenance of the units.

END OF SECTION

SECTION 15860

CENTRIFUGAL FANS

PART 1 - GENERAL

1.01 RELATED DOCUMENTS

A. Drawings and general provision of Contract, including General and Supplementary Conditions and Division 1 Specification sections, apply to work of this section as if repeated herein.

1.02 DESCRIPTION

A. Extent of centrifugal fans work required by this section is indicated on drawings and schedules, and by requirements of this section.

B. Types of centrifugal fans required for project include the following:

1. Backward-inclined centrifugal fans
2. Forward-inclined centrifugal fans
3. Airfoil centrifugal fans
4. Radial centrifugal fans
5. Tubular centrifugal fans
6. Inline centrifugal fans
7. Plug-type unhoused centrifugal fans

1.03 QUALITY ASSURANCE

A. Manufacturer's Qualifications: Firms regularly engaged in manufacture of centrifugal fans, of types and sizes required, whose products have been in satisfactory use in similar service for not less than 5 years.

B. Codes and Standards:

1. AMCA Compliance: Provide axial fans bearing the AMCA Certified Ratings Seal

2. ASHRAE Compliance: Test and rate axial fans in accordance with ASHRAE 51 (AMCA 210) "Laboratory Methods of Testing Fans for Rating".

3. UL Compliance: Provide axial fan electrical components which have been listed and labeled by UL.

1.04 SUBMITTALS

A. Product Data: Submit manufacturer's technical product data for centrifugal fans, including specifications, capacity ratings, fan performance curves with operating point clearly indicated, gages and finishes of materials, dimensions, weights, accessories furnished, and installation instructions.

B. Shop Drawings: Submit assembly-type shop drawings showing unit dimensions, required clearances, construction details, and field connection details.

C. Wiring Diagrams: Submit manufacturer's electrical requirements for power supply wiring to fan units.

D. Maintenance Data: Submit 3 copies of maintenance instructions, including lubrication instructions, motor and drive replacement, and spare parts lists. Include this data, product data, shop drawings, and wiring diagrams in maintenance manuals; in accordance with requirements of Section 15010.

1.05 DELIVERY, STORAGE, AND HANDLING

A. Deliver centrifugal fans with factory-installed shipping skids and lifting lugs; pack components in factory-fabricated protective containers. Handle centrifugal fans carefully to avoid damage to components, enclosures and finish. Do not install damaged components; replace and return damaged components to axial fan manufacturer. Store centrifugal fans in clean dry place and protect from weather and construction traffic.

B. Comply with manufacturer's rigging and installation instructions for unloading centrifugal fans, and moving them to final location.

PART 2 - PRODUCTS

2.01 ACCEPTABLE MANUFACTURERS

A. Chicago Blower, Hartzell Fan, or equal

2.02WHEEL AND INLET

A. Backward Inclined: Steel *[or aluminum]* construction with smooth curved inlet flange, heavy backplate, backwardly-curved blades, welded or riveted to flange and backplate; cast iron *[or cast steel]* hub riveted to backplate and keyed to shaft with set screws.

B. Forward Curved: *[Black enameled]* [Galvanized] steel construction with inlet flange, backplate, shallow blades with inlet and tip curved forward in direction of airflow, mechanically secured to flange and backplate; steel hub swaged to backplate and keyed to shaft with set screw.

C. Airfoil Wheel: Steel construction with smooth curved inlet flange, heavy backplate die-formed, hollow airfoil-shaped blades continuously welded at tip flange, and backplate; cast iron *[or cast steel]* hub riveted to backplate and keyed to shaft with set screws.

D. Radial: Steel construction with [inlet flange,] heavy *[reinforced]* backplate, plate blades *[with reinforcing gussets]*, [*and] [wearing strips]* welded or riveted to backplate *[and flange]*; cast iron *[or cast steel]* hub riveted to backplate and keyed to shaft with set screws.

2.03HOUSING

A. Heavy-gauge steel, *[spot welded for classI and II fans] [and] [continuously welded for classIII fans]* in accordance with AMCA99 designations; adequately braced, and designed to minimize turbulence with spun-inlet bell and shaped cut-off.

B. Factory finish before assembly with enamel or prime coat. Fans handling air downstream of humidifiers *[shall receive two additional coats of paint.] [shall be fabricated of galvanized steel.]* Prime coating aluminum parts is not required.

C. Provide bolted construction with horizontal-flanged, split housing where indicated on the drawings.

D. Fabricate plug fans without volute housing, with lined steel cabinet. Refer to Section15250, "MECHANICAL INSULATION."

2.04 MOTORS AND DRIVES

A. Motors: Provide energy efficient motors in accordance with Division 15 Section "ELECTRICAL REQUIREMENTS FOR MECHANICAL EQUIPMENT".

B. Bearings: Provide grease-lubricated bearings selected for minimum average life (AFBMA L_{50}) of 200,000 hours at maximum catalogued operating conditions. Extend grease lines to outside of housing.

C. Shafts: Hot-rolled steel, ground and polished, with key-way, protectively coated with lubricating oil. Size for first critical speed.

D. V-Belt Drive: Cast iron or steel sheaves, dynamically balanced, and keyed. Provide variable and adjustable pitch sheaves for motors 11 kw *(15 hp)* and under, selected so required rpm is obtained with sheaves set at mid-position. Provide fixed sheave for 15 kw *(20hp)* and over, with matched belts, and drive rated as recommended by manufacturer, or minimum 1.5times nameplate rating of the motor. Provide multiple belts where motor is larger than 7.5 kw *(10hp)*, such that fan continues to operate with one broken belt.

E. Belt Guard: Fabricate to SMACNA HVAC Duct Construction Standards; of 2.8 mm *(12 gauge)*, 20 mm *(3/4inch)* diamond-mesh wire screen welded to steel angle frame or equivalent, prime coated. Secure to fan or fan supports without short circuiting vibration isolation, with provision for adjusting belt tension, lubrication, and use of tachometer with guard in place.

2.05 ACCESSORIES

A. Fixed Inlet Vanes: Steel construction with fixed cantilevered inlet-guide vanes welded to inlet bell.

B. Adjustable Inlet Vanes: Steel construction with blades *[supported at both ends,] [cantilevered,]* with two permanently-lubricated bearings, variable mechanism *[out of airstream]* terminating in single-control lever with control shaft for double-width fans *[and locking quadrant]*.

C. Discharge Dampers: *[Parallel] [Opposed]*-blade heavy-duty steel damper assembly with blades constructed of two plates formed around and welded to shaft; channel frame, sealed ball bearings, and blades linked out of airstream to single-control lever.

D. Inlet/Outlet Screens: Galvanized-steel welded grid.

E. Access Doors: Shaped to conform to scroll with quick-opening latches and gaskets.

F. Scroll Drain: 15 mm *(1/2-inch)* steel pipe coupling, welded to low point of fan scroll.

PART 3EXECUTION

3.01 INSTALLATION OF CENTRIFUGAL FANS

A. Examine areas and conditions under which centrifugal fans are to be installed. Do not proceed with work until unsatisfactory conditions have been corrected, in manner acceptable to Installer.

B. Install centrifugal fans where indicated, in accordance with manufacturer's installation instructions and with recognized industry practices, to ensure that centrifugal fans comply with requirements and serve intended purposes. Provide access and service space around and over centrifugal fans as indicated, but in no case less than that recommended by manufacturer.

C. Provide sheaves required for final air balance.

D. Provide safety screen where inlet or outlet is exposed.

E. Pipe scroll drains to nearest floor drain.

F. Provide backdraft dampers on discharge of exhaust fans.

3.02 FIELD QUALITY CONTROL

A. Upon completion of installation of axial fans, and after motor has been energized with normal power source, test equipment to demonstrate compliance with requirements. Where possible, field correct malfunctioning equipment, then retest to demonstrate compliance. Replace equipment which cannot be satisfactorily corrected.

3.03 ADJUSTING AND CLEANING

A. Start-up, test, and adjust axial fans in presence of manufacturer's authorized representative.

3.04 SPARE PARTS

A. Furnish to Sandia, with receipt, one spare set of belts for each belt driven centrifugal fan.

END OF SECTION

SECTION 15865

AXIAL FANS

PART 1 - GENERAL

1.01 RELATED DOCUMENTS

A. Drawings and general provision of Contract, including General and Supplementary Conditions and Division 1 Specification sections, apply to work of this section as if repeated herein.

1.02 DESCRIPTION

A. Extent of axial fans work required by this section is indicated on drawings and schedules, and by requirements of this section.

B. Types of axial fans required for project include the following:

1. Propeller fans
2. Duct Axial fans

1.03 QUALITY ASSURANCE

A. Manufacturer's Qualifications: Firms regularly engaged in manufacture of axial fans, of types and sizes required, whose products have been in satisfactory use in similar service for not less than 5 years.

B. Codes and Standards:

1. AMCA Compliance: Provide axial fans bearing the AMCA Certified Ratings Seal

2. ASHRAE Compliance: Test and rate axial fans in accordance with ASHRAE 51 (AMCA 210) "Laboratory Methods of Testing Fans for Rating".

3. UL Compliance: Provide axial fan electrical components which have been listed and labeled by UL.

1.04 SUBMITTALS

A. Product Data: Submit manufacturer's technical product data for axial fans, including specifications, capacity ratings, fan performance curves with operating point clearly indicated, gages and finishes of materials, dimensions, weights, accessories furnished, and installation instructions.

B. Shop Drawings: Submit assembly-type shop drawings showing unit dimensions, required clearances, construction details, and field connection details.

C. Wiring Diagrams: Submit manufacturer's electrical requirements for power supply wiring to fan units.

D. Maintenance Data: Submit 3 copies of maintenance instructions, including lubrication instructions, motor and drive replacement, and spare parts lists. Include this data, product data, shop drawings, and wiring diagrams in maintenance manuals; in accordance with requirements of Section 15010.

1.05 DELIVERY, STORAGE, AND HANDLING

A. Deliver axial fans with factory-installed shipping skids and lifting lugs; pack components in factory-fabricated protective containers. Handle axial fans carefully to avoid damage to components, enclosures and finish. Do not install damaged components; replace and return damaged components to axial fan manufacturer. Store axial fans in clean dry place and protect from weather and construction traffic.

B. Comply with manufacturer's rigging and installation instructions for unloading axial fans, and moving them to final location.

PART 2 - PRODUCTS

2.01 PROPELLER FANS

A. General: Provide propeller fans of size and arrangement as indicated, and of capacities and having accessories as scheduled.

B. Fan Units: Provide factory-fabricated and tested fan units consisting of fan blades, hub, housing, orifice ring, motor, and drive.

C. Housings: Construct of galvanized sheet steel with flanged edges, and integral orifice ring. Provide roof mounted enclosure where indicated.

D. Wheels: Provide welded steel construction fan blades with spun steel spider bolted to cast-iron hub.

E. Motors and Drives: Provide direct or belt driven fans as scheduled. Provide pillow block bearings for belt driven fans, flanged-type bearings for direct drive units. Provide adjustable pitch sheaves, selected for 1.2 service factor for belt driven fans. Provide open, single speed motors unless otherwise indicted. Motors shall be energy efficient type.

F. Accessories: Provide the following accessories as indicated and/or scheduled.

1. Belt Guards: Provide expanded metal belt guards with reinforced edges.

G. Manufacturer: Subject to compliance with requirements, provide propeller fans of one of the following:

Acme Engineering and Manufacturing Corporation
Aerovent, Inc.
American Coolair Corp.
Carnes Co.
Chicago Blower
Cook (Loren) Co.
Greenheck Fan Corp.
Hartzell Fan, Inc.
ILG Industries
New York (The) Blower Co.
Penn Ventilator Co., Inc.
Power Line Fans; Torin HVAC Div. Clevepak Corp.

2.02 DUCT AXIAL FANS

A. General: Provide duct axial fans of size and arrangement as indicated, and of capacities and having accessories as scheduled.

B. Housings: Provide minimum 1.9 mm *(14-gauge)* steel housing with integral inlet bell and diffuser sections. Provide outer frame for mounting, and slip-joint connections on inlet and outlet. Cover housing and frame with manufacturer's standard protective finish on both sides.

C. Wheels: Axial flow type with airfoil shaped blades mounted on wheel plate. Provide dynamic balance for smooth operation. Provide solid steel shaft keyed to fan wheel.

D. Bearings: Provide grease-lubricated bearings selected for minimum average life (AFBMA L_{50}) of 200,000 hours at maximum catalogued operating conditions. Extend grease lines to outside of housing.

E. Motors: Provide energy efficient motors in accordance with Division 15 Section "ELECTRICAL REQUIREMENTS FOR MECHANICAL EQUIPMENT." Mount motors on adjustable motor base.

F. Drives: Provide V-belt drives, selected for 1.4 service factor. Provide adjustable pitch sheave, selected for midpoint at design conditions.

G. Accessories: Provide the following accessories as indicated and/or scheduled:

1. Vanes: Provide fixed discharge vanes.

2. Flanged Connections: Provide duct flanges on fan inlet and outlet.

3. Coating: Fans in corrosive service, as shown on equipment schedule, shall have Eisen-Heiss coating on all surfaces exposed to corrosive fumes.

H. Manufacturer: Subject to compliance with requirements, provide vaneaxial fans of one of the following:

Chicago Blower Corp.
Cincinnati Blower
Hartzell Fan Inc.
Joy Manufacturing Co.
New York (The) Blower Co.

PART 3 - EXECUTION

3.01 INSTALLATION OF AXIAL FANS

A. Examine areas and conditions under which axial fans are to be installed. Do not proceed with work until unsatisfactory conditions have been corrected, in manner acceptable to Installer.

B. Install axial fans where indicated, in accordance with manufacturer's installation instructions and with recognized industry practices, to ensure that axial fans comply with requirements and serve intended purposes. Provide access and service space around and over axial fans as indicated, but in no case less than that recommended by manufacturer.

C. Support: Provide 100 mm *(4")* high concrete pad under floor-mounted axial fans.

D. Isolation: Set axial fans on vibration isolators, fasten in accordance with manufacturer's installation instructions.

3.02 FIELD QUALITY CONTROL

A. Upon completion of installation of axial fans, and after motor has been energized with normal power source, test equipment to demonstrate compliance with requirements. Where possible, field correct malfunctioning equipment, then retest to demonstrate compliance. Replace equipment which cannot be satisfactorily corrected.

3.03 ADJUSTING AND CLEANING

A. Start-up, test, and adjust axial fans in presence of manufacturer's authorized representative.

3.04 SPARE PARTS

A. Furnish to Sandia, with receipt, one spare set of belts for each belt driven axial fan.

END OF SECTION

SECTION 15870

POWER AND GRAVITY VENTILATORS

PART 1 - GENERAL

1.01 RELATED DOCUMENTS

A. Drawings and general provision of Contract, including General and Supplementary Conditions and Division 1 Specification sections, apply to work of this section as if repeated herein.

1.02 DESCRIPTION

A. Extent of power and gravity ventilator work required by this section is indicated on drawings and schedules, and by requirements of this section.

B. Types of power and gravity ventilators specified in this section include the following

Centrifugal roof ventilators.
Gravity ventilators.
Duct mounted exhaust /transfer fans.

1.03 QUALITY ASSURANCE

A. Manufacturer's Qualifications: Firms regularly engaged in manufacture of power and gravity ventilators, of types and sizes required, whose products have been in satisfactory use in similar service for not less than 5 years.

B. AMCA Compliance: Provide power ventilators which have been tested and rated in accordance with AMCA standards, and bear AMCA Certified Ratings Seal.

C. UL Compliance: Provide power ventilators which are designed, manufactured, and tested in accordance with UL 705 "Power ventilators".

D. NEMA Compliance: Provide motors and electrical accessories complying with NEMA standards. See Section 15030 "ELECTRICAL REQUIREMENTS FOR MECHANICAL EQUIPMENT."

1.04 SUBMITTALS

A. Product Data: Submit manufacturer's technical data for power and gravity ventilators, including specifications, capacity ratings, dimensions, weights, materials, accessories furnished, and installation instructions. Submit assembly-type shop drawings showing unit dimensions, construction details, methods of assembly of components, and field connection details.

B. Maintenance Data: Submit maintenance data and parts list for each type of power and gravity ventilator, accessory, and control. Include this data, product data, shop drawings, and wiring diagrams in maintenance manual; in accordance with requirements of Section 15010.

PART 2 - PRODUCTS

2.01 POWER VENTILATORS

A. General: Except as otherwise indicated, provide standard prefabricated power ventilator units of type and size indicated, modified as necessary to comply with requirements, and as required for complete installation.

B. Centrifugal Roof Ventilators: Provide centrifugal roof type, curb mounted, power ventilators of type, size, and capacity as scheduled, and as specified herein. Centrifugal fan, direct or belt driven as scheduled. Provide aluminum, galvanized steel, or fiberglass weatherproof housings as scheduled. Provide square base to suit roof curb. Provide permanent split-capacitor type motor for direct driven fans; capacitor-start, induction-run type motor for belt driven fans.

1. Electrical: Provide factory-wired non-fusible type disconnect switch at motor in fan housing. Provide thermal overload protection in fan motor. Provide conduit chase within unit for electrical connection.

2. Bird Screens: Provide removable bird screens, 15 mm *(1/2")* mesh, 1.6 mm *(16-ga)* aluminum or brass wire.

3. Dampers: Provide gravity-actuated louvered dampers in curb bases unless indicated otherwise.

4. Prefabricated Roof Curbs: Prefabricated, 2.7 mm *(12-gauge)*, galvanized steel; mitered and welded corners; 50 mm *(2-inch)* thick, rigid, fiberglass insulation adhered to inside walls; built-in cant and mounting flange for flat roof decks; 50 mm *(2-inch)* wood nailer. Size as required to suit roof opening and fan base. Overall height: 300 mm *(12 inches)*.

5. Manufacturer: Subject to compliance with requirements, provide centrifugal roof and wall ventilators of one of the following:

   Greenheck Fan Corp.
   Penn Ventilator Co., Inc.

C. Duct Mounted Exhaust/Transfer Fans: centrifugal, direct drive type. Fan housing shall be constructed of heavy gauge galvanized steel and shall include prepunched mounting brackets. Housing interior shall be lined with 15 mm *(1/2")* acoustical

insulation. Outlet duct collar shall include an aluminum backdraft damper adaptable for horizontal or vertical discharge. Access for wiring shall be external. Motor disconnect shall be internal. Motor shall be mounted on constructed of galvanized steel and dynamically balanced by manufacturer. Fans shall be licensed and bear the AMCA Certified Ratings Seal for sound and air performance and shall be UL Listed and CSA approved. Greenheck Model CSP or equal.

D. Centrifugal Wall Exhausters: centrifugal, direct drive type. Fan housing shall be constructed of heavy gauge galvanized steel and shall include prepunched mounting brackets. Housing interior shall be lined with 15 mm (1/2") acoustical insulation. Outlet duct collar shall include an aluminum backdraft damper adaptable for horizontal or vertical discharge. Access for wiring shall be external. Motor disconnect shall be internal. Motor shall be mounted on constructed of galvanized steel and dynamically balanced by manufacturer. Fans shall be licensed and bear the AMCA Certified Ratings Seal for sound and air performance and shall be UL Listed and CSA approved.

1. Provide wall grille and duct of size and length as required for installation.

2. Manufacturer: Subject to compliance with requirements, provide centrifugal wall exhausters of one of the following:

   Greenheck Fan Corp.
   Penn Ventilator Co., Inc.

2.02 GRAVITY VENTILATORS

A. General: Except as otherwise indicated, provide standard prefabricated gravity ventilator units of type and size indicated, modified as necessary to comply with requirements, and as required for complete installation.

B. Gravity Ventilators: Provide gravity ventilators, hooded type, curb mounted, of size, type and capacity as scheduled, and as specified herein. Stationary, natural draft type. Provide weatherproof housings to match power ventilators in material and finish. Provide square or rectangular base to suit roof curb.

1. Bird Screens: Provide removable bird screens, 15mm *(1/2")* mesh 1.6mm *(16-ga)* aluminum or brass wire.

2. Dampers: Provide gravity actuated louvered dampers in curb unless indicated otherwise.

3. Prefabricated Roof Curbs: Prefabricated, 2.7mm *(12-gauge)*, galvanized steel; mitered and welded corners; 50mm *(2-inch)* thick, rigid, fiberglass insulation adhered to inside walls; built-in cant and mounting flange for flat roof decks;

50mm *(2-inch)* wood nailer. Size as required to suit roof opening and fan base. Overall height: 300mm *(12 inches)*.

4. Manufacturer: Subject to compliance with requirements, provide products of one of the following:

   Greenheck Fan Corp.
   Penn Ventilator Co., Inc.

PART 3 - EXECUTION

3.01 INSPECTION

A. General: Examine Areas and conditions under which power and gravity ventilators are to be installed. Do not proceed with work until unsatisfactory conditions have been corrected.

3.02 INSTALLATION OF POWER AND GRAVITY VENTILATORS

A. General: Except as otherwise indicated or specified, install ventilators in accordance with manufacturer's installation instructions and recognized industry practices to insure that ventilators serve their intended function. Coordinate ventilator work with work of roofing, walls, ceilings and ductwork as necessary for proper interfacing.

3.03 FIELD QUALITY CONTROL

A. Testing: After installation of ventilators has been completed, test each ventilator to demonstrate proper operation of units at performance requirements specified. When possible, field correct malfunctioning units, then retest to demonstrate compliance. Replace units which cannot be satisfactorily corrected.

3.04 ADJUSTING AND CLEANING

A. Cleaning: Clean factory-finished surfaces. Repair any marred or scratched surfaces with manufacturer's touch-up paint.

3.05 SPARE PARTS

A. General: Furnish to Sandia, with receipt, one spare set of belts for each belt drive power ventilator.

END OF SECTION

SECTION 15884

AUTOMATIC ROLL FILTERS

PART 1 - GENERAL

1.01 RELATED DOCUMENTS

A. Drawings and general provision of Contract, including General and Supplementary Conditions and Division 1 Specification sections, apply to work of this section as if repeated herein.

1.02 DESCRIPTION

A. The extent of the roll filter work is indicated on the drawings and schedules, and by requirements of this section.

B. Refer to Division 15 air handling units section for filter boxes and filters associated with air handling units.

1.03 QUALITY ASSURANCE

A. Manufacturer's Qualifications: Firms regularly engaged in manufacture of automatic roll filters of types and sizes required, whose products have been in satisfactory use in similar service for not less than 5 years.

B. NFPA Compliance: Comply with applicable portions of NFPA 90A and 90B, and NEC pertaining to installation of air filters and associated electric wiring and equipment.

C. UL Compliance: Comply with UL Standards 586 and 900 pertaining to safety.

D. ASHRAE Compliance: Comply with provisions of ASHRAE Standard 52-76 for method of testing, and for recording and calculating air flow rates.

1.04 SUBMITTALS

A. Product Data: Submit manufacturer's technical product data including, dimensions, weights, required clearances and access, flow capacity including initial and final pressure drop at rated air flow, efficiency and test method, fire classification, and installation instructions.

B. Shop Drawings: Submit manufacturer's assembly-type shop drawings for filter assemblies indicating dimensions, materials, and methods of assembly of components.

C. Wiring Diagrams: Submit manufacturer's electrical requirements for power supply wiring to air filter units. Submit manufacturer's ladder-type wiring diagram for control wiring. Clearly differentiated between portions of wiring that are factory-installed and portions to be field-installed.

D. Maintenance Data: Submit maintenance data and spare parts lists for each type of filter and rack required. Include this data, product data, shop drawings, and wiring diagrams in maintenance manual; in accordance with requirements of Section 15010: "BASIC MECHANICAL REQUIREMENTS".

PART 2 - PRODUCTS

2.01 ACCEPTABLE MANUFACTURERS

A. Manufacturers: Subject to compliance with requirements, provide automatic roll filters of one of the following:

American Air Filter Company
Cambridge Filter Corporation

2.02 AUTOMATIC ROLL FILTERS

A. Automatic roll filters shall be automatic renewable media type having the capacity indicated in the filter schedule with air velocity of not more than 2.5 m/s *(500 fpm)* across the filter face area.

B. Each filter shall consist of one or more sections as required to handle the air flow/volume. Sections shall be so constructed as to permit bolting together in the field to constitute one single unit. Individual sections shall have a substantial housing or frame to provide a rigid encasement for the media mechanism. All sheet metal parts shall be of corrosion resistant galvanized steel construction.

C. Each filter shall be complete with initial loading of filter media, 0.12 kw *(1/6 HP)* 120/60/1 drive motor with built-in thermal overload protection and integral gear reducer, NEMA 1 control box containing a low voltage transformer for a photo-electric media control circuit, warning light to indicate either supply lamp failure or media runout, and hand-off-auto selector switch. The controls shall be factory wired and interconnected electrically to insure fail safe operation. All factory and field wiring shall meet the requirements of the National Electrical Code.

1. The drive motor shall be actuated by the photoelectric solid state control which shall cause the media to be advanced in small increments only when dust accumulation dictates. The control circuit shall insure that no media is fed when the system is inoperative, shall feed uniform small increments of media for constant dirt load, and not require recalibration if the actual airflow differs from design or if the system is of the variable air volume type. The

photoelectric control shall have an adjustable sensitivity photocell and a fixed intensity light source, permitting field adjustment of control operation.

2. A heavy duty section, including media cover, shall prevent media from being installed backwards, completely enclose the clean media spool and support the spool during media replacement.

3. Rolls of clean media shall be supplied on a tightly wound spool under compression for placement in filter sections in enclosures. As it is introduced into the air stream, it shall automatically expand to a thickness of 50 mm *(2")*with the edges of the media being effectively sealed to reduce "by-passing". The used media shall "take-up" under compression on interchangeable spool.

D. The media shall consist of a pad formed of continuous glass fibers about 0.025mm(.001") in diameter that are fixed in place at each original point of contact with a thermosetting board. The glass fibers shall be progressively smaller in diameter, the smaller and more closely packed fibers being at the air-leaving side. These fibers shall be so located as to form interstices of irregular pattern, through uniform density. The glass fibers shall be bonded at points of contact to avoid channels while in service, providing an efficient, fire-resistant media. The dust holding capacity per square foot of media at a face velocity of 2.5 m/s *(500 FPM)* shall not be less than 98 grams. The average efficiency shall not be less than 83% by the ASHRAE Standard 52-76.

2.03 FILTER GAGES

A. Filter Gages: Dwyer series 2000 magnehelic differential pressure gage with air filter accessories shall be furnished and installed at each filter bank to indicate the resistance of the filters.

Gage No.	Range	Filter Resistance Range
2002-AF	0-2" wg	.3" to 1" wg

2.04 CONSTRUCTION MEDIA

A. Air systems that are operated during the construction period shall be protected by 50 mm*(2")* thick fiber glass media blanket over the face of the filter.

B. Contractor may use the specified media during construction and make a complete replacement with new media at the time of final inspection.

PART 3 - EXECUTION

3.01 INSTALLATION

A. Install air filters and devices of types indicated and where shown in accordance with air filter manufacturer's written instructions and with recognized industry practices to ensure that filters comply with requirements and serve intended purposes. Comply with applicable portions of NFPA 90A and B pertaining to installation of air filters.

B. Coordinate with other work including ductwork and air handling unit work, as necessary to interface installation of filters properly with other work.

C. Install air filter gage pressure tips upstream and downstream of filters to indicate air pressure drop through air filter. Mount filter gages on outside of filter housing or filter plenum, in accessible position.

D. Install electrical devices furnished by manufacturer but not specified to be factory-mounted. Furnish copy of manufacturer's wiring diagram submittal to Electrical Installer. Verify that electrical wiring installation is in accordance with manufacturer's submittal and installation requirements of Division 16 sections.

E. Filter housing as section of an air handling unit shall be factory painted or field painted to match air handling unit cabinet.

3.02 FIELD QUALITY CONTROL

A. Operate installed air filters to demonstrate compliance with requirements. Test for air leakage of unfiltered air while system is operating. Correct malfunctioning units at site, then retest to demonstrate compliance; otherwise remove and replace with new units, and proceed with retesting.

3.03 EXTRA STOCK

A. Provide one spare roll of filter element for each air handling system.

END OF SECTION

SECTION 15885

AIR CLEANING

PART 1 GENERAL

1.01 RELATED DOCUMENTS

A. Drawings and general provision of Contract, including General and Supplementary Conditions and Division 1 Specification sections, apply to work of this section as if repeated herein.

1.02 DESCRIPTION

A. The extent of the air cleaning work is shown on the drawings and in the schedules, and by requirements of this section.

B. Submittal: Submit manufacturer's data on filters including, but not limited to, dimensions, clearances, access, flow-through capacity, pressure drop, media fire classification, and filter media efficiency.

C. This work shall include, but not be limited to, air handling units.

PART 2 PRODUCTS

2.01 PREFILTERS

A. Provide renewable media filter that can be assembled in banks without the use of holding frames. 1.3 mm 18 gage cell frames shall be riveted together to form a bank. double wire grid shall hold the media in place. Media shall be a removable and disposable viscose coated glass mat.

B. Manufacturer: Eco-Air Products, Inc., or approved equal.

2.02 HIGH EFFICIENCY DRY TYPE AIR FILTERS

A. Housing: The filter housing shall be the Sure Seal housing as manufactured by Eco-Air Products, Inc. or approved equal

B. The filter housing shall be completely factory assembled of 16 gauge galvanized steel with turned down flanges on both air entering and air leaving side to facilitate matching to adjacent equipment. The unit shall be weatherproof. The housing shall have a prefilter section which can be serviced without opening the

final filter access door or disturbing the final filter seal. The housing shall be capable of handling both rigid and collapsible type cartridges without any internal modifications. Provide a door at each end. Doors shall utilize perimeter gasketing of neoprene rubber. Latches shall be quick acting, spring loaded, and of noncorrosive materials. Hinges shall be plated. Each filter cartridge shall be independently sealed against its respective gasket surface. The entire periphery of the filter face shall make contact with a continuous gasket surface. Three-quarter inch neoprene rubber gaskets shall be used throughout. Sealing pressure shall be applied through a toggle and cam locking mechanism. Construction shall be suitable for the system pressure.

C. Arrangements and capacities shall be as indicated in the filter schedule.

2.03 HIGH EFFICIENCY PARTICULATE AIR FILTERS

A. Filters shall be Alpha 2000 as manufactured by Eco-Air Products, Inc. or approved equal. Capacities as indicated in the filter schedule. Filters shall be of the high efficiency particulate air (HEPA) type 99.997%. The components shall include cell sides, water-proofed, fire-retardant glass fiber media, separators, bond, and gaskets securely fastened to the filter face. The media shall have a minimum thickness of 0.015" plus or minus .0003" and a minimum tensile strength of 3.0 pounds per inch Each filter shall be individually tested and certified to have an efficiency of not less than 99.997 percent when tested with 0.3 micron dioctylphthalate particles. Filter style code and performance shall be printed on each filter cell.

B. Filter frame shall be Model C or in-line housing, as indicated, with dimensions compatible with the cartridges.

C. Housing shall be designed to allow filter removal in a bag to minimize personnel exposure.

2.04 CONSTRUCTION MEDIA

A. Air systems that are operated during the construction period shall be protected by 2" thick fiberglass media blanket over the face of the filter.

B. Contractor may use the specified media during construction and make a complete replacement with new media at time of final inspection.

2.05 FILTER GAGES

.

A. Dwyer Series 2000 Magnehelic differential pressure gages with air filter accessories shall be furnished and installed at each filter bank to indicate the resistance of the filters.

Gage	Range	Filter Resistance Range
2001-AF	0-1" wg	0.1 to 0.5" wg
2002-AF	0-2" wg	0.3 to 1.0" wg
2004-AF	0-4" wg	1.0 to 3.0" wg (HEPA)

PART 3 EXECUTION

3.01 INSTALLATION

A. Install air filters and devices of types indicated and where shown in accordance with air filter manufacturer's written instructions and with recognized industry practices to ensure that filters comply with requirements and serve intended purposes. Comply with applicable portions of NFPA 90A and B pertaining to installation of air filters.

B. Coordinate with other work including ductwork and air handling unit work, as necessary to interface installation of filters properly with other work.

C. Install air filter gage pressure tips upstream and downstream of filters to indicate air pressure drop through air filter. Calibrate gages after installation.

D. Filter housings as section of an air handling system shall be factory painted or field painted to match air handling unit cabinet.

END OF SECTION

SECTION 15891

METAL DUCTWORK

PART 1 - GENERAL

1.01 RELATED DOCUMENTS

A. Drawings and general provision of Contract, including General and Supplementary Conditions and Division 1 Specification sections, apply to work of this section as if repeated herein.

1.02 DESCRIPTION

A. Extent of metal ductwork is indicated on drawings and in schedules, and by requirements of this section.

B. Refer to SECTION 15250, "MECHANICAL INSULATION", for exterior insulation of metal ductwork and SECTION 15910, "DUCTWORK ACCESSORIES".

C. Refer to SECTION 15200, "SEISMIC PROTECTION FOR MECHANICAL SYSTEMS".

1.03 QUALITY ASSURANCE

A. Manufacturer's Qualifications: Firms regularly engaged in manufacture of metal ductwork products of types, materials, and sizes required, whose products have been in satisfactory use in similar service for not less than 5 years.

B. Codes and Standards:

1. SMACNA Standards: Comply with SMACNA's, "HVAC Duct Construction Standards, Metal and Flexible", for fabrication and installation of metal ductwork. Exception: 0.47 mm *(28 ga)* ductwork not allowed.

2. NFPA Compliance: Comply with NFPA 90A, "Standard for the Installation of Air Conditioning and Ventilating Systems", and NFPA 90B, "Standard for the Installation of Warm Air Heating and Air Conditioning Systems".

1.04 SUBMITTALS

A. Product Data: Submit manufacturer's technical product data and installation instructions for metal ductwork materials and products.

B. Certification: Submit certification that sheet metal complies with ASTM A527, lock forming quality with G90 zinc coating in accordance with ASTM A525 and mill phosphatized for exposed locations.

C. Shop Drawings: Submit scaled layout drawings of metal ductwork and fittings including, but not limited to, duct sizes, locations, elevations, and slopes of horizontal runs, wall and floor penetrations, and connections. Show interface and spatial relationship between ductwork and proximate equipment. show modifications of indicated requirements, made to conform to local shop practice, and how those modifications ensure that free area, materials, and rigidity are not reduced. See Section 15010.

D. Record drawings: At project closeout, submit record drawings of installed metal ductwork and ductwork products, in accordance with requirements of Section 15010.

E. Maintenance Data: Submit maintenance data and parts lists for metal ductwork materials and products. Include this data, product data, shop drawings, and record drawings in maintenance manual; in accordance with requirements of Section 15010.

1.05 DELIVERY, STORAGE, AND HANDLING

A. Protection: Protect shop-fabricated and factory-fabricated ductwork, accessories and purchased products from weather, damage during shipping, storage and handling. Prevent end damage and prevent dirt and moisture from entering ducts and fittings.

PART 2 - PRODUCTS

2.01 DUCTWORK MATERIALS

A. Exposed Ductwork Materials: Where ductwork is exposed to view in occupied spaces, provide materials which are free from visual imperfections including pitting, seam marks, roller marks, stains and discolorations, and other imperfections, including those which would impair painting.

B. Sheet Metal: Except as otherwise indicated, fabricate ductwork from galvanized sheet steel complying with ASTM A527, lock forming quality; with G90 zinc coating in accordance with ASTM A525; and mill phosphatized for exposed locations. Sheet metal shall be 0.55 mm *(26 gauge)* or heavier.

2.02 MISCELLANEOUS DUCTWORK MATERIALS

A. General: Provide miscellaneous materials and products of types and sizes indicated and, where not otherwise indicated, provide type and size required to

comply with ductwork system requirements including proper connection of ductwork and equipment.

B. Ductwork dimension shown on drawings are sheet metal dimensions. Net free area shall be sheet metal dimensions less the liner thickness on lined ductwork.

C. Duct Sealant: Seal all joints and seams of rectangular, round and oval ducts with an elastomeric non-hardening, non-migrating, explosion-proof, fire resistant mastic or liquid elastic sealant. Flame spread rating not to exceed 10 smoke rating not to exceed 75 and fuel contributed 0. Sheet Metal Products Co. high velocity duct sealer or equal.

D. Ductwork Support Materials: Except as otherwise indicated, provide hot-dipped galvanized steel fasteners, anchors, rods, straps, trim and angles for support of ductwork.

E. Insulated Flexible Duct: Constructed of a strong compressible spring steel wire helix, encapsulated in a 2-ply, air tight inner core. R4.2 fiberglass insulation encompasses the core and a black polyethylene vapor barrier surrounds the entire duct. Temperature Range: 0-82.2 deg. C *(0-180 F)*; Working Pressure: 0 to plus 4" w.g.; Velocity: To 20.3 m/s*(4000 FPM)*; Thermal Conductance: C = .23; Code Compliance: UL-181, NFPA 90A and 90B. JP Lamborn Co. Model PR-25 or equal.

2.03 FABRICATION

A. Shop fabricate ductwork in 1220, 2440, 3050, 3660-mm *(4, 8, 10 or 12-ft)* lengths, unless otherwise indicated or required to complete runs. Preassemble work in shop to greatest extent possible, so as to minimize field assembly of systems. Disassemble systems only to extent necessary for shipping and handling. Match-mark sections for reassembly and coordinated installation.

1. Ductwork dimensions shown on drawings are sheet metal dimensions.

B. Shop fabricated ductwork of gages and reinforcement complying with SMACNA, "HVAC Duct Construction Standards". Work metal with mill markings outside and visible after fabrication.

C. Seal all ductwork joints and seams in pressure classification under 4" WC. Weld all ductwork joints and seams in pressure classification of 4" WC and above. All positive pressure exhaust ducts shall be welded.

D. Fabricate duct fittings to match adjoining ducts, and to comply with duct requirements as applicable to fittings. Except as otherwise indicated, fabricate elbows with center-line radius equal to associated duct width; and fabricate to

include turning vanes in elbows. Mitered elbows shall have turning vanes. Limit angular tapers to 30° for contracting tapers and 20° for expanding tapers.

E. Fabricate ductwork with accessories installed during fabrication to the greatest extent possible. Refer to Division 15, Section 15910, "DUCTWORK ACCESSORIES", for accessory requirements.

F. Fabricate ductwork with duct liner in each section of duct where indicated. Laminate liner to internal surfaces of duct in accordance with instructions by manufacturers of lining and adhesive, and fasten with mechanical fasteners.

2.04 FACTORY-FABRICATED LOW PRESSURE DUCTWORK (2" WG AND LESS)

A. General: At installer's option, provide factory-fabricated duct and fittings, in lieu of shop-fabricated duct and fittings.

B. Material: Galvanized sheet steel complying with ASTM A527, lock forming quality, with ASTM A525, G90 zinc coating, mill phosphatized.

C. Gage: 0.55 mm *(26-gage)* minimum for round and oval ducts and fittings, 100 thru 660 mm *(4" through 26")* diameter; 0.7 mm *(24-gage)* for 690 thru 915 mm *(27 thru 36").*

D. Elbows: One piece construction for 90° and 45° elbows 355 mm *(14")* and smaller. Provide multiple gore construction for larger diameters with standing seam circumferential joint.

E. Divided Flow Fittings: 90° tees, constructed with saddle tap spot welded and bonded to duct fitting body.

F. Seal all ductwork joints and seams without regard to pressure classification.

G. Available Manufacturers: Subject to compliance with requirements, manufacturers offering factory-fabricated ductwork which may be incorporated in the work include, but are not limited to, the following:

Semco Mfg., Inc.
United Sheet Metal Div., United McGill Corp.

2.05 FACTORY-FABRICATED HIGH PRESSURE DUCTWORK (ABOVE 2" WG)

A. General: At installer's option, provide factory-fabricated duct and fittings, in lieu of shop-fabricated duct and fittings.

B. Round Ductwork: Construct of galvanized sheet steel complying with ASTM A527 by the following methods and in minimum gages listed.

Diameter(mm)	Longitudinal Minimum(mm)	Spiral(mm)
80 to 355	0.7	0.55
380 to 660	0.85	0.7
690 to 915	1.0	0.85
940 to 1270	1.0	1.0

1295 to 1525	1.3	1.3
Over 1525	1.6	1.3

Diameter	*Longitudinal Minimum*	*Spiral*
3" to 14"	*24*	*26*
15" to 26"	*22*	*24*
27" to 36"	*20*	*22*
37" to 50"	*20*	*20*
51" to 60"	*18*	*18*
Over 60"	*16*	*18*

1. Provide locked seams for spiral duct; fusion-welded butt seam for longitudinal seam duct.

2. Fittings and Couplings: Construct of minimum gages listed. Provide continuous welds along seams.

Diameter(mm)	Minimum Gage(mm)
80 to 915	1.0
965 to 1270	1.3
Over 1270	1.6

Diameter	*Minimum Gage*
3" to 36"	*20*
8" to 50"	*18*
Over 50"	*16*

C. Flat-Oval Ductwork: Construct of galvanized sheet steel complying with ASTM A527, of spiral lock seam construction, in minimum gages listed.

Maximum Width(mm)	Longitudinal(mm)	Spiral(mm)
Under 600	1.0	0.7
635 to 1425	1.0	0.85
940 to 2400	1.3	0.85
245 to 1525	1.3	1.0
1550 to 1780	1.6	1.0
over 1780	1.6	1.3

Maximum Width	*Longitudinal*	*Spiral*

Under 24"	*20*	*24*
25" to 56"	*20*	*22*
37" to 48"	*18*	*22*
49" to 60"	*18*	*2 0*
61" to 70"	*16*	*20*
over 70"	*16*	*18*

1. Fittings and Couplings: Construct of minimum gages listed. Provide continuous weld along seams.

Maximum Width(mm)	Minimum Gage(mm)
Under 940	1.0
940 to 1525	1.3
Over 1525	1.6

Maximum Width	*Minimum Gage*
Under 37"	*20*
37" to 60"	*18*
Over 60"	*16*

PART 3 - EXECUTION

3.01 INSPECTION

A. General: Examine areas and conditions under which metal ductwork is to be installed. Do not proceed with work until unsatisfactory conditions have been corrected in manner acceptable to installer.

3.02 INSTALLATION OF METAL DUCTWORK

A. General: Assemble and install ductwork in accordance with recognized industry practices which will achieve air-tight (5% leakage for systems rated 3" W.C. and under; 1% for systems rated over 3" W.C.) and noiseless (no objectionable noise) systems, capable of performing each indicated service. Install each run with minimum number of joints. Align ductwork accurately at connections, within 3.2mm *(1/8")* misalignment tolerance with internal surfaces smooth. Support ducts rigidly with suitable ties, braces, hangers and anchors of type which will hold ducts true-to-shape and to prevent buckling. Support vertical ducts at every floor. Ducts shall be suspended independently of other systems.

B. Inserts: Install concrete inserts for support of ductwork in coordination with formwork, as required to avoid delays in work.

C. Field Fabrication: Complete fabrication of work at project as necessary to match shop-fabricated work and accommodate installation requirements.

D. Routing: Locate ductwork runs, except as otherwise indicated, vertically and horizontally and avoid diagonal runs wherever possible. Locate runs as indicated by diagrams, details and notations or, if not otherwise indicated, run ductwork in shortest route which does not obstruct usable space or block access for servicing building and its equipment. Hold ducts close to walls, overhead construction, columns, and other structural permanent enclosure elements of building. Limit clearance to 15mm *(1/2")* where furring is shown for enclosure or concealment of ducts, but allow for insulation thickness, if any. Where possible, locate insulated ductwork for 25mm *(1")* clearance outside of insulation. Where possible in finished and occupied spaces, conceal ductwork from view, by locating in mechanical shafts, hollow wall construction or above suspended ceilings. Do not encase horizontal runs in solid partitions, except as specifically shown. Coordinate layout with suspended ceiling and lighting layouts and similar finished work.

E. Electrical Equipment Spaces: Do not route ductwork through or over transformer vaults and their electrical equipment spaces and enclosures.

F. Penetrations: Where ducts pass through interior partitions and exterior walls, and are exposed to view, conceal space between construction opening and duct or duct insulation with sheet metal flanges of same gage as duct. Overlap opening on 4 sides by at least 40 mm *(1 1/2")*. Fasten to duct and substrate. Where ducts pass through fire-rated floors, walls, or partitions, provide fire stopping between duct and substrate, in accordance with requirements of Division 7, Section "Fire stopping".

G. Coordination: Coordinate duct installations with installation of accessories, dampers, coil frames, equipment, controls and other associated work of ductwork system.

H. Installation: Install metal ductwork and duct liner in accordance with SMACNA, "HVAC Duct Construction Standards". Hang ducts from structure.

I. Seal all ductwork joints and seams in pressure classifications under 4" WC.

3.03 INSTALLATION OF FLEXIBLE DUCTS

A. Maximum Length: For any duct run using flexible ductwork, do not exceed 6 feet.

B. Installation: Install in accordance with Section III of SMACNA's, "HVAC Duct Construction Standards, Metal and Flexible". Vapor seal between insulated flexible duct and external insulation.

3.04 EQUIPMENT CONNECTIONS

A. General: Connect metal ductwork to equipment as indicated, provide flexible connection for each ductwork connection to equipment mounted on vibration isolators, and/or equipment containing rotating machinery. Provide access doors as indicated.

3.05 ADJUSTING AND CLEANING

A. Clean ductwork internally, unit by unit as it is installed, of dust and debris. Clean external surfaces of foreign substances which might cause corrosive deterioration of metal or, where ductwork is to be painted, might interfere with painting or cause paint deterioration.

B. Temporary Closure: At ends of ducts which are not connected to equipment or air distribution devices at time of ductwork installation, provide temporary closure of polyethylene film or other covering which will prevent entrance of dust and debris until time connections are to be completed.

C. Refer to Section 15990, "TESTING, ADJUSTING, AND BALANCING", for air distribution balancing of metal ductwork. Seal any leaks in ductwork that become apparent in balancing process.

END OF SECTION

SECTION 15895

SPECIAL DUCTWORK SYSTEMS

PART 1 - GENERAL

1.01 RELATED DOCUMENTS

A. Drawings and general provision of Contract, including General and Supplementary Conditions and Division 1 Specification sections, apply to work of this section as if repeated herein.

1.02 DESCRIPTION

A. The extent of the special ductwork systems is indicated on the drawings and by the requirements of this section.

1.03 INDUSTRY STANDARDS

A. Comply with SMACNA (Sheet Metal and Air Conditioning Contractors' National Association) recommendations for fabrication, construction and details, and installation procedures. Exception: 0.47 mm *(28 ga)* ductwork not allowed.

B. Comply with ASHRAE (American Society of Heating, Refrigerating and Air-Conditioning Engineers) recommendations, except as otherwise indicated.

C. Comply with NFPA 45 for ductwork for hoods.

D. Comply with National Fire Protection Association (NFPA) Standards: No. 90A - Air Conditioning and Ventilating Systems; No. 91 - Blower and Exhaust Systems.

E. Comply with SMACNA, "Thermoplastic Duct (PVC) Construction Manual."

1.04 SUBMITTAL

A. Product Data: Submit manufacturer's technical product data and installation instructions for special ductwork materials and products.

B. Certification: Submit certification that material complies with specifications.

C. Shop Drawings: Submit scaled layout drawings of ductwork and fittings including, but not limited to, duct sizes, locations, elevations, and slopes of horizontal runs, wall and floor penetrations, and connections. Show interface and spatial relationship between ductwork and proximate equipment. Show modifications of indicated requirements, made to conform to local shop practice,

and how those modifications ensure that free area, materials, and rigidity are not reduced. See Section 15010.

D. Record Drawings: At project closeout, submit record drawings of installed metal ductwork and ductwork products, in accordance with requirements of Section 15010.

E. Maintenance Data: Submit maintenance data and parts lists for metal ductwork materials and products. Include this data, product data, shop drawings, and record drawings in maintenance manual; in accordance with requirements of Section 15010.

1.05 DELIVERY, STORAGE, AND HANDLING

A. Protection: Protect shop-fabricated and factory-fabricated ductwork, accessories and purchased products from weather, damage during shipping, storage and handling. Prevent end damage and prevent dirt and moisture from entering ducts and fittings.

PART 2 - PRODUCTS

2.01 STAINLESS STEEL SHEET METAL DUCTWORK AND PLENUMS

A. Material: 316 stainless steel with mill polished No. 4 finish, spiral or longitudinal seam, round and flat oval, as indicated.

B. System Pressure: Negative 3" w.g. to positive 2" w.g.

C. Corrosive fumes shall only come in contact with stainless steel and gaskets.

D. Corrosive exhaust ductwork is defined as all ductwork and sheet metal that handles and comes in contact with exhaust air from laboratory fume hoods, gas cylinder cabinets, and gas valve enclosures, except where PVC duct is indicated.

E. Joints: All stainless steel duct work joints and fittings shall be welded. Flanges and collars may be used to connect to fans and other equipment.

F. Round Duct Construction:

1. Round duct shall be 1.0 mm *(20 ga.)* in sizes 1245 mm *(49")* or less and 1.3 mm *(18 ga.)* in sizes 1270 mm *(50")* and larger.

2.02 FLEXIBLE CONNECTIONS

A. Provide flexible connections on the inlet and outlet of each fan and unit to which duct connections are made. Connections shall be made of 850 g *(30 oz.)* Ventfab,

fire, water, chemical, and weather resistant fabric double coated with neoprene. At least one inch slack shall be allowed to ensure that no vibration is transmitted.

2.03 PVC DUCTWORK

A. Materials: Construct ductwork of PVC compounds, in accordance with SMACNA PVC Duct Construction Standard.

1. Manufacturer: Subject to compliance with requirements, provide PVC ductwork materials of one of the following:

Air Plastics, Inc.
Argo Plastic Products Co.
Duall Industries, Inc.
Eastman Chemical Products, Inc.
Harrington Industrial Plastics, Inc.
Harrison Plastic Systems

B. Fabrication: Fabricate ductwork, fittings, and accessories in accordance with SMACNA PVC Duct Construction Standard, using reinforcement as recommended in Standard.

C. Access Doors: Construct access doors in accordance with SMACNA PVC Duct Construction Manual, and locate as indicated.

D. Dampers: Construct volume dampers in accordance with SMACNA PVC Duct Construction Manual, and locate as indicated.

PART 3 - EXECUTION

3.01 INSTALLATION OF DUCTWORK

A. General: Assemble and install ductwork and accessories in accordance with recognized industry practices which will achieve airtight and noiseless systems, capable of performing each indicated service. Install each run with a minimum of joints. Align ductwork accurately at connections, within 3.2mm *(1/8")* misalignment tolerance and with internal surfaces smooth. Support ducts rigidly with suitable ties, braces, hangers and anchors of the type which will hold ducts true-to-shape and prevent buckling.

B. Details of installation shall conform to SMACNA manuals, the recommendations of the duct material manufacturer, and the specifications.

C. Ductwork shall be supported from the structure, where applicable.

D. Coordinate duct installations with installation of accessories, equipment, controls and other associated work of the ductwork system.

3.02 EQUIPMENT CONNECTIONS

A. General: Connect metal ductwork to equipment as indicated, provide flexible connection for each ductwork connection to equipment mounted on vibration isolators, and/or equipment containing rotating machinery. Provide access doors as indicated.

3.03 FIELD QUALITY CONTROL

A. Leakage Tests: After each duct system which is constructed for duct classes over 3" is completed, test for duct leakage in accordance with SMACNA HVAC Air Duct leakage Test Manual. Repair leaks and repeat tests until total leakage is less than 1% of system design air flow.

3.04 ADJUSTING AND CLEANING

A. Clean ductwork internally, unit by unit as it is installed, of dust and debris. Clean external surfaces of foreign substances which might cause corrosive deterioration of metal or, where ductwork is to be painted, might interfere with painting or cause paint deterioration.

B. Strip protective paper from stainless ductwork surfaces, and repair finish wherever it has been damaged.

C. Temporary Closure: At ends of ducts which are not connected to equipment or air distribution devices at time of ductwork installation, provide temporary closure of polyethylene film o other covering which will prevent entrance of dust and debris until time connections are to be completed.

D. Refer to Section 15990, "TESTING, ADJUSTING, AND BALANCING", for air distribution balancing of metal ductwork. Seal any leaks in ductwork that become apparent in balancing process.

END OF SECTION

SECTION 15896

HVAC CASINGS

PART 1 - GENERAL

1.01 RELATED DOCUMENTS

A. Drawings and general provision of Contract, including General and Supplementary Conditions and Division 1 Specification sections, apply to work of this section as if repeated herein.

1.02 DESCRIPTION OF WORK

A. Extent of HVAC casings work is indicated on drawings and in schedules, and by requirements of this section. High pressure casings are subjected to operating pressures over 2" w.g. positive or negative.

B. Types of HVAC casings required for project are high pressure casings to house field-erected air-handling systems.

1.03 QUALITY ASSURANCE

A. Codes and Standards:

1. SMACNA Standards: Comply with SMACNA, "HVAC Duct Construction Standards Metal and Flexible", for fabrication and installation for HVAC casings.

2. ASHRAE Standards: Comply with ASHRAE Handbook, 1983 Equipment Volume, Chapter 1 "Duct Construction", for fabrication and installation of high pressure HVAC casings.

3. NFPA Compliance: Comply with NFPA 90A, "Standard for the Installation of Air-Conditioning and Ventilating Systems", and NFPA 90B, "Standard for the Installation of Warm Air Heating and Air-conditioning Systems".

1.04 SUBMITTAL

A. Product Data: Submit manufacturer's specifications on manufactured products and factory-fabricated HVAC casings, used for work of this section.

B. Shop Drawings: Submit dimensioned layouts of HVAC casings showing both accurately scaled casings and their relation to space enclosure. Show modifications of indicated requirements, made to conform to local shop practice,

and how those modifications ensure that free area, clearances, materials, and rigidity are not reduced.

C. Record Drawings: At project closeout, submit record drawings of installed HVAC casings and accessories; in accordance with requirements of Section 15010 "BASIC MECHANICAL REQUIREMENTS".

PART 2 - PRODUCTS

2.01 FACTORY-FABRICATED CASINGS

A. General: Provide factory-fabricated, double-wall, insulated, pressurized plenum equipment casings as indicated.

B. Panel Construction: Construct panels with solid galvanized steel exterior shell, and solid or perforated galvanized steel interior shell, 100 mm *(4")* thick.

1. Tack or spot weld exterior and interior shells to perimeter and interior longitudinal steel channels and box-end internal closures.

2. Construct exterior shell of 1.0 mm *(20-ga)* minimum galvanized steel.

3. Construct interior shell of 0.85 mm *(22-ga)* minimum galvanized steel.

   Where perforated shell indicated, provide a 2.4 mm *(3/32")* holes on 4.8 mm *(3/16")* staggered spacing for 23% open area.

4. Construct perimeter and interior longitudinal channel members of ASTM A 446 1.3 mm *(18-ga)* structural quality galvanized steel.

5. Provide galvanized steel for panel surfaces, internal channels, and trim items, conforming to ASTM A 526, and having minimum of G-90 coating conforming to ASTM A 525.

6. Fill each panel assembly with 0.68 kg/0.028 cu. m *(1 1/2 lb/cu ft.)* fiberglass acoustical/thermal insulating material that is noncombustible, inert, mildew-resistant, and vermin proof, and conforms to NFPA 90A.

7. Fabricate panels with tongue and groove construction, with continuous self-locking joints effective on both inside and outside of each panel joint interface.

8. Construct septum panels of minimum 1.0 mm *(20-ga)* galvanized sheet sandwiched between layers of insulating material and minimum 0.85 mm *(22-ga)* perforated galvanized exterior sheets.

C. Trim Items: Fabricate from minimum 0.85 mm *(18-ga)* galvanized steel, furnished in standard lengths for field-cutting.

D. Sealer: Furnish duct sealer for all mechanical joints and exterior trim items, conforming to NFPA 90A.

E. Access Doors: construct personnel access doors of minimum 7315 x 1525 mm *(24' x 60")* size, other access doors of size indicated. Construct doors of same thickness as panels, with minimum 1.0 mm *(20-ga)* solid interior and exterior galvanized steel shell. provide minimum of 2 ball-bearing hinges and 2 wedge-lever type latches, operable from both inside and outside. Install doors to open against air pressure differential. Provide neoprene-type gasket around entire perimeter of door frame.

1. Provide windows in doors so indicated, consisting of double glazed wire-reinforced safety glass with air space between and sealed with interior and exterior rubber seals.

F. Structural Performance: Design entire plenum installation to be self-supporting , and capable of withstanding internal static pressures as scheduled, without exceeding deflection of any panel joint of L/200 where "L" is unsupported span length within completed casing structure.

1. Design outdoor casings for wind loading of 105 kpa *(15 psf).*

G. Acoustical Performance: Provide certified testing data from independent acoustical laboratory listing sound absorption and transmission loss characteristics of panel assembly.

1. Test data must show sound absorption coefficients in each octive band less than those scheduled, when tested in accordance with ASTM C 423.

2. Test data must show airborne sound transmission losses less than those scheduled, when tested in accordance with ASTM E 90.

3. Thermal Performance: When measured at mean temperature of 23.8 deg. C *(75°F),* thermal conductivity shall not exceed 0.34 w/m^{2}-k *(0.06 btu/hr-sq ft-^{o}F)* for 100mm(4") thick panels, and 0.68 w/m2-k *(0.12 but/hr-sq ft-^{o}F)* for 50 mm *(2")* thick panels.

4. Manufacturer: Subject to compliance with requirements, provide factory-fabricated casings of one of the following:

Air Enterprises, Inc.
Flakt Products, Inc.

Tempmaster Corp.
United Sheet Metal Div.; United McGill Corp.

PART 3 - EXECUTION

3.01 INSTALLATION OF FACTORY-FABRICATED CASINGS

A. General: Install casings in accordance with manufacturer's installation drawings and instructions. Pay special attention to recommended spacing of sheet metal screws, duct sealer placement, and trim positioning requirements.

B. Sealer: Apply sufficient sealer to allow extrusion of surplus sealer to give visual indication of complete coverage within all external joints.

C. Openings: Field-cut openings for pipe and conduit penetrations, insulate and seal in accordance with manufacturer's instructions.

3.02 CLEANING AND PROTECTION

A. Clean dust and debris from each section of casing as it is installed. Clean external surfaces of foreign substances which might cause deterioration of metal or interface with painting or insulating of casings.

B. Maintain temporary closure of openings into housings until permanently closed by duct connections, equipment installation, and completion of similar work. Cover openings with polyethylene film or other covering which will prevent entrance of moisture, duct and debris.

3.03 TESTING

A. Check installed casings for leakage during system's operational test. Repair seams or replace faulty casings, as required for leakproof performance.

3.04 BALANCING

A. Refer to Division 15, SECTION 15990 "TESTING, ADJUSTING, AND BALANCING" for air distribution balancing. Seal any leaks in HVAC casings that become apparent in balancing process.

END OF SECTION

SECTION 15910

DUCTWORK ACCESSORIES

PART 1 GENERAL

1.01 RELATED DOCUMENTS

A. Drawings and general provision of Contract, including General and Supplementary Conditions and Division 1 Specification sections, apply to work of this section as if repeated herein.

1.02 DESCRIPTION

A. Extent of ductwork accessories work is indicated on drawings and in schedules, and by requirements of this section.

1.03 QUALITY ASSURANCE

A. Manufacturer's Qualifications: Firms regularly engaged in manufacture of ductwork accessories, of types and sizes required, whose products have been in satisfactory use in similar service for not less than 3 years.

B. Codes and Standards:

1. SMACNA Compliance: Comply with applicable portions of SMACNA "HVAC Duct Construction Standards, Metal and Flexible".

2. UL Compliance: Construct, test, and label fire dampers in accordance with UL Standard 555 "Fire Dampers and Ceiling Dampers".

3. NFPA Compliance: Comply with applicable provisions of NFPA 90A "Air Conditioning and Ventilating Systems", pertaining to installation of ductwork accessories.

1.04 SUBMITTALS

A. Product Data: Submit manufacturer's technical product data for each type of ductwork accessory, including dimensions, capacities, and materials of construction; and installation instructions.

B. Shop Drawings: Submit manufacturer's assembly-type shop drawings for each type of ductwork accessory showing interfacing requirements with ductwork, method of fastening or support, and methods of assembly of components.

C. Maintenance Data: Submit manufacturer's maintenance data including parts lists for each type of duct accessory. Include this data, product data, and shop drawings in maintenance manual; in accordance with requirements of Section 15010.

PART 2 PRODUCTS

2.01 DAMPERS

A. Low Pressure Manual Dampers: Provide dampers of single blade type or multiblade type, constructed in accordance with SMACNA "HVAC Duct Construction Standards".

B. Control Dampers: Refer to Division-15 Section 15970 "CONTROLS " for control dampers. Install under this section.

C. Fire dampers shall be installed as shown, and as manufactured by Ruskin Mfg. Co. or approved equal.

2.02 TURNING VANES

A. Manufactured Turning Vanes: Provide turning vanes constructed of 40 mm (11/2") wide curved blades set at 20 mm (3/4") o.c., supported with bars perpendicular to blades set at 50 mm (2") o.c., and set into side strips suitable for mounting in ductwork.

B. Acoustic Turning Vanes: Provide acoustic turning vanes constructed on airfoil shaped aluminum extrusions with perforated faces and fiberglass fill.

C. Manufacturer: Subject to compliance with requirements, provide turning vanes of one of the following:

Aero Dyne Co.
Airsan Corp.
Anemostat Products Div.; Dynamics Corp. of America.
Barber-Colman Co.
Duro Dyne Corp.
Environmental Elements Corp.; Subs. Koppers Co., Inc.

2.03 DUCT HARDWARE

A. General: Provide duct hardware, manufactured by one manufacturer for all items on project, for the following:

1. Test Holes: Provide in ductwork at fan inlet and outlet, and elsewhere as indicated, duct test holes, consisting of slot and cover, for instrument tests.

2. Quadrant Locks: Provide for each damper, quadrant lock device on one end of shaft; and end bearing plate on other end for damper lengths over 300 mm (12"). Provide extended quadrant locks and end extended bearing plates for externally insulated ductwork.

3. Manufacturer: Subject to compliance with requirements, provide duct hardware of one of the following:

   Ventfabrics, Inc.
   Young Regulator Co.

2.04 DUCT ACCESS DOORS

A. General: Provide where indicated, duct access doors of size indicated.

B. Construction: Construct of same or greater gage as ductwork served, provide insulated doors for insulated ductwork. Provide flush frames for uninsulated ductwork, extended frames for externally insulated duct. Provide one size hinged, other side with one handle-type latch for doors 300 mm (12") high and smaller, 2 handle-type latches for larger doors.

C. Manufacturer: Subject to compliance with requirements, provide duct access doors of one of the following:

   Air Balance Inc.
   Duro Dyne Corp.
   Ruskin Mfg. Co.
   Ventfabrics, Inc.
   Zurn Industries, Inc.; Air Systems Div.

2.05 FLEXIBLE CONNECTIONS

A. General: Provide flexible duct connections wherever ductwork connects to vibration isolated equipment. Construct flexible connections of neoprene-coated flameproof fabric crimped into duct flanges for attachment to duct and equipment. Make airtight joint. Provide adequate joint flexibility to allow for thermal, axial, transverse, and torsional movement, and also capable of absorbing vibrations of connected equipment.

B. Manufacturer: Subject to compliance with requirements, provide flexible connections of one of the following:

American/Elgen Co.; Energy Div.
Duro Dyne Corp.
Flexaust (The) Co.
Ventfabrics, Inc.

2.06 DUCT MOUNTED SMOKE DETECTOR

A. Furnished and installed by Division 15, wired by Division 16. See Division 16 for product specification.

2.07 AIR FLOW SWITCHES

A. Paddle style air flow switch.

B. Wire to open circuit to soleniod valve when there is no air flow. Also wire to close circuit to safety system.

C. Minimum air velocity is 350 FPM.

D. NEMA 1 Enclosure.

E. Stainless steel paddle.

F. Temperature range 32°F to 180°F.

G. 120 V 16A

H. UL Listed.

I. McMaster-Carr Model # 1783K12, no substitutions.

PART 3 EXECUTION

3.01 INSTALLATION OF DUCTWORK ACCESSORIES

A. Install ductwork accessories in accordance with manufacturer's installation instructions, with applicable portions of details of construction as shown in SMACNA standards, and in accordance with recognized industry practices to ensure that products serve intended function.

B. Install turning vanes in square or rectangular 90° elbows in supply and exhaust air systems, and elsewhere as indicated.

C. Install access doors to open against system air pressure, with latches operable from either side, except outside only where duct is too small for person to enter.

D. Coordinate with other work, including ductwork, as necessary to interface installation of ductwork accessories properly with other work.

3.02 FIELD QUALITY CONTROL

A. Operate installed ductwork accessories to demonstrate compliance with requirements. Test for air leakage while system is operating. Repair or replace faulty accessories, as required to obtain proper operation and leak proof performance.

3.03 ADJUSTING AND CLEANING

A. Adjusting: Adjust ductwork accessories for proper settings, dampers and adjust for proper action.

1. Label access doors in accordance with Section 15190, "MECHANICAL IDENTIFICATION".

2. Final positioning of manual dampers is specified in Section 15990, "TESTING, ADJUSTING, AND BALANCING".

B. Cleaning: Cleaning factory-finished surfaces. Repair any marred or scratched surfaces with manufacturer's touch-up paint.

END OF SECTION

SECTION 15920

SOUND ATTENUATORS

PART 1 - GENERAL

1.01 RELATED DOCUMENTS

A. Drawings and general provision of Contract, including General and Supplementary Conditions and Division 1 Specification sections, apply to work of this section as if repeated herein.

1.02 DESCRIPTION

A. Provide sound attenuators of the size, type and performance in accordance with the specifications and schedules.

B. Manufacturers: Industrial Acoustics Co. or equal.

C. Submittal shall include manufacturer's catalog data, dimensions, and performance data.

PART 2 - PRODUCTS

2.01 RECTANGULAR DUCT SILENCERS

A. Outer casings of rectangular silencers shall be made of 0.85 mm*(22 gauge)* galvanized steel in accordance with ASHRAE GUIDE recommended construction for high pressure rectangular duct work. Seams shall be lock formed and mastic filled. Interior partitions shall be made of not less than 0.55 mm(*26 gauge)* galvanized perforated steel.

B. Filler material shall be of inorganic mineral or glass fiber of a density sufficient to obtain the specified acoustic performance and be packed under not less than 5% compression to eliminate voids due to vibration and settling. Material shall be inert, vermin-and-moisture-proof.

C. Combustion rating for the silencer acoustic fill shall be not less than the following when tested in accordance with ASTM E 84, NFPA Standard 255 or UL No. 723:

Flame spread Classification:	25
Smoke Development Rating:	0
Fuel Contribution:	20

D. Airtight construction shall be provided by use of a duct sealing compound on the job site. Material and labor furnished by Contractor. Silencers shall not fail

structurally when subjected to a differential air pressure of 8" w.g. inside to outside of casing.

E. Static pressure loss of silencers shall not exceed those listed in the silencer schedule at the airflow indicated. Airflow measurements shall be made in accordance with applicable portions of ASME, AMCA and ADC airflow test codes.

2.02 TUBULAR SILENCERS

A. Tubular silencers shall be provided as indicated in schedule.

B. Construction of casing, interiors, filler material and ratings shall be similar to rectangular type, except casing shall be galvanized spiral duct.

2.03 TUBULAR PACKLESS SILENCERS

A. Provide tubular packless silencers of the models and sizes shown on plans and/or listed in schedule. Silencers shall be as manufactured by Industrial Acoustics Company, Types TXS/TSL.

B. Materials and Construction:

1. Silencers shall be constructed entirely of 316L stainless steel in accordance with ASHRAE guide recommendations for high pressure rectangular ductwork. Seams shall be lock formed.

2. No sound absorptive material of any kind is to be used in the silencers. Silencers shall attenuate air/gas transmitted noise solely by virtue of controlled impedance membranes and broadly tuned resonators.

3. Silencers subjected to corrosive environments shall be as noted on the schedule and fabricated from 316L SS for exposure to fume hood contaminant.

C. Acoustic Performance: Silencer ratings shall be determined in a duct-to-reverberant room test facility which provides for airflow in both directions through the test silencer in accordance with ASTM Specification E 477.

D. Aerodynamic Performance: Static pressure loss of silencers shall not exceed those listed in silencer schedule as the airflow indicates. Airflow measurement shall be made in accordance with ASTM, AMCA and ADC airflow test codes.

E. Certification: With submittals, the manufacturer shall supply certified test data on Dynamic Insertion Loss, Self-Noise Power Levels, and Aerodynamic Performance for Reverse and Forward Flow test conditions.

PART 3 - EXECUTION

3.01 INSTALLATION

A Install silencers in accordance with manufacturer's instructions and details indicated on the drawings.

END OF SECTION

SECTION 15932

AIR OUTLETS, INLETS, VAV TERMINALS

PART 1 - GENERAL

1.01 RELATED DOCUMENTS

A. Drawings and general provision of Contract, including General and Supplementary Conditions and Division 1 Specification sections, apply to work of this section as if repeated herein.

B. Section 15010 - Mechanical General Requirements

C. Section 15140 - Supports and Anchors

D. Section 15200 - Seismic Protection for Mechanical Systems

E. Section 15240 - Mechanical Sound and Vibration Control

E. Section 15250 - Mechanical Insulation

F. Section 15891 - Metal Ductwork

G. Section 15910 - Ductwork Accessories

G. Section 15970 - Controls

H. Section 15995 - Testing, Adjusting and Balancing

I. Division-16

1.02 DESCRIPTION

A. Provide all labor, material, tools, equipment, and services necessary to furnish and install the work specified herein and indicated on the drawings for a complete project, including but not limited to the following:

1. Single duct VAV terminal units with hot water reheat coils.

2. Air grilles, registers, and diffusers.

B. Extent of air terminals work required by this section is indicated on drawings and schedules, and by requirements of this section.

C. Air terminals are to provided and installed by the Mechanical Contractor. Electronic actuator and velocity pressure sensors shall be furnished and installed under Section 15970 - Controls.

D. All air terminals shall be supplied with averaging velocity sensor arrays, factory tested, and calibrated prior to shipment. Disassemble as required to prevent damage to components during shipment. Provide complete records of testing and calibration to the SDR prior to delivery to job site for installation.

1.03 QUALITY ASSURANCE

A. Manufacturer's Qualifications: Firms regularly engaged in manufacture of air terminals with characteristics, sizes, and capacities required, whose products have been in satisfactory use in similar service for not less than 10 years.

B. Codes and Standards:

1. ADC Compliance: Provide air terminals which have been tested and rated in accordance with ADC standards, and bear ADC Seal.

2. ARI Compliance: Provide air terminals which have been tested and rated in accordance with ARI 880 "Industry Standard for Air Terminals" and bear ARI certification seal.

3. NFPA Compliance: Construct air terminals using acoustical and thermal insulations complying with NFPA 90A "Air Conditioning and Ventilating Systems".

1.04 SUBMITTALS

A. Submit in accordance with Division 1 - Section 01300.

B. Product Data: Submit manufacturer's technical product data, including performance data for each size and type of air terminal furnished; schedule showing drawing designation, room location, number furnished, model number, size, and accessories furnished; and installation and start-up instructions.

C. Wiring Diagrams: Submit ladder-type wiring diagrams for electric power and control components, clearly indicating required field electrical connections.

D. Maintenance Data: Submit maintenance data and parts list for each type of air terminal; including "trouble-shooting" maintenance guide. Include this data, product data, shop drawings, and maintenance data in maintenance manual; in accordance with requirements of Division 1.

E. Air flow and pressure drop calibration curves as determined during factory testing, and sound rating test results.

PART 2 - PRODUCTS

2.01 ACCEPTABLE MANUFACTURERS

A. Manufacturers: Shall be Titus Model AESV-3000, Trane, Air Monitor Corporation or approved equal for air terminals. Shall be Kreuger, Titus, or approved equal for air outlets and inlets. Performance criteria based upon Titus products.

2.02 VAV AIR TERMINALS

A. Furnish and install single duct, pressure independent, variable air volume terminals of the sizes and capacities shown in the plans.

1. The terminal casing shall be 22 gauge galvanized steel, internally lined with dual density glass fiber insulation which complies with UL 181 and NFPA 90A. All exposed insulation edges shall be coated with NFPA 90A approved sealant to prevent entrainment of fibers in the air stream. The discharge connection shall be slip-and-drive construction for attachment to metal ductwork.

2. The damper shall be heavy gauge steel with shaft rotating in Delrin or bronze oil tite self-lubricating bearings. Nylon bearings are not acceptable. Shaft shall be clearly marked on the end to indicate damper position. Stickers or other removable markings are not acceptable. The damper shall incorporate a mechanical stop to prevent over stroking.

3. At an inlet velocity of 2000 fpm, the differential static pressure required to operate any terminal size shall not exceed 0.10” wg for the basic terminal or 0.25” wg for the terminal with integral attenuator.

4. Sound ratings for the terminal shall not exceed values as shown on schedule. Sound performance shall be ARI certified.

B. Hot Water Reheat Coils: Each unit shall include non-ferrous water headers using seamless copper tubing, primary copper surface, secondary aluminum plate fins surface, and galvanized steel casings. Coils shall have universal right or left-hand air flow applications, ARI certified, and with the performance as scheduled.

2.02 AIR GRILLES, REGISTERS, AND DIFFUSERS

1. Provide grilles, registers, and diffusers as scheduled of one of the above acceptable manufacturers.

PART 3 - EXECUTION

3.01 INSPECTION

A. Initial inspection of terminal units upon receipt, check the contents of cartons or the condition of palletized units. If there is any damage, file a damage claim per the instruction card in each package, and notify manufacturer immediately.

B. Examine areas and conditions under which air terminals are to be installed. Do not proceed with work until unsatisfactory conditions have been corrected in manner acceptable to Installer.

3.02 INSTALLATION OF AIR TERMINALS

A. General: Install air terminals as indicated, and in accordance with manufacturer's installation instructions.

B. Location: Install each unit level and accurately in position indicated and coordinate installation location in relation to other work. Maintain sufficient clearance for normal service and maintenance, but in no case less than that recommended by manufacturer.

C. Duct Connections: Connect ductwork to air terminals in accordance with Division-15 ductwork sections.

3.03 FIELD QUALITY CONTROL

A. Upon completion of installation and prior to initial operation, test and demonstrate that air terminals, and duct connections to air terminals, are leak-tight.

B. Repair or replace air terminals and duct connections as required to eliminate leaks, and retest to demonstrate compliance.

C. Any unit functioning with excessive noise as determined by the SDR shall be removed and replaced without additional cost to Sandia.

3.04 CLEANING

A. Clean exposed factory-finished surfaces. Repair any marred or scratched surfaces with manufacturers touch-up paint.

END OF SECTION

SECTION 15940

LABORATORY AIR CONTROL SYSTEMS

PART 1 GENERAL

1.01 RELATED DOCUMENTS

A. Drawings and general provision of Contract, including General and Supplementary Conditions and Division 1 Specification sections, apply to work of this section as if repeated herein.

B. A laboratory airflow control system shall be furnished and installed to control the airflow into and out of laboratory rooms. The laboratory control unit shall vary the amount of air into the room to maintain temperature control, minimum ventilation, airflow balance, and laboratory pressurization in relation to adjacent spaces (positive or negative). A room differential Pressure Transmitter with integral display shall monitor and display the pressure differential between the laboratory and the corridor.

1.02 DESCRIPTION

A. Extent of laboratory air control systems work, is indicated on drawings and schedules, and by requirements for this section.

B. Refer to other Division 15 sections for insulation of laboratory air control system.

C. Refer to Division 11, SECTION 11610, "FUME HOODS".

1.03 RELATED DOCUMENTS

A. Drawings and general provisions of Contract, including General and Supplementary Conditions and Division-1 Specification sections, apply to work of this section.

B. Division 15, SECTION 15050, "BASIC MECHANICAL MATERIALS AND METHODS", sections apply to work of this section.

1.04 QUALITY ASSURANCE

A. Installer Qualifications: Firm with at least 3 years of successful installation experience on projects with laboratory air control systems work similar to that required for project.

1.05 SUBMITTALS

A Product Data: Submit manufacturer's technical product data and installation instructions for laboratory air control systems materials and products.

B. Shop Drawings: Submit a layout drawing of each laboratory air control system. Submit the manufacturer's installation instructions. Submit a complete list of components by system in order to verify compliance with the specifications and drawings.

C. Record Drawings: At project closeout, submit record drawings of installed laboratory supply systems products; in accordance with requirements of Division 15, SECTION 15010, "BASIC MECHANICAL REQUIREMENTS."

D. Maintenance Data: Submit maintenance data and parts lists for laboratory air control systems materials and products. Include this data, product data, shop drawings, and record drawings, in maintenance manual; in accordance with requirements of Division 15, Section 15010 "BASIC MECHANICAL REQUIREMENTS".

E. The manufacturer shall provide a separate concordance schedule which shall include the section, paragraph, and subparagraph of these specifications and direct statement to indicate compliance or non-compliance with the requirements. For all areas of non-compliance the manufacturer shall describe what specific and alternative approach has been taken and document the impact this will have on the sizing of the air delivery systems, the required cooling and heating capacities, energy costs, and diversity of the building.

F. **The manufacturer shall furnish a letter of compliance** to the SDR, signed by a corporate officer of the firm, certifying the compliance and non-compliance items as stated above **two weeks prior to the bid**.

1.06 SYSTEM DESCRIPTION

A. A laboratory room airflow control system shall be furnished and installed to control the airflow into and out of laboratory rooms as indicated. The exhaust volume of a laboratory fume hood shall be controlled by a fume hood control system to maintain a constant average face velocity into the fume hood. A Make-up/supply air control system shall vary the volume of VAV supply and make-up

air into the room to maintain both temperature control and air flow balance. A return/relief air valve shall also be used to aid in minimum ventilation and temperature control. System response time shall not exceed 5 seconds.

B. System shall include fume hood controllers, sash position sensor, corrosion resistant exhaust valve, Make-up/Supply Air Control Panel, Make-up/Supply Air Valve, Return/Relief Air Valve and all interconnecting wiring and pneumatic tubing to result in a completely operational system, where indicated on drawings or required.

C. All control components except for pneumatic actuators and pilot positioners shall be strictly electronic in nature.

D. All laboratory airflow control system components shall be the products of a single manufacturer for single point responsibility. Said laboratory control system components shall be manufactured by Phoenix Controls Corporation of 83 Chapel Street, Newton, MA 02158, no substitutions

PART 2 MATERIALS

2.01 GENERAL

A. The laboratory airflow control system shall be fully stand-alone for each individual laboratory. The system shall not use or rely on information from controllers in other laboratory areas to control the functions within its laboratory.

B. The laboratory airflow control system shall employ individual Adaptive Face Velocity controllers that directly measure the area of the fume hood sash opening and proportionally control the hood's exhaust airflow in a variable volume mode to maintain a constant face velocity of 100 fpm over a minimum range of 20 to 100% at full sash opening. Safety and energy savings shall be insured through a corresponding minimum change in hood exhaust flow of 5 to 1. The value of the hood's face velocity shall also be automatically switched between in-use and standby levels based on operator usage of the hood. Response time shall be less than one second with no more than a 5% overshoot or undershoot. The system shall achieve 90% of its commanded volume within one second of the sash reaching 90% of its final value with a full height sash movement of one second.

C. The laboratory airflow control system shall respond and maintain specific airflow (± 5% of signal) and stability (< 5% over/undershoot) within one second of a change in duct static pressure irrespective of the magnitude of pressure and/or flow change or quantity of airflow controllers on a manifolded system.

D. The laboratory airflow control system shall also maintain intersystem stability within one second of a change in pressure and/or flow to eliminate hunting, system oscillations, and crosstalk between airflow controllers.

E. The laboratory airflow control system shall use volumetric offset control to maintain room pressurization. The system shall respond and maintain room pressurization (negative or positive) within one second of a change in room/system conditions.

F. The laboratory airflow control system shall employ highly accurate airflow controllers (± 5% of signal) with a minimum 8 to 1 turndown to insure accurate pressurization at low airflows and guarantee the maximum system diversity and energy efficiency.

G. The control system shall include an emergency exhaust capability which can override the sash sensor and command maximum exhaust air flow. The fume hood monitor shall contain a push to start, push button switch to initiate this mode.

I. Fume hood monitor shall include an energy use meter to indicate a relative measure of hood air flow, LED indication for normal operation, LED and audible indication for an unsafe flow condition, and LED and audible alarm to indicate emergency exhaust operation.

J. A low face velocity alarm circuit shall be included to electronically sense a loss of air flow via a drop in motor power or a difference between the actual and commanded motor speed. This alarm shall be communicated to the user through audible and visual means. The flow alarm condition shall also be indicated at the variable frequency drive by a visual indicator on the cover. Response time shall be two seconds or less.

K. The following building system interfaces shall be provided:

1. 4 to 20 ma current signal proportional to motor frequency.

2. Normally open relay contacts to indicate an emergency exhaust mode.

3. Normally closed relay contacts to indicate a loss of face velocity.

4. Normally open relay contacts to indicate a loss of face velocity.

5. Normally open relay contacts to indicate opening of the hood sash above a user set sash position threshold.

L. A push button switch shall be provided to mute the audible alarm. The mute mode is automatically reset when the alarm condition ceases.

M. A set of input contacts shall be provided inside the Fume Hood Monitor to remotely command the Emergency Exhaust mode from an external SPST switch, thermostat, or EMCS system.

N. Momentary or extended losses of power shall not change or affect any of the control system's setpoints, calibration settings, or emergency exhaust mode status. After power returns the system shall continue operation exactly as before without need of operator intervention. Under no circumstances shall loss of power command the exhaust system to full flow upon return of power.

O. The fume hood monitor and sash sensor shall be designed to meet the UL913, class 1, division 1, (Groups C, D and methane) standard for intrinsically safe equipment used in hazardous locations.

2.02 CLOSED LOOP, VARIABLE FREQUENCY DRIVE

A. The closed loop, variable frequency drive (PCD Series) shall be supplied to linearly control the exhaust flow out of a laboratory fume hood.

B. The closed loop drive shall measure the motor speed through information about the motor's phase currents and voltages. No tachometer, or resolvers, or optical encoders shall be employed. The measured motor speed shall be used to provide closed loop speed control of the axial blower motor for increased accuracy and immunity to power time glitches. The resulting synchronism between drive frequency and motor speed shall be maintained under all conditions.

C. The drive shall be capable of restarting a coasting motor without tripping or shutting down. The drive shall apply rated torque to accelerate the motor to the commanded speed within one half second of the reapplication of drive power or the removal of a motor fault condition.

D. The drive shall protect itself against line to line shorts and motor phase loss without shutting down or tripping off.

E. The drive shall be designed to provide rated operation with a 460 VAC input line (460VAC + or - 10%) of 47 to 62 HZ.

F. Stalled motor overload protection shall be included to reduce motor current to 75% or less of rated current after the motor has been stalled for 10 seconds.

G. The drive shall not require any user adjustments except for a horsepower selection jumper. This jumper shall adjust the drive's current rating and limit based on the motor's horsepower.

H. The drive shall accelerate the motor rapidly, limited only by the motor's rated torque and load. No user adjustable or preset acceleration ramp or timing circuits shall be employed.

I. The motor power factor shall be controlled to reduce motor losses during light loads.

J. The drive shall employ a full wave bridge rectifier and capacitor input circuit to obtain a high input power factor and to reduce high frequency noise conduction to the power line.

K. The drive shall include an isolated signal interface so that the fume hood monitor and sash sensor circuitry and signals can be referenced to earth ground.

L. A wall mounted NEMA Type 1 enclosure shall be supplied for the drive with two conduit holes provided for bottom entry.

2.03 MAKE-UP/SUPPLY AIR CONTROL PANEL

A. The Make-up/Supply Air Control Panel equal to the (MAC200) shall be supplied to control the airflow balance of each lab room or module, as indicated on electrical drawings.

B. The Control Panel shall be of electronic design with analog signal inputs and outputs. The inputs shall accept 0 to 10 volt signals proportional to fume hood exhaust, general exhaust, or return/relief air flow. The output signals will control make-up/supply and/or return/relief with 0 to 10 volt signals linearly proportional to the desired make-up/supply and general exhaust volumes.

C. Field adjustable trimpots shall be provided for all required calibration and scaling adjustments.

D. In the event of an emergency exhaust or low flow alarm conditions in one of the hoods the Control Panel shall reduce the make-up/supply air flow as if the indicated fume hood were exhausting its minimum flow.

E. The Control Panel shall maintain a constant adjustable offset between the room's total exhaust and make-up/supply volumes. This offset shall be independent of the exhaust volume magnitude.

F. The Control Panel shall generate 0-10 volt analog signals linearly proportional to the airflow of each exhaust air source as indicated by the calibrated input signals. Similar output signals shall also be provided for the supply/make-up, return/relief, and total exhaust airflow volume signals. These signals shall be provided for calibration and for remote or local monitoring of the room's airflows. In

particular, these signals shall be completely compatible and easily interfaced with The Barrington Energy Management and Control System.

G A three and half digit digital display reading out directly in CFM and a selector switch shall be provided to indicate the magnitude of the airflow signals called out in subsection F above.

2.04 AIR CONTROL VALVES

A. The airflow controller shall be of the venturi valve control type. The valve shall be manufactured and assembled in the United States, including all materials, no exceptions.

B. The valve shall be pressure independent over a 0.6" to 3.0" W.C. drop across the valve. Integral pressure independent assembly shall respond and maintain specific airflow within one second of a change in duct static pressure irrespective of the magnitude of pressure and/or flow change or quantity of airflow controllers on a manifolded system.

C. Airflow accuracy shall be ± 5% of reading (not full scale) over an airflow turndown range of no less than 8 to 1. No minimum entrance or exit duct diameters shall be required to ensure speed of response, accuracy, or pressure independence.

D. The valve shall be constructed of one of the following two types:

1. Supply and general exhaust air assembly shall be constructed of 16 gauge aluminum. All bearing surfaces shall be made of a composite teflon or teflon infused (versus coated) aluminum. The assembly's shaft, pivot arm, shaft support brackets, and internal mounting hardware shall be made of 316 series stainless steel. Lesser grade stainless steel materials are unacceptable.

2. Fume hood and canopy snorkel, exhaust assemblies shall have two baked-on coats of a corrosion resistant phenolic coating (Heresite P403 or Phenolflex 957). The assembly's shaft shall be 316L stainless steel with two additional baked-on coats of a corrosion resistant phenolic coating. The pivot arm, shaft support brackets, and internal mounting hardware shall be made of 316L stainless steel. All bearing surfaces shall be made of a composite teflon or teflon infused (versus coated) aluminum. Uncoated shafts and lesser grade stainless steel materials are unacceptable.

E. A pneumatic actuator shall be factory mounted to the valve. Loss of pneumatic supply air shall cause exhaust valves to fail open to the maximum scheduled design flow for the project, and supply valves to fail to the minimum scheduled design flow. Fail in last position electric actuators or pneumatic actuators/ controllers that

fail to uncontrolled flows are not acceptable. Constant volume valves do not require actuators.

F. Airflow controllers that use a VAV box, control damper, bladder damper, non-Phoenix venturi valve, or an airflow measuring device (e.g., pitot tube, flow cross, air bar, vortex shedder, etc.) are not acceptable.

G. Certification

1. Each airflow control valve shall be factory calibrated to the job specific airflows as detailed on the plans and specifications using NIST traceable air stations and instrumentation having a combined accuracy of at least ± 1% of signal over the entire range of measurement. Electronic valves shall be further calibrated and their accuracy verified to ± 5% of signal at eight different airflows per valve.

2. All airflow valves shall be individually marked with valve specific, factory calibration data. As a minimum, it should include: valve tag number, serial number, model number, eight point valve characterization information (electronic valves), and quality control inspection numbers. All information shall be stored on computer diskette in ASCII format for future retrieval or for hard copy printout to be included with as-built documentation.

H. The response time to vary the valve's airflow from its minimum to its maximum value or vice versa shall be no more than 1 seconds.

I. Valves shall be constructed of aluminum, galvanized steel or other suitable materials.

J. Valve shall be supplied as an assembly complete with pneumatic actuator, pilot positioner, linear compensation electronics, and E/P transducer all mounted on a common bracket.

K. Valve assembly shall have a calibrated linear command voltage to air flow volume characteristic. This shall be accomplished by electronics using no less than a five piece inverse approximation of the valve's non-linear characteristic.

2.05 FUME HOOD MONITOR

A. A fume hood monitor shall be provided to receive the sash and Zone Presence Sensor output signals and to generate an exhaust airflow control signal for the appropriate volume control device in order to provide a constant yet adaptive face velocity. Separate visual indication shall be provided at the monitor for both the in-use and standby operating modes. Audible and separate visual alarms shall be provided for both flow alarm and emergency exhaust conditions.

B. The energy waste alarm of above shall also be triggerable by the combination of a fume hood with its sash left open, and the lack of the operator in front of the hood. The alarm shall sound approximately five seconds (adjustable) after the operator leaves the area in front of the hood.

2.06 TWO POSITION EXHAUST AIRFLOW CONTROLLER

A. The valve shall maintain two fixed (maximum/minimum) factory calibrated, flow setpoints based on a switched 0 to 20 p.s.i. pneumatic signal. The valve shall generate a 0 to 10 volt feedback signal linearly proportional to its airflow for DDC monitoring or airflow tracking controls.

PART 3 EXECUTION

3.01 INSTALLATION

A. All equipment items shall be installed as recommended by the manufacturer.

B. The Contractor shall furnish the sash sensor and monitor for the fume hood manufacturer to factory install. The monitor shall be flush mounted into the fume hood casing and the sash sensors and cables shall be hidden from view.

C. Linearized air flow control valves (fume hood exhaust, make-up, supply, or general exhaust) shall be installed in ductwork by the contractor. Valves shall be mounted in orientation as scheduled and the performance shall be calibrated.

D. The Contractor shall install Make-up/Supply Control (MAC) Panel where indicated on electrical drawings, within the loft. 110VAC, single phase power shall be wired to Control Panel.

E. The Contractor shall pipe 140 kpa (20 psi) clean, pneumatic supply air from the building compressed air system, to the air flow control valves (fume hood exhaust, make-up/supply, or return/relief).

F. The Contractor shall extend eight wire plenum rated cables from the fume hood monitors to the variable frequency drive, from the fume hood monitors to the make-up/supply air control panel, and from the make-up/supply control panel to the make-up/supply air and return/relief control valves. These cables shall be supplied by the Fume Hood Controls Manufacturer and shall be furnished preterminated with modular plug style connectors. Two wire cables attached to the sash sensors shall be routed into their associated fume hood monitor. The Contractor shall, plug in or connect cables as required.

G. The Contractor shall install closed loop variable frequency drive in place of a motor starter where indicated on drawings.

END OF SECTION

SECTION 15970

CONTROLS

PART 1 GENERAL

1.01 OVERVIEW

A. The scope of work described in this section and as shown on the control drawings shall be provided and installed under this section of the specification.

B. This document contains the specification for development of the Energy Management Control System (EMCS). The EMCS system architecture utilizes intelligent distributed control modules, which communicate over a controller network. Operator Workstations are connected to the site EMCS fiber network.

1.02 RELATED DIVISIONS AND SECTIONS

A. Section 15010 - Mechanical General Requirement
B. Section 15130 - Meters and Gauge
C. Section 15855 - Air Handling Units
D. Section 15891 - Metal Ductwork
E. Section 15910 - Ductwork Accessories
F. Section 15932 - Air Outlets & Inlets
G. Section 15990 - Testing, Adjusting, and Balancing
H. Division 16 - Electrical

1.03 SCOPE

A. It is the intent of this section to provide, install, connect, program, and calibrate the EMCS as necessary to provide fully automatic control for all systems as shown in the control drawings, stated in the sequences of operation, indicated in the electrical wiring diagrams, or as otherwise required by the Contract Documents. Some equipment controls and interlocks are specified to be provided in other portions of the contract documents. As work of this section, coordinate with these other suppliers and trades to provide a completely functioning EMCS.

B. It is the responsibility of the bidder to read and conform to all sections of the specifications, review all contract drawings of all divisions, and coordinate with all equipment suppliers of material specified under other sections of the specifications.

C. The engineering, installation supervision, programming, graphic development, calibration, start up, and checkout necessary for a complete and fully operational EMCS, as specified hereafter, shall be provided under this section.

D. Provide training and instruction of the installed EMCS.

E. Provide the necessary materials and manpower to participate in the testing, adjusting, and balance as required by those sections of the specification.

F. Provide on site technical support during HVAC systems commissioning procedures.

G. Furnish, install, and connect all electrical control wiring including conduit at terminals of all variable frequency drives, control panels, sensors, transducers, microprocessors, devices, and all other terminal conditions necessary for controlling any and all equipment furnished as a part of the HVAC systems.

H. Provide fire interface wiring from the EMCS system to the Firemans Control Panel and the Fire Alarm Control Panel.

1.04 SUBSTITUTIONS

A. The control system and all control components shall be furnished and installed by Barrington Systems or their subcontractors. No substitutions.

1.05 SUBMITTALS

A. Submit six (6) sets of shop drawings and submittal data in accordance with the General Contract Requirements and submittal requirements of this section.

B. Submittals shall consist of shop drawings, catalogue data sheets, graphic displays, and software development parameters as defined in the following paragraphs. No materials shall be purchased and no work shall be conducted at the job site until submittals have been reviewed and approved.

1. Shop drawings shall be provided which show detailed communications architectures, control devices, electrical wiring diagrams, control system schematics, temperature control panels (TCP) layouts, sequences of operation, and a material list. All systems and the associated control components as well as all connections between components shall be clearly indicated. The submittal shall indicate the required coordination with equipment supplied by sources other than this section. The intention is for the shop drawings to be comprehensive enough for the installation crew to complete all aspects of the installation without the need for supporting documentation, except third party equipment installation manuals. All wiring shown on the drawings shall be labeled on both ends and these labels shall be used in the installation process for ease of comparing the shop drawings to the actual field installation. Each control component shall be given a unique identifier. This identifier shall be used in creating equipment field device labels and in the sequence of operation so that reference to the drawings can be easily referenced.

a. Electrical Wiring Diagrams shall be shown on the shop drawings. Electrical wiring diagrams shall show the specific details of all switches, relays, motor starters, etc. The electrical wiring diagrams shall show the correct control wiring and interlock wiring of all equipment provided under the Contract. Each TCP shall reference the correct power source by breaker panel and circuit number.

b. The sequence of operation for each controlled system shall be provided with reference to the control device identifier. The sequence of operation shall break down the control operation by major function (i.e., mixed air control, occupied-unoccupied, smoke purge, etc.) and describe in detail the correct operation and interaction with other system functions. Use of the sequences of operation stated on the contract control drawings is

acceptable.

c. A complete material listing shall be included on the shop drawings which shows the device model numbers, control device identifiers, quantities, manufacturers, etc., of all equipment provided under this section. The material list shall be organized in alphabetical order so that it can be easily compared to the associated catalogue data sheets.

2. Catalogue data sheets will be provided for each different piece of equipment provided under this section. At a minimum the data sheet shall contain sufficient information so that compliance with the specification can be verified. Where multiple models or options are indicated on the same catalogue data sheet, the equipment proposed shall be highlighted or otherwise indicated. The catalogue data sheets shall be organized in alphabetical order to match the material listing on the shop drawings.

3. The names, phone numbers, e-mail addresses, job descriptions, pager numbers, mobile phone numbers, etc. shall be provided for the project manager, project engineer, project programmer(s), installation foreman, and any other individuals key to the completion of this project. If at any time during the project the assignment of personnel changes, the Owner and the Engineer shall be notified and the previously listed information shall be furnished for the newly assigned individuals.

1.06 RECORD DRAWINGS

A. Record drawings shall be provided as required the general contract requirements. Record drawings shall not be completed until after installation is complete. Any changes made during installation shall be recorded on the approved coordinated EMCS shop drawings as they are made so that a current record drawing is constantly being updated. These as-built drawings shall be available at all times for inspection by the Owner, Engineer, or Owner's Representative. At completion of the project, all hand drawn field changes shall be incorporated into a clean reproducible set of as-built drawings. These as-built drawings shall be used during the training sessions.

B. The Contractor shall furnish complete spare parts lists, operating instructions, maintenance literature, and completed point verification forms.

C. Record drawing shall all be provided on magnetic media directly compatible with Autodesk AutoCad® Revision 2002.

D. Two (2) sets of the following documents shall be delivered to the Owner prior to the beginning of training:

1. One operating manual for each component purchase through a third party vendor including equipment such as computers, printers, video monitors, interface cards, modems, etc.

2. All manuals relating to operating system software. This requirement includes not only the EMCS operating software but also Windows 2000®, etc.

3. A systems programmer's manual that will include all information necessary to

perform EMCS programming and produce system graphics.

E. After final occupancy and all debugging has occurred, the Contractor shall prepare two copies of all project specific control software on non-volatile CD ROM and deliver them to the Owner.

1.07 SYSTEM START-UP AND TESTING

A. At the termination of the point verification process, the contractor shall submit completed and approved point verification forms for each point in the system.

B. Upon successful completion of all point verification testing, the Contractor shall submit hard copies of all trend logs as specified in Part 3 of this section. The trend logs shall trend at least 48 hours of normal uninterrupted operation (non-weekend or holiday) for the purpose of documenting proper implementation of the control sequences of operation.

C. The Owner reserves the right to participate in or assign a representative to participate in the startup, testing, programming, or any other aspect of the construction of this project at no additional cost to the Owner.

D. Before permitting operation of any equipment which is provided under this Contract, review all wiring connections which have an influence on this equipment or work and verify that these connections are correct, and that the overload protection devices installed are of the correct type, rating, and setting to properly protect this equipment.

E. After testing and verification, demonstrate to the SDR each and every sequence of operation. Prepare a logbook containing the written sequence of operation of each system and/or piece of equipment along with a space for the SDR and Controls Manufacturer to sign off upon approval of the demonstration.

1.08 TRAINING

A. The Contractor shall provide a total of forty (40) hours of training time broken down as follows in this section.

B. During the initial startup phase of the project, the EMCS supplier shall permit the Owners operating personnel to be involved with the troubleshooting, initial startup, point verification testing, and performance trending.

C. Prior to the final system trending, the Contractor shall provide one day (8 hours) of training for up to six (6) Owner designated operating personnel. The training shall cover all general aspects of the EMCS system installation, wiring, calibration techniques, programming, troubleshooting, etc. The training shall not cover the details of this specific project. The training shall provide the same structure and depth as that provided to factory-authorized representative's installation and programming personnel.

D. Upon completion and acceptance of the work, provide three days (20 hours) of training for up to six (6) Owner designated operating personnel who have responsibility for the mechanical/control system. This training shall be conducted on site and shall focus on the specifics of this project. A complete training booklet shall be provided and used during the training period. The booklet shall include the as-built drawings.

E. The EMCS supplier shall provide twelve (12) additional hours of onsite training during the warranty period. The Contractor shall provide this training at the request of the Owner. The Owner will give at least one-week notice of the need for additional training. Warranty and service time shall not constitute training hours.

1.09 SERVICE AND WARRANTY

A. The system supplier shall maintain a maintenance support facility complete with system technicians, diagnostic and test equipment, and new spare components. The service agent shall provide a continuously monitored local service telephone number for emergency service.

B. Service and maintenance must be provided for one (1) year from time of Owner acceptance of the control system. If the manufacture has a standard warranty that exceeds the specified requirement then the longer manufacturers warranty shall be provided to the Owner. Service during this period shall be available within 12-hours from the time the trouble call is placed. Warranty shall be for all materials and labor provided as the scope of work of this Section.

PART 2 PRODUCTS

2.01 GENERAL

A. All products shall be selected in accordance with Part 2 of this section. Installation of the components shall be in accordance with Part 3 of this Section.

2.02 COMMUNICATION NETWORK

A. Inter-Building Local Area Network (LAN)

1. A complete ETHERNET® communication network shall be provided by other sections to connect the new scada node to the existing EMCS systems on the SNL network.

B. Controller Local Area Network (LAN)

1. LanStar Controllers shall reside on the second tier LAN referred to as the LanStar Network. The LanSTAR shall begin at the Operators Workstation or scada node and connect all of the LanSTAR Controllers throughout the building. The LanSTAR LAN shall be an ethernet network.

2. Development of the Controller LAN is work provided entirely under this section of the specification.

C. Micro-STAR Local Area Network

1. Micro-STAR Controllers shall be installed on a Sub-Controller LAN referred to as the Mico-STAR LAN. These LAN's shall operate off the associated LanSTAR Controllers. Each Lan-STAR controller shall support two (2) Micro-STAR channels with each channel supporting sixteen (16) Micro-STAR

controllers.

2. The Sub-Controller LAN shall operate RS-485. Development of the Sub-Controller LAN's is work provided entirely under this section of the specification.

2.03 OPERATOR WORKSTATIONS

A. Provide new Operator Workstations (OWS) as indicated on the drawings, including all necessary hardware and software requirements described herein and as indicated on the Contract Drawings and as required for a fully functional system.

B. Hardware Requirements

1. Minimum computer hardware requirements based on Dell OptiPlex GX50 Tech Specs are as follows:

a. 100W Small form factor chassis power supply;
b. 100 MHz front side bus with 128KB L2 internal cache;
c. Intel Celeron 900 MHZ processor with Intel 810 chipset;
d. Two gold plated DIMM slots support 64-512MB Non-ECC PC100 SDRAM;
e. EIDE CD-ROM drive
f. I/O Ports: VGA DB15, 4USB ports-2 front & 2 back, 2 serial ports, 1 parallel port, RJ-45 network port, 2 PS/2 ports (keyboard and mouse), microphone, stereo in, stereo outback, stereo out front;
g. EIDE Ultra ATA/66 10GB@7200rpm Hard Drive;
h. 1.44 MB Floppy Drive;
i. Integrated Analog Devices ADI1885 AC "97 Audio with Yamaha SoftSynthesizer Wavetable
j. Embedded Intel 8MB4 Direct AGP DVMT 2D/3D Graphics
k. Dell 17 inch color monitor
l. Small form factor chassis with internal 1" hard drive, external 3.5" slimline, external 5.25" slimline, one low-profile PCI (2.5"x6.6")
m. Integrated 3Com Etherlink 10/100 PCI LAN controller with ACPI and Remote Wake-up network interface;
n. Enhanced QuietKey (Spacesaver) keyboard with 3 programmable hotkeys;
o. Dell 2 button PS/2 mouse
p. Factory installed Microsoft Windows 2000 Workstation Operating system

2. Provide an alarm and color report printer as a part of each operator workstation.

3. Each operator's workstation shall have a modem with EIA-232C connection and automatic answer/originate capability. Minimum speed shall be 56 Kbps.

C. Operating Workstation Software

1. OWS software, StarView WebAccess, shall be web-based HMI and scada node software, and shall consist of a set of interactive software sub-systems designed support all User Interface functions, scan all connected LanSTARs, record and manage historical data, process on-board control algorithms, and support

standard network communications drivers in support of inter-PC communications via commercially available software such as Ethernet, TCP/IP or equivalent. Each of these tasks shall be processed in a full multi-tasking fashion without any task interrupting or suspending the processing of another.

D. Graphical User Interface (GUI)

1. The man-machine interface shall use a state-of-the-art Graphical User Interface (GUI). From this interface, the User shall be able to obtain real-time data for single or groups of points, dynamically display entire systems in graphic form, view historical and trend data and receive alarm or significant event notification.

E. AUTOCAD COMPATIBILITY

1. The system shall be directly compatible with AutoCad allowing the importing of AutoCad drawings to be used as “backdrops” for the GUI.

F. REPORTS, TRENDS AND GRAPHICAL PLOTS

1. The OWS shall have software which shall allow the User to involve any historical data in spreadsheets or custom formatted reports. In addition, the OWS software shall display User selected historical data in chart or curve form.

G. REMOTE LanSTAR PROGRAMMING FACILITY

1. The OWS shall employ a series of programs which shall support the User interaction with all LanSTARs. These programming tools shall allow the User to view and edit each LanSTAR’s on-board DDC programs. The DDC programs and the User’s editor shall support all the functions as necessary to perform the sequences of operation as specified.

H. LanSTAR SOFTWARE

1. DDC BLOCKS

a. The LanSTARs shall be programmed with software to fully support the receipt of DDC Blocks or programs downloaded from the OWS as specified herein before. The LanSTARs shall be capable of processing all DDC Blocks no less frequently once per second. This reclock time shall be User selectable on a per DDC Block basis.

I. SCADA ALARM NOTIFICATION

The OWS shall perform alarm notification via pagers, cell phones, or email as desired.

2.04 LanSTAR DISTRIBUTED DIRECT DIGITAL CONTROLLERS

A. All new DDC system controllers shall be compatible with existing Barrington systems currently in use at the Sandia Livermore Building site.

B. Provide all LanSTAR and OCS software for a complete and operable system. This shall include the data base, DDC control blocks, and applicable graphics. LanSTAR software shall be downloaded and tested to assure compliance with the specifications and sequence of operations.

C. LanSTARs shall be microprocessor based and contain sufficient nonvolatile memory to perform all specified functions with a spare capacity of at least 15 DDC blocks. The LanSTARs shall be capable of storing sufficient DDC Blocks to perform all specified control of the connected I/O points. Each LanSTAR shall have a real-time clock and calendar. Both the clock and all memory shall be battery backed and capable of maintaining all programming, date and time for power outages of up to 90 days.

D. LanSTAR LOCAL CONSOLE - Each LanSTAR shall have an on-board multi-function keypad and a 2-line by 16-character LCD display. The display shall be back-lighted enabling clear viewing independent of the surrounding ambient light levels. Through fully prompted, single keystroke commands, the LanSTAR's local console shall support a minimum of the following functions:

1. Initial setup and addressing;
2. Setup of all communications ports;
3. Display all point values;
4. Perform LanSTAR & MicroSTAR operational diagnostics;

2.05 MicroSTAR DISTRIBUTED MODULES

A. MicroSTAR units shall be provided to perform the physical interface with the monitored / controlled equipment. The MicroSTAR's I/O points shall include AI, AO, DI & DO which shall meet the following specifications:

1. ANALOG INPUTS (AI):
   a. 12 Bit Resolution
   b. Input Range: 0-5VDC, 0-10VDC, 4-20mA
   c. Accuracy: 1mV error (24°C) and 2mV error (0 to 70°C)

2. ANALOG OUTPUTS (AO):
   a. 8 Bit Resolution
   b. Output Range: 0-20mA, 0-10VDC
   c. Max short circuit current to ground at 10VDC - 20mA

3. DIGITAL INPUTS (DI):
   a. Dry contact switch closure (+/- 100mV)
   b. Switched current: 0.5mA at 5VDC

4. DIGITAL OUTPUTS (DO):
   a. Relay Isolated
   b. Contract Ratings (Resistive Load)
   c. Max switched power: 30W or 60VA
   d. Max switched current: 1 Amp
   e. Max switched voltage: 60 VDC/125VAC
   f. UL Rating: 1.0 Amp at 28VDC and 0.5 Amp at 120VAC
   g. Life Expectancy: 500,000 operations - 1.0 Amp at 28VDC
      500,000 operations - 0.5 Amp at 125VAC

2.06 TEMPERATURE ELEMENT AND TRANSMITTER

A. Temperature Sensors

1. Each single zone application shall be provided with one or more space temperature sensors as indicated on the drawings.

2. All Temperature sensors shall have a range of 0°F - 230°F, an accuracy of +/- 0.4^{o}F, and a linear output signal of 0.0 to 4.0 VDC.

3. Specification for space sensor based on Barrington TE-RTS-3.

4. Sensors used for mixed air application or where indicated on the drawings to be of the averaging style shall be of a sufficient length to form a "W" over the entire plane of airflow being measured. Specification based on Barrington TE-DAS-24.

5. Sensors for non-averaging air temperature measurement shall be based on Barrington TE-DTS-3.

6. Sensors for liquid temperature measurement shall be provided with a stainless steel thermowell. Specification based on Barrington TE-WTS-3

2.07 HUMIDITY ELEMENT AND TRANSMITTER

A. The sensors shall have an accuracy of ± 2.0% R.H. over the range of 10 to 100% R.H. with an operating temperature range of at least -20 to 60 degrees Celsius. The transmitter shall output a 4-20 mADC loop powered signal over the full range of the transmitter and the input impedance shall not exceed 500 ohms at 20 VDC. The transmitter shall be specifically designed for use in measuring outdoor or duct humidity or indoor space applications as indicated.

1. Outdoor or duct mounted units shall be enclosed in a NEMA 4 enclosure. Rotronic F65 Series Model F2C-D65.

2.08 CURRENT TRANSDUCERS

A. Current sensing transducers shall measure AC current of loads and shall output a 4-20 mADC signal over the measured range of 0 to 60 amps AC. Sensor shall have a minimum of 2.0% of full scale accuracy. Unit shall be split core design. Veris Industries Model H-921 or equivalent.

2.09 CURRENT SENSING SWITCH

A. Current sensing relays shall indicate the status of AC current of motor loads. The transistor switches shall be rated for switching controller DC current up to 0.1 amp continuously at 30 VDC. The setpoint of the contact operation shall be field adjustable from 1 to 135 amps AC. The switch shall be self powered with a switched load LED for local indication. Veris Industries Model H908 or equivalent.

2.10 CONTROL RELAYS

A. Controls relays shall be provided where indicated on the control drawings and wherever

pilot duty action for circuit interface is required. Control relay contacts shall be rated for 150% of the loading application, with self-wiping, snap-acting silver cadmium Form C contacts, enclosed in dust proof enclosure. Relays shall be equipped with the necessary mounting base, DIN rail, labels, termination clips, etc. and a coil transient suppression devices. All relays for control by the EMCS shall have 24 VAC coils compatible with the rating of the EMCS digital output. All other required relays shall have coil voltages appropriate for the installation. IDEC RH Series or equivalent.

2.11 CONTROL TRANSFORMERS

A. Control transformers required for all other control purposes including control of pilot duty relays, power supplies, damper and valve actuators, etc. shall be provided. Control transformers shall be externally fused. In no case shall a transformer have a capacity less than 125% of the attached load.

2.12 AUTOMATIC DAMPERS

A. All automatic dampers shall be as part of the mechanical equipment.

2.13 DAMPER ACTUATORS

A. Modulating and Two-Position Damper Actuators

1. The actuator shall be of the direct-coupled design. The fastening clamp assembly shall be of a “V” bolt design with associated “V” shaped toothed cradle attaching to the shaft for maximum strength and eliminating slippage. Spring return actuators shall have a “V” clamp assembly of sufficient size to be directly mounted to an integral jack shaft of up to 1.05 inches when the damper is constructed in this manner. Actuators shall be designed for a minimum of 60,000 full stroke cycles at the actuator’s rated torque and shall have a two (2) year manufacturer’s warranty, starting from the date of installation.

2. The actuator shall have electronic overload or digital rotation sensing circuitry to prevent damage to the actuator throughout the entire rotation of the actuator. Mechanical end switches or magnetic clutch to deactivate the actuator at the end of rotation are not acceptable. For power-failure/safety applications, an internal mechanical spring return mechanism shall be built into the actuator housing. Non-mechanical forms of fail-safe operation are not acceptable.

3. Spring return actuators shall be provided for all outside and exhaust/relief air dampers in addition to all locations indicated on the drawings. Spring return actuators shall be capable of both clockwise or counterclockwise spring return operation by simply changing the mounting orientation

4. Proportional actuators shall accept Pulse Width Modulation (PWM) control signaling and power from a 24 VAC source, 4-20 mA, or Tri-State control. Two position actuators shall be 24 VAC with spring return.

5. All actuators shall not require more than 10 VA regardless of the operating voltage.

6. Actuators shall be provided with a conduit fitting and a minimum three-foot

electrical cable and shall be pre-wired to eliminate the necessity of opening the actuator housing to make electrical connections.

7. Coordinate with AHU manufacturer, see Section 15855, for damper actuator requirements, torque ratings, and recommendations. Dampers shall be normally open or normally closed as indicated on the drawings.

8. Specification based on BELIMO SM-24-SR and GM-24-SR actuators.

B. VAV CONTROLLER/ACTUATOR

1. Each VAV terminal unit shall be equipped with a combination actuator/controller. The controller shall permit the field connection of tubing from the averaging velocity pressure sensor (provided as part of the VAV terminal unit. The unit shall generate a 0-10 VDC linear velocity signal for input to the EMCS. The controller shall also accept a linear 0-10 VDC linear reset signal from the EMCS. Belimo NMV-D2.

2. The actuator shall be of the direct-coupled design. The fastening clamp assembly shall be of a "V" bolt design with associated "V" shaped toothed cradle attaching to the shaft for maximum strength and eliminating slippage.

3. The actuator/controller shall meet the following specifications:

a. 24 VAC with power consumption of 3.0 watts;
b. 95° angular rotation;
c. V_p measurement of 0.02 – 0.56 " w.g. (100 to 3000 FPM);
d. Velocity measurement accuracy of 3% of velocity;
e. Min. torque of 53 in-lb and Maximum of 64 in-lb at rated voltage;
f. 110 to 150 second running time over torque range;
g. Maximum of 35 dB noise level;
h. 36", 18 gauge CL2P cable;

2.14 CONTROL VALVES

A. Ball Control Valves

1. Valves to be two-way industrial quality with bronze bodies and female NPT threads. Valve bodies may also be stainless steel, titanium or nickel with operating pressure up to 2000 PSI.

2. All valves shall have blowout proof stem design, glass-reinforced Teflon thrust seal washer and stuffing box ring with minimum 600 PSI rating. Stem packing gland screw shall be adjustable for wear.

3. Standard stainless steel ball and stem, shall be rated at a minimum of 600 PSI WOG (water-oil-gas), cold, non-shock, and 150 PSI for saturated steam service. All valves shall be provided with Reinforced Teflon seats.

4. Valve actuators shall be factory mounted and provided as described in "Valve Actuators".

5. Specification based on Belimo Control Valves.

2.15 CONTROL VALVE ACTUATORS

A. Electronic Valve Actuators

1. All ball and globe valves actuator shall be fully modulating using a 2-10 VDC input signal. There shall be a visual valve position indicator. Control power shall be 24 VAC and shall not exceed 8 watts at 24 VAC. The actuator shall provide minimum torque required for proper valve close-off, with an approximate running time of 2 minutes for full rotation. The actuator shall be designed with current limiting motor protection. (End of travel switches and magnetic clutches are not acceptable.) A release button on the actuator shall be provided to allow for manual override, except when utilizing spring return actuators.

2. The actuators and valves shall be factory mounted and tested and supplied. Specification based on Belimo valve actuators.

2.16 INPUT/OUTPUT AND INTERLOCK WIRING

A. Class I circuits

1. All materials required for installation of Class I circuits or circuits operating at greater than 48 VAC or VDC shall meet the requirements stated in Division 16, National Electric Code, and all applicable building codes as they apply to Class I circuits.

B. Class II circuits

1. All materials required for installation of Class I shall meet all requirements of the National Electric Code and all applicable building codes as they apply to Class II circuits.

2. Cable run exposed in plenums where permitted shall contain twisted conductors or pairs of twisted conductors no smaller than 18 gauge for sensors or communications trunks and 16 gauge for power trunks. The number of conductors shall be as required by the application and an overall foil shield with stranded drain wire shall be provided in all cases. The cable shall be factory stamped with a clear indication of the cable classification. The cable jacket shall be Teflon or other approved materials that comply with the smoke generation limitations outlined in Article 725 of the NEC, UL, and all requirements of the NFPA.

C. Cable run in a metallic raceway shall contain twisted conductors or pairs of twisted conductors no smaller than 18 gauge. The number of conductors shall be as required by the application. The cable shall be factory stamped with a clear indication of the cable classification. The cable jacket shall be PVC. Metallic raceway shall be as specified in Division 16.

2.17 EQUIPMENT CONNECTIONS

A. Specific mechanical and electrical equipment shall interface directly to the EMCS to provide an integrated EMCS. This equipment includes Variable Frequency Drives

(VFDs), Boilers, Air Handling Units, Fire Alarm System, etc. Refer to the related specification sections or drawings to determine the I/O required.

B. Any transducer, relay, etc. necessary to interface the EMCS to the equipment supplied I/O shall be the responsibility of this section. As work of this section, careful coordination with the equipment suppliers shall be accomplished.

2.18 DUCT STATIC PRESSURE STATION

A. Provide at each duct static pressure measuring location a traverse probe capable of continuous monitoring of static pressure. The probe shall contain multiple static pressure pick-up points along the exterior surface of the cylindrical probe, internally connected to their respective averaging manifold. Each probe shall be extruded aluminum construction with threaded end support rod and nut, and mounting plate with gasket. Each probe shall be sized to span the entire duct and not extend past either side. The probe shall not produce a measurable pressure drop and shall produce a non-pulsating signal with an accuracy of 0.5 percent of total span. Air Monitor Model Veltron DPT 2500 Plus with display readout connected to a STAT-Probe/1, no substitutions.

2.19 OUTSIDE AIR STATIC PRESSURE PROBE

A. Outside air static pressure probe shall be constructed of 10 ga.-anodized aluminum with a 2" diameter FPT connection. The probe shall be capable of sensing the outside atmospheric air pressure to within 2% of the actual value when subject to radial wind velocities up to 80 miles per hour with approach angles up to 30 degrees to the horizontal. Air Monitor, S.O.A.P., no substitutions.

2.20 DIFFERENTIAL PRESSURE TRANSMITTER (GASES)

A. Building and Duct Static Pressure Transmitters

1. Transmitters shall be individually housed in a NEMA 1 enclosure, with a single separate circuit card for each transmitter for ease of troubleshooting, repair, or range change. All transmitters will be equipped with AUTO-zeroing to eliminate the effects of transmitter zero drift. The transmitter rack shall provide the means to individually field configure each transmitter with a square rooted output, select AUTO-zero cycle frequency, and perform pushbutton calibration of each transmitter's zero and span. The transmitter shall be provided with an integral LCD display indicating the differential pressure in inches of water column as well as three other available values. The transmitter shall have an accuracy of +/- 0.25% of full scale, including non-linearity, hysteresis, deadband, and non-repeatability. The transmitter shall have a 4-20 mA equaling zero to calibrated span for static pressure, velocity pressure, or flow. Air Monitor Veltron DPT 2500 Plus with display readout, no substitutions.

B. Filter Pressure Transmitter

1. Electronic differential pressure transmitter shall be designed to measure the differential air pressure as indicated on the drawings or as required. Pneumatic connections shall be 1/4" barbed and the enclosure shall be provided with holes for panel or field mounting. The output shall be a two wire 4-20 mA loop powered device with an input range as indicated in the drawings but not more than twice the actual measure variable. The accuracy including linearity,

hysteresis and repeatability shall be less than ±2%. Modus series T30 or equivalent.

2.21 AIR FLOW ELEMENT AND TRANSMITTER

A. Fan inlet airflow probes and linear air flow transmitter shall be provided and installed by this section. Coordinate with the air handling manufacturer for fan size, make, and model number (Refer to section 15855). Furnish Air Monitor Volu-probe/FI with Veltron DPT 2500 Plus with display readout Pressure and Flow Transmitters, no substitutions. Mount the Veltron DPT 2500 Plus with display readout flow transmitters inside the return air section of the AHU next to the VFDs.

2.22 SMOKE AND FIRE DETECTORS

A. Smoke detectors shall be supplied, powered, installed, and interlocked in accordance with section 16710. Provide materials and installation in accordance with this section.

2.23 DIFFERENTIAL PRESSURE TRANSMITTER (LIQUID)

A. Electronic differential pressure transmitter shall be designed to measure the differential liquid pressure as indicated on the drawings or as required. Sensor shall have 3-valve manifold. The output shall be a two wire 4-20 mA loop powered device with an input range has indicated in the drawings but not more than twice the actual measure variable. The accuracy including linearity, hysteresis and repeatability shall be less than or equal to ±0.25% of full scale. The range shall be 0-750 in. wg differential pressure with a maximum pressure of 2000 psig. Rosemont Model No. 1151 DP5S52B1DF, no substitutions.

2.24 TEMPERATURE CONTROL PANELS

A. Totally enclosed, locking and hinged, code steel temperature control panels (TCP's) shall be provided and installed. All functional hardware needed for operation of the TCP, contained within the TCP, shall be provided and installed by the temperature control contractor. Panels shall contain all relays, controllers, gauges, and switches, etc. Suitable nameplates shall be provided for each panel, each device, and each system upon or inside the panels. Nameplates shall be engraved plastic and fastened with two (2) screws. Install panels where shown on the drawings.

B. Enclosure for Temperature Control Panels and Power Panels shall be NEMA 12, single door. Enclosure shall be provided with an interior panel, a single point, L-29 non-locking flush mount T-handle on door and body clamps, and gasket. Finish to be ANSI 61 gray polyester, minimum 16 gauge. Manufacturer: Hoffman enclosure or equal.

2.25 INDOOR STATIC AIR PROBE

A. Indoor static air probes shall be provided for each indoor building pressure measurement location. They shall be flush mounted with a concealed connection. They shall be constructed of 10 gauge aluminum with an 1/8" coupling for output signal connection. Air Monitor S.A.P./3.

B. Computer Room under floor static pressure probes shall be surface mounted with exposed connection. They shall be constructed of 10 gauge aluminum with an 1/8"

coupling for output signal connection. Air Monitor S.A.P./1.

2.26 AIR PIPING

A. Hard tubing shall be Copper Type L connected with sweat fittings and valves.

B. Plastic tubing shall be specifically designed for use with control systems. The tubing shall be resistant to ultraviolet breakdown, stress cracking and shall meet all requirements for fire retardant smoke propagation as required by applicable codes and regulations.

C. Solder shall be 95% tin and 5% antimony solder.

2.27 CONTROL CIRCUIT BREAKERS

A. Circuit breakers shall be single pole with self-lifting box lug clamping of #16-6 AWG wire. The unit shall be DIN rail mounted and capable of ratings to 480 VAC. Circuit breakers shall be sized as indicated on the drawings. Allen-Bradley Model 1492-CB1G.

2.28 VENTURI FLOW METER

A. A differential producing primary flow element shall be installed as shown on the plans and specifications and in accordance with the manufacturer's recommendations. The flow element shall be of the concentric type, short form, and low head loss venturi.

B. The venturi shall be constructed of the material specified in the schedule with groove end flanges. It shall have an accuracy of +/- 1%.

C. The flow meter shall be furnished complete with the flow tube and differential pressure transmitter shall be designed to measure the differential liquid pressure as indicated on the drawings or as required. Sensor shall have a 3-valve manifold with Pete's Plug pressure taps teed at the point of connection on the venturi meter. The output shall be a two wire 4-20 mA loop powered device with an input range has indicated in the drawings but not more than twice the actual measure variable. The accuracy including linearity, hysteresis and repeatability shall be less than or equal to ±0.25% of full scale. The range shall be 0-150 in. w.g. differential pressure with a maximum pressure of 2000 psig. Rosemont Model No. 1151 DP4S22B1DF, no substitutions.

D. Venturi meter shall be manufactured by Gerand, no substitutions.

PART 3 EXECUTION

3.01 GENERAL

A. All field hardware, control devices, conduit, wiring, etc. shall be provided as specified in Part 2.

1. The installation all aspects of the system shall comply with all applicable codes, regulations, and all related Contract Documents.
2. The installation of all materials shall be in accordance with the published manufacturer recommendations without exception. If for some reason a

particular component cannot be installed in compliance with these recommendations, the Contractor shall advise the SDR.

3. Where miscellaneous materials are required to complete an installation, i.e. isolation valves for pressure switches, wall switches for an exhaust fan control circuit, etc., the materials shall be supplied as defined in the relevant section of these specifications and installed under this section of the specification, unless otherwise noted.

4. Coordinate with other trades where installation of a particular component requires other trades to be involved. Installation coordination includes location the correct placement of thermowells, flow switches, dampers, control valves, control power circuits, etc. Care must be exercised to identify locations that meet the requirements of the manufacture including upstream and downstream distances, pressures, temperatures, etc.

5. All signal wiring requiring shielding shall have the shield terminated at the controller end only.

6. Label all wiring with permanent labels indicating the point device identifier. Install a phenolic label mounted at the device indicating the device type and point identifier name.

7. All field devices shall be labeled with 1" x 3" phenolic labels. Labels shall include the point name and device name. Labels for EMCS controllers shall indicate the breaker and panel number of the power source. Labels shall be glued, attached with screws, or copper wire in the case of valves and actuators.

B. All software development shall be completed by EMCS programmers that have been factory trained in programming and graphic development techniques of the EMCS. This includes development of the existing campus EMCS operator's software, if it differs from the manufacturer of EMCS equipment supplied on this project.

3.02 NETWORKING/COMMUNICATION

A. General

1. All LAN’s shall be installed in a manner recommended by the manufacturer, campus communications personnel, based on the environment, communications speed requirements, and distance. All LAN media shall be installed in a manner that provides protection from physical damage and interference from RF or other electrical sources.

B. Dial-up communications

1. The Contractor shall notify the Owner two-week before they are ready for a telephone line connection. The Owner shall be responsible to extend the telephone line for connection of the network modem

C. Inter-Building Local Area Network (LAN)

1. The Primary LAN is existing in other buildings; however, all media required to connect new operator workstations to the existing LAN shall be installed with

materials and procedures that comply with the requirements of the facility communications personnel and the FMS equipment manufacturer.

D. LanSTAR Local Area Network (LAN)

1. The LanSTAR LAN shall be installed with materials and procedures that comply with the requirements of the FMS equipment manufacturer.

E. MicroSTAR Local Area Network (LAN)

1. The MicroSTAR LAN shall be installed with materials and procedures that comply with the requirements of the FMS equipment manufacturer. In general, the conductors are to be a 22 gauge, low capacitance, twisted pair.

3.03 OPERATORS STATIONS

A. New Operators Workstation(s) and printer shall be located in the Energy Management Room. EMCS operating software and all support software shall be installed and configured on all workstations. All of the software development specified in this paragraph shall be implemented all new workstations.

B. User Access

1. Complete installation of Owner supplied operator names derived from the approved submittal request form. During the training session, complete the input of login and passwords associated with those personnel.

C. Reports

1. All associated I/O data as well as computational data shall be linked to the appropriate formatted report for automatic printing. At the time reports are automatically printed, the report shall be saved to the hard disk for archiving. Automatic printout of reports shall be directed to any user selected workstation or printer.

2. The following reports shall be developed for printing by the operators:

Monthly Single Zone AHU Report (Typical of all units)	
Parameter	**Element**
Runtime (in hours)	Total, Total Occupied, Total Zone Override, Total Unoccupied Temperature Override
Occupied Mixed Air Temp.	Set point, Minimum & time/date, Maximum & time/date, Average
Occupied Return Air Temp.	Set point, Minimum & time/date; Maximum & time/date, Average
Occupied Supply Air Temp.	Set point; Minimum & time/date, Maximum & time/date, Average

D. Dynamic Color Graphic Displays

1. The slides shall include a color graphic representation of the geographic area or system being observed, all realtime point value data, user interactive setpoints, schedules, etc., and realtime alarm information. Graphics shall provide flexible "pick" options to easily move across the system without the need to go back to

the trees start. The focus on the graphic generation shall be ease of understanding and user interaction for all day to day functions. At a minimum, the following graphic slides shall be developed

2. A exterior view graphic shall be provided. This graphic shall display the basic architectural features of the building (for ease in recognition by the operators) or this graphic can be a scanned photograph. This graphic shall be accessed from the central base site graphic. Each graphic shall indicated the current occupied/ unoccupied status of the “building group” schedule, the minimum and maximum zone temperature in the building, the run status of all air handling equipment in the building, all un-acknowledged alarms, etc. There shall be "picks" to move back to the campus map or to each floor or zone in the respective building.

3. A graphic shall provide for each floor and/or quadrant (depending on the size of the building) of each building. All major walls, temperature zones and actual space numbering shall be indicated. These drawings may be scanned from building floor plans or imported from ACAD drawing files and modified as necessary. All zone temperature shall either be displayed within the appropriate zone in text format or the area of each zone shall be color coded to represent the relationship to set point. Each graphic shall indicate the current occupied/unoccupied status of the “building” floor or quadrant group” or “floor sub-group” schedules, the minimum and maximum zone temperature on the floor, the run status of all air handling equipment serving the floor, all un-acknowledged alarms, etc. "Pick" windows shall be provided on these graphics to permit the operator to view a specific building air handling unit graphic or a graphic of the fan coil unit or outside air handling unit supplying a particular area. “Picks” shall be provided to move back to the building or the campus.

4. A graphic shall be provided for each temperature zone of each floor. This graphic shall be a graphic representation of the mechanical equipment serving the zone. All real time system information relative to any particular temperature zone and all color coding of the temperature zone shall be the same as was provided for the floor plan graphics. This graphic shall indicate the current occupancy status. "Pick" windows shall be provide on these graphics to permit the operator to view the specific supporting mechanical system relative to the respective floor plan or to move back to the building floor plan.

5. Separate graphics shall be provided for all mechanical equipment serving the respective building or zone. This includes all air handling units, fan coil units, outside air units, central chilled water plant, etc. Mechanical system graphics shall be displayed complete with all real time data relevant to the equipment being displayed including temperatures, flow rates, positions, etc.

E. Database Save/Restore/Back-Up

1. After all EMCS Controller software, Operator Workstation software, and Graphic slides have been developed, two complete backup sets of this software shall be delivered to the Owner for archiving. These backups shall be on the ZIP disk(s).

3.04 LanSTAR DISTRIBUTED DIRECT DIGITAL CONTROLLERS

A. New LanSTAR Controllers shall be installed as required to create a new building Controller LAN.

1. All new LanSTAR Controllers shall be installed as indicated on the drawings and in accordance with manufacturer instructions. 120 VAC Power shall be connected to each LanSTAR controller. If a Controller requires power at a different voltage or at a location other than as shown on the drawings, it shall be the work of this section to provide and install all necessary conduit, wiring, transformers, etc. and make the final connections. All power shall be verified as work of this section prior to powering the controllers.

2. All EMCS LanSTAR Controllers shall be installed in a factory enclosure that provides protection from the environment and is adequately ventilated to protect against excessive temperature exposure.

B. Communications

1. It shall be work of this section to connect all LanSTAR Controllers to the LanSTAR LAN. This work includes installation and troubleshooting of new media.

3.05 MicroSTAR DISTRIBUTED MODULES

A. General

1. New MicroSTAR Modules will be installed where required or indicated on the drawings to support the I/O requirements.

2. All MicroSTAR Modules shall be installed in accordance with manufacturer instructions. All MicroStar Modules shall be mounted in control panels as indicated on the drawings or as otherwise required to satisfy the I/O point density requirements. 120 VAC Power shall be provided to each control panel. If a device requires power at a different voltage or at a location other than as shown on the drawings, it shall be the work of this section to provide and install all necessary conduit, wiring, transformers, etc. and make the final connections. All power shall be verified as work of this section prior to powering the controllers.

B. Communications

1. It shall be work of this section to develop the MicroSTAR LAN. This work includes installation and troubleshooting of new media. All MicroSTAR Modules shall be connected to the MicroSTAT LAN network in a manner recommended by the manufacturer based on the environment, communications speed requirements, and distance.

C. Input/Output

1. The installation of all EMCS field control components and the associated I/O wiring back to the respective EMCS Controller will be installed under this section of the specification. Each point shall be checked by the contractor for voltage, short circuit, etc. prior to termination to the MicroSTAR Modules to

prevent potential damage to the controller.

D. Software Requirements

1. All sequences of operation as stated in the Contract Documents are to be implemented. In addition to these specific sequences, the following general requirements shall be implemented to for a complete operating software package.

E. Run Time Totalization

1. All digital input, digital output points, and digital software points (triggers or flags) shall be setup to accumulate totalized run time information. The frequency of accumulation and reset shall be based on report and trending requirements.

F. Alarms

1. The following analog input points shall have upper and lower limits established and alarms shall be generated in the event these limits are exceeded. These limits are generally defined as follows:

ALARM PARAMETER TABLE			
Point Type	**Low Condition**	**High Condition**	**Reset Condition**
Space Temperatures	5.0°F < active SP	5.0°F > active SP	2.0°F change
Supply Air Temperatures	5.0°F < SP	5.0°F > SP	2.0°F change
HW Temperature	20°F < SP	20°F > SP	5°F change
Duct Static	<90% of SP	> 110% SP	5% change
Velocity Pressure (Flow)	<90% of SP	> 110% SP	5% change
Static Pressure Space	<90% of SP	> 110% SP	5% change
Humidity	<90% of SP	> 110% SP	5% change

a. Digital inputs shall be compared to the associated digital outputs (i.e., fan start/stop vs. fan status) and alarms shall be issued if the commanded position is inconsistent with the actual condition, after a start delay timer of 30 seconds.

b. All digital points that represent actual alarm monitoring points (i.e., VFD alarm) shall display an alarm immediately upon indication of an alarm condition.

c. All alarms shall be directed to the Operator Workstation(s), printed on the alarm printer, and archived on the hard drive as routed by the user. The identity of the operator acknowledging the alarm shall be archived with the alarm message text.

G. Minimum Runtimes

1. All digital output points shall have a minimum runtime of 10 minutes to prevent accidental short cycling.

H. Staggered Starts

1. All digital outputs within a particular building shall have staggered start times of 15 seconds to minimize demand spikes, especially after a power failure restart.

I. Trend Analysis

1. The system shall be configured to trend all system points and display them both numerically and graphically. Date and time stamps shall accompany all trend data. The initial interval for all trend logs shall be configured for 15 minutes. Trend groups shall be identified as follows:

TREND LOG GROUPS (Typical of all units)	
Sub-System Function	**Group I/O & Software Points to Trend**
Fan Operations (Digital)	Occupied/Unoccupied Mode, Humidity Override Mode, VFD Alarm, VFD Start/Stop
Supply Air (Typical)	Supply Air SP, Supply Air Temp, Indirect/Direct Section Control, DX Control, Humidity Setpoint, Humidity Levels
Space Temperature Loop	Space Temp. SP, Max. Space Temperature, Min., Hot Water Valve Position, Primary air flowrate

3.06 TEMPERATURE ELEMENT AND TRANSMITTER

A. All temperature sensors shall be installed and wired under this section of the specification.

1. Immersion temperature sensors shall be installed in the thermo-wells provided with the sensor. The thermowells shall be supplied to the mechanical contractor for installation under other sections of the specification. A thermo-conductive paste shall be applied between the sensing element and the thermowell.

2. Outdoor air temperature elements shall be installed in a location that is continuously shaded and not affected by heat generating equipment or equipment intakes or discharges. The element shall be installed under a sun shield and high enough to avoid damage from vandalism.

3. Duct point temperature elements shall be installed directly on ductwork and the connection between the duct and the flange shall be gasketed and secured with sheet metal screws to prevent any air leakage. Care must be taken to avoid direct contact between the temperature element and any heat transfer surface such as a coil.

4. Duct averaging elements shall be installed with the same requirements as for the temperature point element however, the averaging element shall be extended across the entire duct area in a zigzag pattern. Special clips shall be used to

secure the element at turns to prevent chafing of the element. Where the element passes through the duct, plastic tubing or similar protection shall be installed on the element to prevent damage to the element from vibration.

5. Space temperature transmitters shall be installed 60" A.F.F.

3.07 HUMIDITY ELEMENT AND TRANSMITTER

A. Outdoor humidity transmitters shall be installed in a location not effected by equipment that might generate humidity or temperature effects. The transmitter shall be installed where direct moisture (rain) cannot contact the device.

B. Duct point humidity elements shall be installed directly on ductwork and the connection between the duct and the flange shall be gasketed and secured with sheet metal screws to prevent any air leakage. The sensing element shall be located at least 2 feet downstream of any coil, humidifier, or dehumidifier.

3.08 CURRENT TRANSDUCERS

A. Current transducers shall be installed on one hot leg of either single or three phase circuits and after the local disconnect. The transducer shall be securely mounted in the associated motor starter housing or motor control.

3.09 CURRENT SENSING SWITCH

A. Current switches shall be installed in one leg of three phase circuits and the hot leg of single phase circuits and in all cases, after the local disconnect. The switch shall be securely mounted in the associated motor starter housing or motor control. The switches shall be adjusted to close at approximately 10% of the attached loads full load amps.

3.10 CONTROL RELAYS

A. Control relays shall be mounted in the respective termination panel and are intended primarily to isolate the EMCS controller digital outputs from the source load. If a relay must be field mounted, it will be installed in a NEMA I housing.

B. Control relays shall be installed in bases and the based mounted on a DIN rail. All accessories including end clips, jumpers, etc. shall be provided. All wiring shall be labeled. Multiple conductors shall be bundled and run by Class in plastic wireways. Relays shall be labeled as indicated in the shop drawings for ease in troubleshooting.

C. Relay coils shall be wired complete with 24 VAC power such that a jumper (simulating an EMCS contact closure) will energize the control relay.

3.11 CONTROL TRANSFORMERS

A. Control transformers shall be mounted in the power panels as indicated on the drawings or as required for proper power for devices.

B. A phenolic label on each transformer shall identify the power source by breaker panel and circuit. Fusing of the primary and secondary sides and sizing shall be as required by the NEC.

3.12 AUTOMATIC DAMPERS

A. All automatic control dampers shall be provided and installed under other sections of the specification.

3.13 DAMPER ACTUATORS

A. Electronic Damper Actuators

1. Valve actuators shall be mounted on the valve bodies per manufacturer's reccomendations.

B. VAV Terminal Unit Damper Actuator

1. Damper actuators shall be mounted on the damper jack shaft or shaft extender using a "V" clamp. The actuator shall then be anchored to the ductwork housing the damper.

3.14 CONTROL VALVES

A. The valves shall be installed by the mechanical contractor under other sections of the specification.

3.15 CONTROL VALVE ACTUATORS

A. Electronic Valve Actuators

1. Damper actuators shall be mounted on the damper jack shaft or shaft extender using a "V" clamp. The actuator shall then be anchored to the ductwork housing the damper.

3.16 INPUT/OUTPUT AND INTERLOCK WIRING

A. General

1. All wiring located in mechanical spaces, chiller or boiler plants, outdoors, in exposed areas, or in areas of potential damage, regardless of class, shall be run a metallic raceway of the appropriate design for the application. Refer to Division 16.

2. All Class I and Class II conductors shall be selected and installed in complete compliance with the NEC, regardless of the definition of conductor types stated for each device type. The conductor types stated for each device type installation are provided to indicate the design intent only.

B. Class I Wiring

1. All wiring shall be installed in accordance with the NEC and Division 16. Class I and Class II wiring shall be separated as defined in Art. 725 of the N.E.C. All Class I circuits and all control or power circuits greater than 48 VAC or VDC shall be run in a metallic raceway. Conduit shall be run parallel with building

lines in a neat professional manner and supported as defined in Division 16.

C. Class II Wiring

1. All wiring shall be installed in accordance with the NEC and Division 16. Class II wiring run in hollow walls and in accessible concealed areas may be run without conduit, as local codes permit. Cables run loose shall be tied to building structures no less than every 6 feet and bundled where possible. Care shall be taken to avoid chafing at points of connection to the building. Cables run in conduit shall be installed in the same manner required for Class I conduit runs.

3.17 EQUIPMENT CONNECTIONS

A. EMCS Class II field wiring for all non-control device applications shall be installed under this section of the specification. This includes equipment such as VFD's, chillers, boilers, etc. that may have point types including status or alarms monitored from an equipment supplier Class "C" contact or analog control signals to equipment, etc.

3.18 DUCT STATIC PRESSURE STATION

A. Ensure that the direction of flow is observed when installing the probe to prevent measurement of total pressure. The connection between the duct and the flange shall be gasketed and secured with sheet metal screws to prevent any air leakage. Connections from the "HI" pressure port to the differential pressure transducer shall be 1/4" copper tubing, which shall not extend for more than ten (10) feet.

3.19 OUTSIDE AIR STATIC PRESSURE PROBE

A. Outside air static pressure probe must be installed and piped according to manufacturer instructions to ensure accuracy of the static pressure reading and eliminate the effects of condensation in the sensing lines. Coordinate installation of probe with the necessary trades for proper sealing of all roof penetrations.

3.20 DIFFERENTIAL PRESSURE TRANSMITTER (GASES)

A. All differential pressure transmitters shall be installed within ten (10) feet of the primary pressure sensing point. The transmitters shall be installed in a NEMA I housing for interior conditioned spaces and in NEMA 3R housings for outside or unconditioned spaces. The transmitters and housings shall be rigidly supported to prevent vibration and shall never be mounted to ductwork or piping. Proper access to the transmitter shall be provided.

B. Filter differential pressure transmitters shall be installed with pressure pitot tubes across the filter section. Connection between transmitter and pitot tubes shall be as specified in the Air Piping section of the specifications.

3.21 AIR FLOW ELEMENT AND TRANSMITTER

A. Air flow probes must be installed and piped according to manufacturer instructions to ensure accuracy of the velocity pressure reading and eliminate the effects of vibration in the sensing lines. The transmitters shall be located in the return section of the AHU next to the VFDs.

3.22 SMOKE AND FIRE DETECTORS

A. Smoke detectors and the associated wiring shall be installed in accordance with Section 16710.

3.23 DIFFERENTIAL PRESSURE TRANSMITTER (LIQUID)

A. All liquid differential pressure transmitters shall be installed within ten (10) feet of the pressure sensing points. The transmitter shall be rigidly supported to prevent vibration and shall never be mounted to ductwork or piping. The piping for the sensing points shall include isolation valves such that the transmitter can be removed without having to shut down the liquid system. Proper access to the transmitter shall be provided. The pressure ports shall be piped in hard Type L copper tubing.

3.24 TEMPERATURE CONTROL PANELS

A. All tubing and wiring shall be clearly labeled with Brady type marker labels and run to numbered terminal strips or tubing manifolds these wire, tube, and terminal numbers shall be shown on all control diagrams. Wires and tubes shall be labeled at all connection points.

B. All control devices shall be labeled with engraved phenolic tags showing device number and name, model number, setpoint, range, action, etc. Panel Face indicators Shall be labeled with engraved phenolic tags identifying what is shown on indicator.

C. Hard tubing shall be brought into the panel using bulkhead fittings, tubing within the panel may be plastic.

D. Terminal strips shall be provided in all control panels for the termination of all field wiring. An additional 25 percent but not more than 50 terminal strips shall be provided for future use. Terminal strips shall be rated for no less than 300 VAC, 1/4" in width, track mounted, and a slot provided for labeling strips. All terminals shall be labeled as shown on the as-built drawing. No more than two conductors shall be terminated on a single terminal.

E. Power Supplies shall be provided where shown or where required to meet the sequence of operation. Power Supplies shall be provided with a phenolic label identifying the source of power.

F. Wire duct shall be installed as indicated on the drawings and all wiring shall be placed in wire duct for a neat professional installation.

3.25 INDOOR STATIC AIR PROBE

A. Indoor static air probes shall be flush mounted in the ceiling in locations indicated on the drawings or as required.

B. Computer Room under floor static probes shall be surface mounted under the floor in locations indicated on the drawings or as required.

3.26 AIR PIPING

A. All air piping except that which is inside of control panels shall be in Type L Copper Tubing. Copper tubing shall be supported no less than every 3 feet and run in a neat professional manner parallel with building lines using strapping which is specifically designed for copper tubing. Tubing run loose shall be tied to building structures no less than every 3 feet and bundled where possible. Care shall be taken to avoid chafing at points of connection to the building.

B. Tubing shall be sleeved through all walls and floors. Flexible connections shall be installed at all equipment causing vibration.

3.27 CONTROL CIRCUIT BREAKERS

A. Circuit breakers shall be installed inside power panels on DIN rails.

3.28 VENTURI FLOW METER

A. The flow meter/ pressure transmitter shall be installed according to the manufacturers recommendations and tied into the EMCS. It shall be calibrated and certified by the manufacturer for accuracy and repeatability. The EMCS shall be programmed to calculate the flow rate as measured by the differential pressure in accordance with the venturi meter manufacturer's flow curves. The contractor shall set-up totalization logs in the EMCS for usage.

END OF SECTION

SECTION 15980

EFFLUENT MONITORING AND CONTROL STATION

PART 1 - GENERAL

1.01 RELATED DOCUMENTS

A. Drawings and general provision of Contract, including General and Supplementary Conditions and Division 1 Specification sections, apply to work of this section as if repeated herein.

B. Refer to Division 15, Sections 15010, "BASIC MECHANICAL REQUIREMENTS", 15030, "ELECTRICAL REQUIREMENTS FOR MECHANICAL EQUIPMENT" and 15050, "BASIC MECHANICAL MATERIALS AND METHODS".

1.02 DESCRIPTION

A. Furnish and install a complete shop fabricated and assembled effluent monitoring and control station, including but not limited to:

1. Graphic panel.
2. Cabinets and work surface.
3. Sink with faucet.
4. nstrumentation.
5. Control relays, devices, and pilot lights.
6. Enclosure.
7. All interior wiring and terminal strips.

B. Furnish and install remote mounted sensing devices for panel mounted instrumentation.

C. Refer to Division 16 - Electrical for electrical requirements.

D. Refer to Section 15492 - Liquid Effluent System for Piping and Valves.

1.03 QUALITY ASSURANCE

A. Manufacturer's Qualifications: Firms regularly engaged in manufacture of control panels of types, materials and sizes required, whose products have been in satisfactory use in similar service for not less than 5 years.

B. Codes and Standards:

1. NEC Compliance: Comply with NEC as applicable to wiring methods, construction, and installation of panel boards.

2. NFPA Compliance: Comply with NFPA as applicable to wiring methods, construction, and installation of motor starters. No. 70 National Electrical Code.

3. UL Compliance and Labeling: Comply with applicable requirements of UL 508, "Electrical Industrial Control Equipment" pertaining to electrical motor starters. Provide components which are UL listed and labeled where available.

4. IEEE Compliance: Comply with applicable requirements of IEEE standards pertaining to panel boards.

5. ANSI Compliance: Comply with applicable requirements of ANSI standards pertaining to panel board assemblies.

6. NEMA Compliance: Comply with applicable portions of NEMA Standard ICS 2, "Industrial Control Devices, Controllers and Assemblies", and Publication No. 250, "Enclosures for Electrical Equipment" (1000 Volts Maximum), pertaining to motor controllers/starters and enclosures. Panel board shall be fabricated to comply with NEMA Standard 3R "Raintight".

1.04 SUBMITTALS

A. All submittals shall comply with the requirements of Section 01300: "SUBMITTALS" and Section 15010: "BASIC MECHANICAL REQUIREMENTS".

B. Shop Drawings: Submit complete fabrication drawings for the entire monitoring-control station, showing how it is to be fabricated and how the individual components are to be integrated into its construction. Show details indicating how the completed station will be integrated into the vault; how it is flashed and sealed, and how it is secured.

C Product Data: Submit manufacturer's technical product data and installation instructions for control components, materials, and products.

D. Wiring Diagrams: Submit wiring diagrams for the graphic panel showing connections to electric controls, power, instrumentation, and all internal and external connections. Clearly differentiate between portions of wiring that are manufacturer or fabricator installed, and portions that are to be field-installed.

E. Record Drawings: At project closeout, submit record drawings of installed monitoring-control station in accordance with requirements of Division 1.

PART 2 - PRODUCTS

2.01 MATERIALS AND PRODUCTS:

A. Provide piping and materials and factory-fabricated products of sizes, types, pressure ratings, and capacities as specified. Where not specified, provide proper selection to comply with installation requirements. Provide sizes and types matching piping and equipment connections; provide fittings of materials which match pipe materials used in industrial waste systems. Where more that one type of materials or products are indicated, selection is Contractor's option.

2.02 BASIC IDENTIFICATION

A. Provide identification complying with Section 15190: "MECHANICAL IDENTIFICATION", in accordance with the following listing.

B. Aboveground Liquid Effluent Piping: Plastic pipe markers.

C. Engraved plastic-Laminate Signs:

1. General: Provide engraving stock melamine plastic laminate, complying with FS L-P-387, in sizes and thicknesses indicated, engraved with engraver's standard letter style of sizes and wording indicated, black face and white core plies (letter color) except as otherwise indicated, punched for mechanical fastening except where adhesive mounting is necessary because of substrate.

2. Thickness: 1.5 mm *(1/16")*, for units up to .01 m^2 *(20 sq. in.)* or 200 mm *(8")* length; 3.2 mm *(1/8")* for larger units.

3. Fasteners: Self-tapping stainless steel screws, except contact-type permanent adhesive where screws cannot or should not penetrate substrate.

2.03 GRAPHIC PANEL

A. The graphic panel shall be made up by laminating several layers of polyester laminate over a sheet of 3.2 mm *(1/8")* aluminum substrate. The final finished surface shall be texture non-glare. The graphics shall be integrated into the laminate. Background color shall be beige, components colors shall be as selected by the Sandia Delegated Representative.

1. Control Graphics Corp. - Source, McHaney Engineering, Inc., Concord, CA.

2. Yamas Co., South San Francisco, CA.

3. Sunburst Displays, Ogden, UT.

2.04 ENCLOSURE

A. The monitoring and control station enclosure shall be fabricated from steel of the following metal gauges: 2.7 mm *(12 gauge)* steel for back, sides, top; 3.5 mm *(10 gauge)* steel for equipment mounting plate and bottom; angle and support fame shall be minimum 3.2 mm *(1/8")* thick. Fabrication shall be break-formed where possible rather than frame and panel. Graphic panel and flush-mounted instruments shall be installed on hinged doors. Hinges shall be piano type continuous stainless steel with stainless steel hinge pins. Hinge metal gauge shall equal panel thickness. Doors and panels shall be gasketed. Overall construction shall comply with NEMA 3R standards. Panel finish shall be smooth (not wrinkle) finish epoxy enamel applied over suitable primer. Color as selected by Sandia Delegated Representative.

B. Manufacturer: Subject to compliance with requirements, provide panel enclosure from one of the following:

1. Hoffman Engineering
2. Plough Electric
3. Superior Electric

2.05 PANEL-MOUNTED WIRING DEVICES:

A. Devices for Graphic panel shall be 22.5 mm. miniature modular type devices consisting of an operator plus a contact block. Mounting hole diameter shall be 22.3 mm; horizontal minimum centerline spacing, 30 mm; vertical centerline spacing, 50 mm. The basis for design is Square D, Class 9001, Type KX.

B. Push button switches: Push-push type maintained contact and momentary contact type both with pilot light. Bezel shall be square chrome plated. Illuminated push buttons, color as shown on drawings.

C. Pilot lights: Color as shown on drawings.

D. Keyed Switch: Switch shall be a two-position-maintained key-operated selector with a captive key feature. The switch contacts shall be closed with the key in the captive position and open with the key removed. Bezel shall be square chrome-plated. Square D #D2L or equal.

E. Control Relays: Relays shall be general purpose control type flange mounted inside the panel, 120V, AC coil with 10A, 3PDT Form C contacts, Square D Class 8501. Type KF-13 or equal.

F. Alarm Horn: Horn shall be provided inside the panel and shall be grille type, 120V, Edwards Cat No. 874 or equal.

G. Miscellaneous devices: Other devices shown on the drawings and mounted in the graphic panel shall be matching devices of the same manufacturer.

H. Engraving: Push-button and pilot light lens caps, etc. shall be engraved with captions as listed on the drawing schedules. Engraving shall be right justified.

I. Manufacturers: Subject to compliance with requirements, provide devices from one of the following:

1. Square D. (basis for design)
2. Allan Bradley
3. Cutler-Hammer.

2.06 BASE CABINETS AND WORK SURFACE:

A. Cabinets shall be standard steel constructed modular laboratory base units, 746 mm *(29-3/8")* high x 549 mm *(21-5/8")* deep, and of the widths shown. Units shall be Hamilton numbers indicated or equal.

1. Sink base unit, No. 113S422
2. Combination unit, No. 148S822
3. Cupboard unit, No. 103S422

B. Color shall be as selected by the Sandia Delegated Representative.

C. Work surface shall be Hamilton No. 20L441 "Hamiltex", or equal, work surface top with noncoved backsplash and reagent shelf.

D. Manufacturer: Subject to compliance with requirements, provide furniture of one of the following:

1. Hamilton
2. Kewaunee

2.07 SINK AND FAUCET

A. Furnish a Stainless steel sink and gooseneck faucet and mount in work surface enclosure.

B. Sink: 1.3 mm *(18 gauge)*, type 302 stainless steel, self-rim, single compartment, overall size 483 mm *(19")* wide x 381mm *(15")* front to back, bowl size 406 mm *(16")* wide x 292 mm *(11-1/2")* front to back x 191 mm *(7-1/2")* deep.

1. Strainer and tail piece - stainless steel.

2. Waste - Fuseal - no trap required.

3. Manufacturer: Subject to compliance with requirements, provide sink from one of the following:

a. Elkay. (Basis for design)

b. Just.

c. American Standard.

C. Gooseneck Faucet: Single rigid gooseneck spout with integral valve. Aerator nozzle.

1. Manufacturer: Subject to compliance with requirements, provide faucet from one of the following:

a. Chicago Faucet #927 (Basis for design)

b. Lab Line

c. American Standard

2.08 SAMPLING TUBES

A. General: Flow indicators/sight glass shall be made of polypropylene with stainless steel tie bolts, borosilicate glass, viton seals, standard FPT socket ends. Length: size as shown on drawings.

B. Manufacturers: Subject to compliance with requirements, provide sight glass of one of the following:

1. Plast-O-Matic, Inc.

2. Ernst Gauge Co.

2.09 SAMPLING PIPING

A. Refer to Section 15492: Liquid Effluent System.

2.10 INSTRUMENTATION

A. General: Unless indicated otherwise, all instruments are mounted in the enclosure.

B. pH Sensor/Transmitter:

1. Tank-mounted pH sensor shall consist of the sensing element, submersible type sensor holder, removable mounting bracket, mounting bracket clamp assembly, and interconnecting wire to transmitter long enough to permit removal from tank for calibration.

2. Tank-mounted pH transmitter shall consist of transmitter with local digital readout of 2 to 12 pH, calibration capability, wiring to sensor, wiring to power supply in remote panel. Transmitter shall provide a 4-20 MADC proportional signal to remote recorder.

3. All devices shall be provided with NEMA 4x waterproof enclosures.

4. Manufacturers: Subject to compliance with requirements, provide pH sensors and transmitters of the following:

   a. Sensor: Horiba #ED-6111
   b. Sensor Holder: Horiba #HI-1-911
   c. ransmitter: Horiba #TA-121210

5. ource: McHaney Engr., Concord, CA.

C. Level Sensor/Transmitter:

1. Tank-mounted level sensor shall be dielectric type combination sensor/transmitter with ground sheath, length approximately 10 feet, consisting of electronic sensor head, probe, ground sheath, removable mounting bracket and sensor holder. Allow sufficient slack cable to permit calibration.

2. Device with be provided with NEMA 3R waterproof enclosures.

3. Device shall provide a 4-20 MADC proportional signal to the remote recorder.

4. Manufacturer: Subject to compliance with requirements, provide level sensor/transmitter of the following:

   a. Delta Controls, type 161

5. Source:McHaney Engr., Concord, CA.

D. Recorders:

1. Recorders shall be circular chart type, galvanometric, single channel units for panel mounting, complete with bezel. Input 4-20 MADC, accuracy ±2%, overall size 92 mm *(3-5/8")* W x 143 mm *(5-5/8")* H x 110 mm *(4-5/16")* D, 120 volt chart motor, chart speed to be selected.

2. Provide 1 case spare chart paper for installation.

3. Manufacturer: Subject to compliance with requirements, provide recorders of the following:

a. ISCO Model 2410, or approved equal.

4. Source: McHaney Engr,. Concord, CA

E. Digital Readout Meters:

1. Digital readout meters shall be panel-mounted units with 3-1/2 digit, 15 mm *(0.60")* high, LCD type display, input signal 4-20 MADC, universal current loop type meter. Front face size 48 mm *(1.89")* H x 100mm *(4.0")* W x 100 mm *(3.9")* D.

2. Manufacturer: Subject to compliance with requirements, provide meter of the following:

a. Non Linear Systems, Inc., Series RM digital panel meter

3. Source: McHaney Engr., Concord, CA.

F. Power Supply:

1. Power supply unit for instrumentation shall have input voltage 120 VAC, output 24 VDC, 1.2 amps, overall size approximately 150 mm *(5-7/8")* H x 80 mm *(2-5/8")* D, surface-mounted type.

2. Manufacturer: Subject to compliance with requirements, provide the following:

a. Blue Line DC Supplies, Model CPS 30-24/28

3. Source:McHaney Engr., Concord, CA.

G. Level Detector:

1. Remote mounted probe type level detector shall be conductance activated Type units. Enclosure shall be NEMA 4x waterproof, probes shall be plastic sheathed, length as required. Mounting shall be MPT.

2. Relay unit for the detectors shall be in a NEMA 1 enclosure and is mounted in the control station.

3. Wiring between sensor and relay is in EMT covered under Division 16 Electrical.

4. Mounting of sensor as shown on drawings.

5. Manufacturer: Subject to compliance with the requirements, provide one of the following:

a. Warrick Co.
b. Magnetrol
c. Delta

2.11 OVERHEAD COILING DOOR

A. Furnish an overhead coiling door as a complete unit including hardware, housing for coiled door and counterbalance spring, tracks and accessories.

B. Provide setting drawing for enclosure fabricator, templates, instruction, and directions for installation.

C. Design the coiling door for a 957 pa *(20 psf)* wind load.

D. Fabricate unit to permit manual lifting and closing with maximum required pull of 4.5 kg*(10 pounds)*. Provide 2-point latch with keyed lock.

E. Counterbalance door by means of adjustable steel helical torsion spring, mounted around a steel shaft and mounted in a spring barrel and connected to the door curtain with the required barrel rings. Use grease-sealed bearings or self-lubricating graphite bearings for rotating members.

F. Steel Door Curtain Slats: Structural quality, cold-rolled galvanized steel sheets complying with ANSI/ASTM A446, Grade A, with G90 zinc coating, complying with ASTM A525, and phosphate treated before fabrication.

G. Endlocks: Malleable iron castings galvanized after fabrication, secured to curtain slats with galvanized rivets. Provide locks or alternate curtain slats for curtain alignment and resistance against lateral movement.

H. Bottom Bar: Consisting of 2 angles, each not less than 40 x 40 x 3.2 mm *(1-1/2" x 1-1/2" x 1/8")* thick, either galvanized or stainless steel or aluminum extrusions to suit type of curtain slats.

I. Curtain Jamb Guides: Fabricate curtain jamb guides of steel angles, or channels and angles with sufficient depth and strength to retain curtain loading. Build up units with minimum 4.8 mm *(3/16")* thick steel sections, galvanized after fabrication. Slot bolt holes for track adjustment.

J. Manufacturers: Subject to compliance with requirements, provide doors from one of the following:

1. J. G. Wilson, Source: Schultz-Dewey Co., San Leandro, CA (Basis for Design)
2. Cookson
3. Kinnear

PART 3 - EXECUTION

3.01 INSPECTION

A. Installer must examine areas and conditions under which enclosure and components are to be installed, and notify Contractor in writing of conditions detrimental to proper completion of work. Do not proceed with work until unsatisfactory conditions have been corrected in a manner acceptable to Installer.

3.02 INSTALLATION

A Install enclosure as indicated, in accordance with recognized industry practices to ensure that the enclosure complies with requirements of NEMA and NECA Std PB 2.1, and NECA's "Standard of Installation".

B. Coordinate with other work including electrical and piping work, as necessary to interface installation of panel board with other work.

3.03 ADJUSTING AND CLEANING

A Adjust operating mechanisms for free mechanical movement.

B. Touch up scratched or marred surfaces to match original finish.

3.04 GROUNDING

A. Provide equipment grounding connections for panel boards as indicated. Tighten connections to comply with tightening torques specified in UL Std 486 A to assure permanent and effective grounds.

3.05 FIELD QUALITY CONTROL

A. Prior to energization of circuitry, check all accessible connections.

B. Prior to energization of panel board, check with ground resistance tester phase-to-phase and phase-to-ground insulation resistance levels to ensure requirements are fulfilled.

C. Prior to energization, check panel board for electrical continuity of circuits, and for short-circuits.

D. Subsequent to wire and piping hookups, energize panel board and demonstrate functioning in accordance with requirements. Where necessary, correct malfunctioning units, and then retest to demonstrate compliance.

END OF SECTION

SECTION 15990

TESTING, ADJUSTING, AND BALANCING

PART 1 GENERAL

1.01 RELATED DOCUMENTS

A. Drawings and general provisions of Contract, including General and Supplementary Conditions and Division 1 Specification sections, apply to work of this section as if repeated herein.

1.02 DESCRIPTION

A. The Contractor shall employ the services of an independent testing, adjusting, and balancing agency meeting the qualifications specified below, to be the single source of responsibility to test, adjust, and balance the building mechanical systems identified above, to produce the design objectives. Services shall include checking installations for conformity to design, measurement, and establishment of the fluid quantities of the mechanical systems as required to meet design specifications, and recording and reporting the results. The Testing, Adjusting, and Balancing Agency will proceed with testing and balancing after Sandia Delegated Representative has been notified when the tests are to be conducted. Acceptable Contractors to perform the following work are either Raglen System Balance, Inc., Reno, NV; or Air Metrics Inc., Alameda, CA. No other Contractors will be approved.

1. Air balance and testing shall not begin until system has been completed and is in full working order. The Contractor shall put all heating, ventilating, and air-conditioning systems and equipment into full operation and shall continue the operation during each working day of testing and balancing. All tests shall be in accordance with NEBB (National Environmental Balancing Bureau) or AABC (Associated Air Balance Council).

2. After completion of test and balance work, the Sandia Delegated Representative, at his discretion, may request a recheck or resetting of any outlet, supply air fan, or exhaust fan as listed in test report. The Contractor shall provide technicians to assist the Sandia Delegated Representative in making any tests required during this period.

3. The Contractor shall coordinate and schedule this work in cooperation with other trades involved and comply with the completion date.

1.03 SUBMITTALS

A. Before the award of the TAB contract, the Contractor shall submit for approval a detailed proposal containing the following:

1 Qualifications of supervisory and TAB personnel. Included shall be special training and number of years experience in this field which qualify the employee for this work.

2. List of test instruments to be used.

3 Examples of test reports or report forms which will be used to produce the final report.

4. List of five most recent TAB jobs of comparable complexity.

B. Before the start of any work, the TAB Contractor shall submit for approval an outline for the proposed method of accomplishment and a schedule for doing the work.

C. After the work is complete, six copies of a final report, on approved forms, shall be submitted. Sample forms with minimum information content are included in this section for the applicable equipment tested.

PART 2 INSTRUMENTS

2.01 GENERAL

A. The TAB Contractor shall use instruments which are normally used for this type of work. Each instrument shall be properly maintained and frequently checked for calibration. Calibration dates of instruments used shall be shown on test report forms.

PART 3 EXECUTION

3.01 PRIOR TO TESTING REQUIREMENTS

A. Before any testing or balancing is started, an inspection of all HVAC equipment and systems shall be performed jointly by the TAB Contractor and the Contractor. The inspection shall establish that all systems are ready for testing and balancing, and have been operated for a minimum period of 24 hours. The TAB Contractor shall familiarize himself with all systems to be tested and balanced and the test points required. Any test openings, test wells, or other items required for the tests, as proposed by the TAB Contractor, shall be furnished at no increase in contract price to Sandia.

B. All filters shall be changed by contractor just prior to commencement of the balancing procedure.

C. Any air left trapped or detected during the hydronic balancing procedure will invalidate the data and the tests shall restart. Any lack of venting devices needed to remove the air from the system will be installed at the cost of the mechanical contractor per the direction of the SDR at no increase in contract price to Sandia.

D. If traverse or other points of measurement are deemed unsatisfactory or turbulent measuring points by the SDR, these measurements will be repeated by the direction of the SDR at no increase in contract price to Sandia.

E. The Contractor shall prepare the water systems for balancing in the following manner: Work shall include all specialized rooms, photographic equipment and laboratory process equipment, computer room and heat exchangers.

1. Open all valves to full open position. Close coil bypass stop valves. Set mixing valve to full coil flow.

2. Contractor shall remove and clean all strainers.

3. Examine water in system and determine if water has been treated.

4. Check pump rotation.

5. Check expansion tanks to determine that they are not air bound and the system is completely full of water.

6. Check all automatic air vents at high points of water systems and determine that all are installed and operating freely.

7. Set all temperature controls so all coils are calling for full cooling. This should close all automatic bypass valves at coil and chiller. The same procedure is to be used when balancing hot water coils; set on full call for heating.

8. Check operating of automatic bypass valve.

9. Check and set operating temperatures of heat exchangers and chillers to design requirements.

3.02 BALANCING OBJECTIVES

A. Test, adjust, and balance using the ratio or proportionate method of balancing only. Provide schematic drawings of each system balanced in the report; representations of

duct work and dampers for the air systems, piping, and all valves (control and balance) for the water system. Record initial readings at the beginning of the balance procedure with all balancing devices full open and all equipment operating parameters recorded. Each diffuser, register, and grille shall be identified as to location and area.

B. Balance all air outlets and water flow terminals to +/- 10% of design flows. See appropriate forms.

C. Adjust fan speed and modify pumps or controls as required to produce design flow.

1. Fans with variable speed drives shall be sheaved to deliver design airflows with clean air filters at 90% full speed or 54 Hz on variable frequency drives.

2. Obtain dirty filter pressure drop values for filters installed in the AHU and simulate this presssure drop (by obstruction through filter bank) at maximum scheduled air delivery and record the VFD frequency and filter pressure drop to determine if the fan will deliver rated airflow as sheaved with dirty filters.

D. Adjust system for design outside air quantity.

E. Adjust systems for design recirculating air quantity.

F. Adjust system for design exhaust air quantity.

G. Test and record heating and cooling apparatus entering and leaving air, water, and refrigerant temperatures. See appropriate forms.

H. Adjust flow patterns from air distribution devices to minimize drafts, and maintain room velocities $\leq$ 65 FPM at a room elevation of 5 feet.

I. Verify that all controls are functioning as intended.

J. Record all control pressure setpoints or flow setpoints needed by the control system from its own sensors (which may be located differently than balancers measurements) to properly operate individual equipment (fans, air handlers, VAV boxes, pumps, etc.) so the total combined system will operate as per designed.

K. Perform pitot tube traverse on main supply ducts to confirm fan design CFM.

L. Installed exhaust fans shall be tested, adjusted, and set for requirements as indicated on drawings.

M. Set chilled water, primary and secondary condenser water, and hot water pumps to proper gallons per minute delivery as shown on the pump schedule.

N. Adjust water flow of chilled water through chiller.

O. Cooling tower shall be checked and tested per ASME Test Code, PTC 23-1986.

P. Balance air and water flow through tower.

Q. Adjust water flow of hot water through heat exchangers. Check leaving water temperatures and return water temperatures though chiller and heat exchangers. Reset to correct design temperatures.

R. Adjust and balance heating and cooling coils, read pressure drop through coils at set flow rate on call for full cooling and on full heating. Set pressure drop across bypass valves, when used, to match coil full pressure drop. This prevents unbalanced flow conditions when coils are on full bypass.

S. Force heating and cooling systems to simulate worst case seasonal conditions for balancing purposes, i.e. cooling coils on AHU full open to check heating coil performance in summer, etc..

T. Perform pump shut-off test to check that appropriate impeller is really installed in pump indicated by model number.

3.03 TUTORIAL BALANCE PROCEDURE

A. The next section describes what is intended by a ratio or proportional balance method and is a step by step tutorial. This method is only a discussion of an air system but it is the exact procedure to be used on the hydronic system, also.

B. Ratio Or Proportional Method

1. The objective of the ratio method is to adjust dampers at each outlet so that the flow rates are <u>proportionally</u> equal. That is - the measured flow rate divided by the design flow rate (the "RATIO") is the same for all outlets. In-so-far as the balancing procedure is concerned, the RATIO may be either less than or more than 1.0. The focus of the procedure is to make RATIOS equal. At the conclusion of the balancing procedure, fan speed is adjusted so that all ratios are then equal to 1.0.

2. The beginning point for this procedure is the last terminal of the last branch (the one that is the greatest distance from the fan) of the system. In the system illustrated in fig. 1, the beginning point would be 21. This beginning point is also the <u>reference</u> <u>point</u> for the entire balancing procedure.

3. Since all measurements will be made in terms of velocity, it is recommended that all flow rates be converted to velocities. This can be accomplished by dividing design CFM by the K factor of the outlet.

4. It is also recommended that a worksheet - such as illustrated in Form A.12 - be prepared for recording data in the field. This along with a simple air flow diagram, such as fig. 1, would not only be used in the field, but would also be included in the start-up report.

5. Beginning with the last outlet of the system, the balancing procedure is as follows:

    a. Measure the air flow through outlet 21. It makes no difference what method is used to make the measurement so long as it is done with sufficient accuracy.

    b. Calculate the RATIO of Measured CFM/Design CFM.

    c. Leave outlet 21 wide open. This outlet will remain wide open for the entire procedure. However, the RATIO will change as flows to other terminals are adjusted. It is therefore necessary to refer back to 21 as these adjustments are made for comparison.

    d. Measure the flow rate though outlet 20, and calculate a RATIO. Again, it's:
    MEASURED CFM = RATIO
    DESIGN CFM

    e. Adjust the damper at 20 so that the RATIO of 20 is the same as the RATIO of 21. Remember that the ratio of 21 will increase when the flow rate through 20 is decreased and that it is necessary to refer back to 21 for the up-to-date ratio.

    f. Measure the flow rate though terminal 19, calculate a ratio, and compare with 21.

    g. Make adjustments as required to make the RATIO of 19 the same as 21. It should be noted that it is unnecessary to re-measure 20 as its ratio will change in the same way as 21.

    h. Measure the flow rate through terminal 18, calculate a ratio, and compare with 21.

i. Make adjustments as required to make the RATIO of 18 the same as 21. It should again be noted that is unnecessary to re-measure 19 and 29 as their ratios will change in the same way as 21.

   All outlets of this branch are now balanced with respect to terminals of that branch, but not in respect to any other outlets. No further individual adjustment of these will be required.

j. Go to outlet 14, measure flow rate and leave wide open.

k. Make the ratio of 13 the same as 14.

l. Repeat for terminals 12 to complete the balance of the branch having outlets 12, 13, and 14.

m. Go to outlet 17, measure flow rate and leave wide open.

n. Make the ratio of 16 the same as 17.

o. Repeat for terminal 15 to complete the balance of the branch having outlets 15, 16, and 17.

p. Compare ratios of 14 and 17 and adjust dampers D-4 or D-5 as required to make the ratios equal. It is unnecessary to measure flow rate of other terminals since all flow rates of the branch change as a unit. Outlets 12 though 17 are now balanced with respect to each other, but not with respect to any other outlet of the system.

q. Go to outlet 11, measure flow rate and leave wide open.

r. Make the ratio of 10 the same as 11.

s. Repeat for outlet 9 to complete the balance of the branch having outlets 9, 10, and 11.

t. Compare ratios of 14 and 11 and adjust damper D-3 as required to make the ratios equal. Outlets 9 through 17 are now balanced with respect to each other, but not with respect to any other outlet of the system.

u. Compare ratio of 14 and 21 and adjust damper D-1 and D-2 as required to make the ratios equal. Outlets 9 though 21 are now balanced with respect to each other, but not with respect to outlets of the remaining branch.

v. Measure and adjust ratios of the remaining branch in the same manner.
w. Compare ratios of 21 and 8, and adjust dampers D-6 so that they are the same.

x. Measure system Total Flow Rate by traversing the main duct.

y. From fan law relationships, design air flow, and the air flow measurement in step "x", calculate new fan speed.

$$\text{Fan Speed Required} = \text{Fan Speed Measure} \times \frac{\text{Design CFM}}{\text{(Measured CFM)}}$$

z. Change fan drive to obtain the new fan speed. The system is now balanced at design.

aa. Report findings and make recommendations for any changes that are indicated.

3.04 ADJUSTMENTS

A. The Contractor shall make any changes in the pulleys, belts, dampers, or other fan drive components required for correct balance at no increase in contract price to Sandia.

B. In cooperating with the Control Manufacturer's Representative, set adjustments of automatically operated dampers to operate as specified, indicated, and/or noted. Contractor shall coordinate all controls for proper calibration and list all controls requiring adjustment.

C. Mark equipment settings, including damper control positions, valve indicators, fan speed control levers, and similar controls and devices, to show final settings. Mark with paint or other suitable, permanent identification materials.

D. Re-test, adjust, and balance systems subsequent to significant system modifications, and resubmit test results.

3.05 INSULATION

A. Cut insulation, ductwork, and piping for installation of test probes to the minimum extent necessary to allow adequate performance of procedures.

B. Patch insulation, ductwork, and housings, using materials identical to those removed.

C. Seal ducts and piping, and test for and repair leaks.

D. Seal insulation to reestablish integrity of the vapor barrier.

3.06 PERFORMANCE TESTS

A. General: Conduct capacity tests on all equipment. Tests shall be made during a period of stable operations and minimum load fluctuation. A performance report shall be submitted for each item tested which includes a comparison of installed capacity and design capacity. Guidelines for the required tests and reports are as follows:

B. Air Handling Unit: After air outlets have been balanced, determine total air flow. Then:

1. Adjust fan speed to give design air flow.

2. Record all static pressures to generate the air handler unit static pressure profile of all items within the air handler unit and complete forms A14 and A15 or other approved forms.

3. Record air temperatures entering and leaving each coil.

4. Records water flow rates, pressure, and temperatures, as described for coil.

5. Complete approved report forms A.4, A.14, A.15, A.17, A.18, or other approved forms as required to describe performance.

C. Chiller: For each chiller, measure and record the following information:

1. Entering and leaving chilled water temperature.

2. Entering and leaving condenser water temperatures.

3. Water flow rates for both chilled and condenser water.

4. Refrigerant temperatures and pressure. Check superheat.

5. Compressor power input readings of volts and amperes in each phase.

6. Complete approved report form similar to A.19, A.3.

D. Pumps: After terminals have been balanced, determine total flow through the pump. Then:

1. Adjust flow rate to design value or make recommendations for machining the pump impeller to give design flow as is indicated by data measured.

2. Record pump operating suction and discharge pressures, pump speed, voltage, and amperage.

3. Complete approved report form similar to A.13.

E. Cooling or Heating Coil: For each coil, the following information shall be recorded:

1. Water flow rate along with the method used to determine.

2. Water pressure entering and leaving coil. control valve, or balancing valve.

3. Water temperature entering and leaving.

4. Air flow rate.

5. Air temperature entering and leaving.

6. Complete approved report form similar to A.17 and A.18.

F. Electric Heating Coil: Observe and record the following:

1. Air flow rate.

2. Air temperature entering and leaving coil.

3. Current and voltage input to coil for each increment and total.

4. Complete approved report form similar to A.5.

G. Cooling Towers: Test in accordance with Cooling Tower Institute Specification - ATC-105, ASME PTC-23, or some other agreed upon standard.

H. Refrigeration Equipment: Similar to chiller.

I. Motors: Observe and record the following:

1. Voltage - nameplate vs. measured.

2. Amperage - nameplate vs. measured.

3. Motor speed.

4. Frame number.

5. Overload heater size.

3.07 TEMPERATURE CONTROL SYSTEMS

A. In cooperation with the representative of the control manufacturer, verify the setting of automatically operated devices to achieve the required sequence of operation and operate each device through its full range. Record and report temperature and humidity on a continuous recorder for a minimum of seven days. Make minor adjustments as required.

3.08 VIBRATION ISOLATION TESTING

A. The Contractor shall test each piece of vibration producing equipment to verify that the vibration transmission is within the specified limits. These tests shall be performed in accordance with applicable portions of Chapter 52 and 57 of the 1987 ASHRAE Handbook, "HVAC Systems and Applications". A report shall be submitted which includes the following items:

1. Equipment name and mark.
2. Disturbing frequency (lowest rpm of rotating equipment).
3. Supported weight.*
4. System resonance.
5. Static deflection.*
6. Type of isolators.*
7. Vibration measurement of structure (in mils) with isolators "blocked".
8. Vibration measurement of structure (in mils) with equipment "free floating".
9. Isolator efficiency.

*This data may be obtained from the vibration isolator manufacturer.

3.09 SPECIAL TEMPERATURE AND HUMIDITY ROOM TESTING

A. Apply specified air testing procedure.

B. Apply specified water testing procedure.

C. Test gas burning equipment.

D. Performance tests shall include:

1. Temperature
2. Humidity
3. Pressurization
4. Air Change Rate

E. Tests shall be documented and four (4) copies forwarded to SDR.

PART 4 PROJECT PERFORMANCE REPORT

4.01 GENERAL

A. The complete Project Performance Report shall be submitted upon the conclusion of the balancing and testing work. The report shall contain but not be limited to the following:

1. Table of Contents
2. Summary Report of All Systems for Mode Tested (heating or cooling)
3. A compiled set of fan curves and pump curves for every item tested within the scope of the report. Submit nomograph or balance valve calculator for every type of balance valve or flow restriction device installed and adjusted in this report.
4. Comparison of installed equipment capacity to design capacity.
5. Records of all readings taken.
6. List of test equipment used for each test with calibration dates.

Figure 1

EXEMPLARY AIR-FLOW DIAGRAM

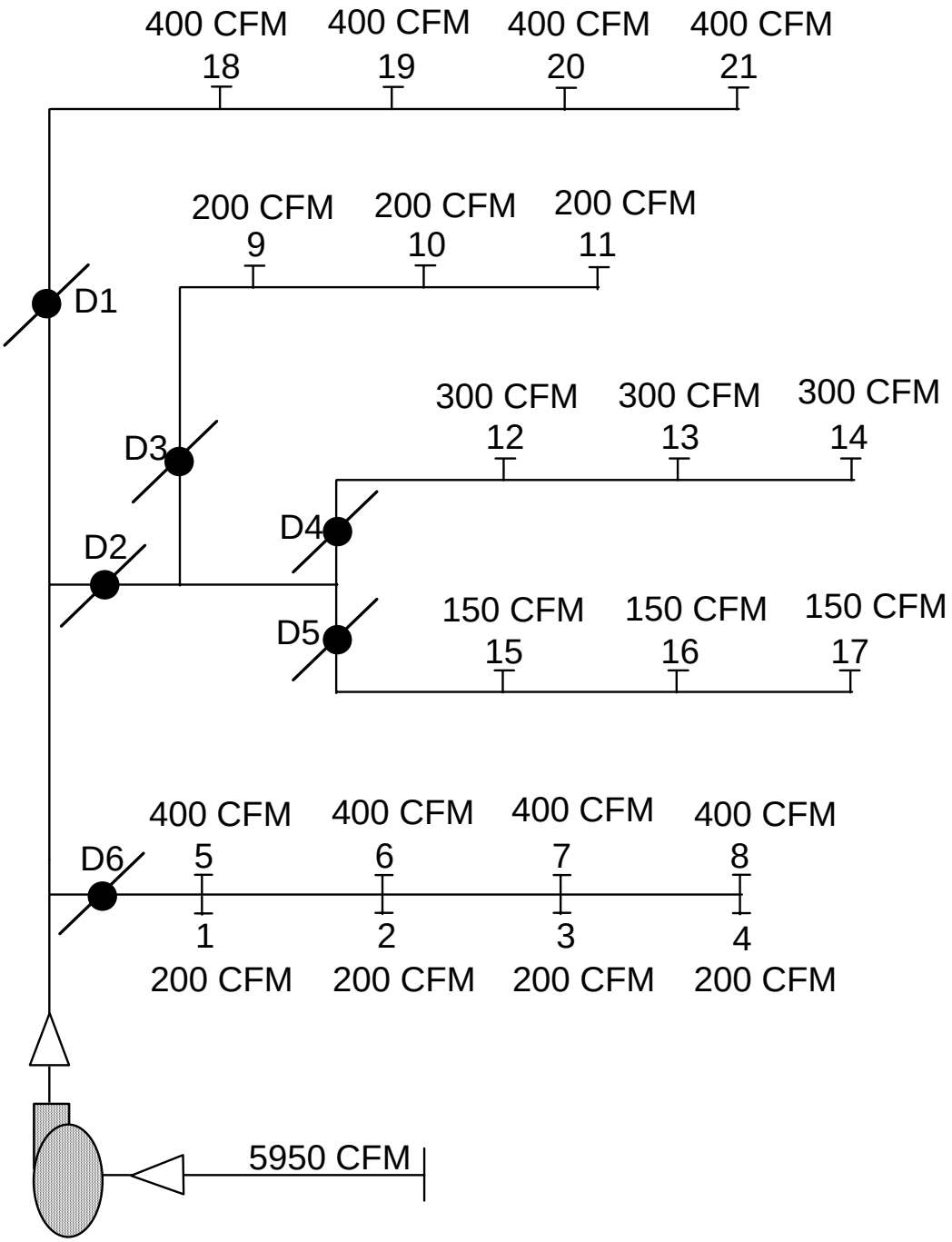

REPORT FORMS

Table of Contents

Fan Test Report A2

Air-Cooled Air Conditioning Test Report A3

Air-Handler Test Report A4

Electric Coil Test Report A6

Traverse Record A7

Duct Traverse Sheet A8

Duct Traverse Report A10

Exhaust Fan Test Report A12

Laboratory Hood Test Report A13

Outlet Test Report A15

Outlet Balance Worksheet A16

Pump Test Report A17

System Static Profile - Supply Fan (Only) A18

System Static Profile - Supply And Return Fans A15

Volumetric Tracking Test A16

Hot Water Coil Balance Test Report A17

Chilled Water Coil Balance Test Report A18

Water-Cooled Air Conditioning Test Report A19

Hydronic Outlet Balance Worksheet A20

Hydronic Outlet Balance Worksheet (Wide) A21

FAN TEST REPORT

JOB TITLE	LOCATION
TESTED BY	DATE

	DESIGN	ACTUAL
Make and Size		
R .P. M.		
Fan S. P.		
Total Suction (Total = V. P. + S. P.)		
S. P. Discharge		
Discharge CFM		
Sheave Size and Make		
Sheave Bore Size		
Sheave Keyway Size		
Number of Belts, Make and Size		
Centers Between Pulleys		
Motor Frame and Mfg.		
Motor HP		
Motor Voltage		
F. L. Amps/Measured Amps		
Motor R. P. M.		
Sheave Size and Make		
Sheave Bore Size		
Sheave Keyway Size		

Remarks:

AIR-COOLED AIR CONDITIONING TEST REPORT

SYSTEM NO.	
TESTED BY	**DATE**

	DESIGN	MEASURED
Refrigerant		
Compressor Capacity - Btu/hr		
Refrigerant Suction Pressure - psig		
Evaporator Temperature - Degrees F		
Refrigerant Discharge Pressure - psig		
Refrigerant Discharge Temperature		
Liquid Line Temperature		
Compressor HP		
Compressor Voltage		
Full-Load Amps		
Running Amps		
Evaporator Entering Air DBT - Degrees F		
Evaporator Entering Air WBT - Degrees F		
Evaporator Leaving Air DBT - Degrees F		
Evaporator Leaving Air WBT - Degrees F		
Fan RPM		
Evaporator Air Flow		
Fan Motor HP		
Fan Motor Frame No.		
Voltage		
Fan FL/RL Amps		
Fan Sheave Outside Diameter - Inches		
Fan Motor Sheave Outside Diameter - Inches		
Number and Size Belts		
Condenser Air Flow - CFM		
Condenser Air Entering DBT - Degrees F		
Condenser Air Leaving Temperature - Degrees F		
Super Heat - Degrees F		
Subcooling - Degrees F		

Comments:

AIR-HANDLER TEST REPORT

PROJECT	SYSTEM
TAB TECHNICIAN	SIGNATURE
DATE	

Unit No.						
Location						
Manufacturer						
Model No.						
	SPEC.	ACTUAL	SPEC.	ACTUAL	SPEC.	ACTUAL
Total CFM						
Return Air CFM						
O.S.A. CFM						
Total S.P.						
Suction Press						
Discarge Press						
Fan Sheave						
Motor Sheave						
Belts						
Motor Mfg.						
Motor HP						
Voltage						
Phase						
RPM Motor						
	RATED	RUNNING	RATED	RUNNING	RATED	RUNNING
Amperage						
RPM Fan						
Coil Bypass CFM						

ELECTRIC COIL TEST REPORT

JOB TITLE	DATE
SYSTEM NO.	TESTED BY

COIL NO.	RATED		MEASURED					CALCULATED	
	KW	AIR FLOW CFM	VOLTS	AMPS	AIR FLOW CFM	AIR TEMP. ENTERING	AIR TEMP. LEAVING	KW	BTU/HR

KW = 1000 watts = 3414 Btu
KW (calculated) for 1 phase heater = Volts x Amps
DW (calculated) for 3 phase heater = 1.73 x Volts x Amps
Btu/hr (calculated) = 1.08 x cfm (T Lv - T Ent)

TRAVERSE RECORD

JOB TITLE	LOCATION
TEST BY	DATE
DUCT SIZE	DUCT AREA

STATION	V. P. In. WATER	VELOCITY fpm	STATION	V. P. In. WATER	VELOCITY fpm

Air Flow = Duct Area x Average Velocity x Air Flow Correction Factor

= _____ sq. ft. x _____ fpm x _____ acfm

Design Air Flow = _____ acfm

DUCT TRAVERSE SHEET

PROJECT	SYSTEM
TECHNICIAN	SIGNATURE
DATE	

Duct Identification:		Design ACFM:
Duct Size:	Duct Area:	Design SCFM:
Air Flow Correction Factor (AFCF):		

	VELOCITIES or VELOCITY PRESSURES							
	1	**2**	**3**	**4**	**5**	**6**	**7**	**8**
1								
2								
3								
4								
5								
6								
7								
8								

NOTES: 1. Point 1: 1 is the left top of duct when facing direction of air flow

2. VELOCITY = 4005(VP)^.5

3. AFCF - is required when temperature or barometric pressure differs from standard.

4. ACFM = Average Velocity X Duct Area X Air Flow Correction Factor

5. SCFM = $\frac{\text{Average velocity X Duct Area}}{\text{Air Flow Correction Factor}}$

ACFM = _____ X _____ X _____ = _____

SCFM = (_____ X _____) — _____ = _____

DUCT TRAVERSE REPORT

PROJECT	**SYSTEM NO.**	
TAB TECHNICIAN	**SIGNATURE**	
DATE	**PAGE**	**OF**

TRAVERSE				REQUIRED		FIRST TEST			FINAL		
NO.	LOC.	DUCT SIZE	EFFECT AREA	VEL.	CFM	VEL. PRESS.	VEL.	CFM	VEL. PRESS.	VEL.	CFM

EXHAUST FAN TEST REPORT

PROJECT	SYSTEM NO.	
TAB TECHNICIAN	SIGNATURE	DATE

Fan No.								
Manufacturer								
Design CFM								
Actual CFM								
Design SP								
Actual SP								
Fan Sheave								
Motor Sheave								
Belts								
Motor HP								
Volts								
Amp Rating								
Actual Amp								
Design RPM								
Actual RPM								

Remarks:

LABORATORY HOOD TEST REPORT

JOB TITLE	DATE
SYSTEM NO.	TESTED BY

Hood Number				
Laboratory or Room No.				
Design				
Exhaust Volume - CFM				
Face Area - Sq. FT.				
Measured				
100% Open Face Area - Sq. Ft.				
Operating Face Area - Sq. Ft.				
No. of Velocity Readings				
Average of Velocity Readings - FPM				
Minimum Velocity Reading - FPM				
Air Flow by Traverse				
Face Velocity by Traverse				
Results of Smoke Test				
Results of Controls Check				

Remarks:

OUTLET TEST REPORT

JOB TITLE	DATE
SYSTEM NO.	TEST BY

No.	Size	K Facor	Design Cfm	Design Vel.	Velocity Test No. 1	Velocity Test No. 2	Final Actual Velocity	Final Actual Cfm

TOTAL ____________________

OUTLET BALANCE WORKSHEET

PROJECT:	TEST BY:	DATE:

DESIGN						ADJUSTMENTS						FINAL
No.	SIZE	Ak	CFM	VEL		VEL	R	VEL	R	VEL	R	CFM
					A							
					B							
					A							
					B							
					A							
					B							
					A							
					B							
					A							
					B							
					A							
					B							
					A							
					B							
					A							
					B							
					A							
					B							
					A							
					B							
					A							
					B							
					A							
					B							
					A							
					B							
					A							
					B							
					A							
					B							
					A							
					B							
					A							
					B							
					A							
					B							
					A							
					B							
					A							
					B							
					A							
					B							
					A							
					B							
					A							
					B							
					A							
					B							

PUMP TEST REPORT

JOB TITLE	**LOCATION**
BUILDING, SYSTEM	
NAME AND MODEL NUMBER	
TESTED BY	**DATE**

	DESIGN	**INITIAL**	**FINAL**
Suction Pressure			
Discharge Pressure			
Total Head			
GPM			
Motor HP			
RPM			
Voltage			
Full-Load Amps			
Frame Number			
No Load Amps			

Remarks:

SYSTEM STATIC PROFILE - Supply Fan (only)

PROJECT	SYSTEM NO.	
TAB TECHNICIAN	SIGNATURE	
DATE	PAGE	OF

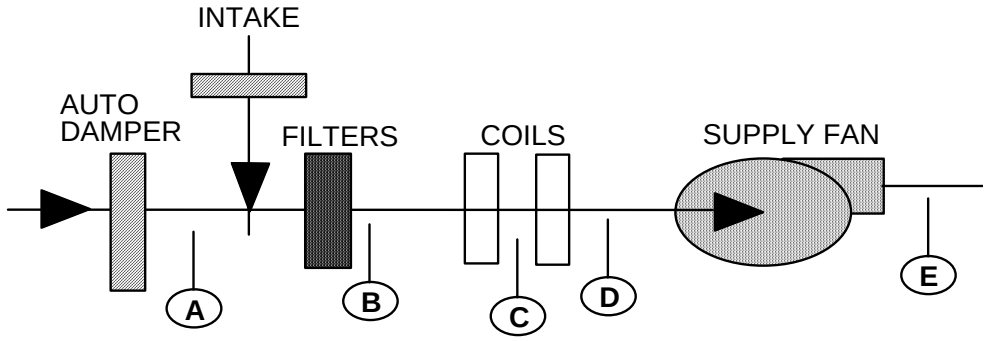

UNIT NO.	AUTO DAMPER POS.	A	B	C	D	E	SA FAN TOTAL STATIC

SYSTEM STATIC PROFILE - Supply and Return Fans

PROJECT	SYSTEM NO.	
TAB TECHNICIAN	SIGNATURE	
DATE	PAGE	OF

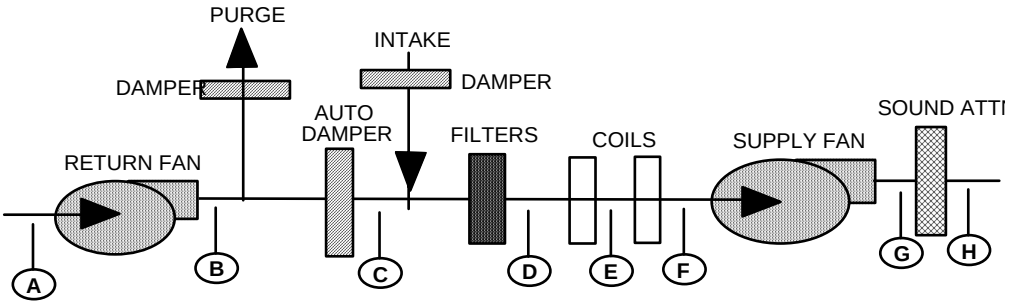

UNIT NO.	AUTO DAMPER POS.	A	B	RAFAN TOTAL STATIC	C	D	E	F	G	H	SA FAN TOTAL STATIC

VOLUMETRIC TRACKING TEST

PROJECT	**SYSTEM NO.**
DATE	
AREA OF SUPPLY MONITOR (SQ, FT,)	**AREA OF RETURN MONITOR (SQ. FT.)**

TEST NO.	DESIGN			AIR MONITOR READING					
	SUPPLY CFM	RETURN CFM	O.A. CFM	V.P. In.	SUPPLY CFM	V.P. In.	RETURN CFM	O.A. CFM	O.A. %

VCC PANEL READING					S P.	TRAVERSE READING			
TEST NO.	SUPPLY CFM	RETURN CFM	O.A. CFM	O. A. %		SUPPLY CFM	RETURN CFM	O.A. CFM	O.A. %

1. The objective of this test was to determine the effectiveness of the Return Fan in “tracking” the Supply Fan at reduced flow rates.
2. Air Monitor Air Flow = A Area x 4005 (VP)^1/2
3. Test No. 1 was run in the “Full Cooling” mode of operation. For all other tests, air flows were reduced by closing air valves with zone thermostats or by closing dampers.

HOT WATER COIL BALANCE TEST REPORT

JOB TITLE		DATE
SYSTEM NO.	COIL NO.	TESTED BY

	DESIGN	MEASURED
Air Flow - cfm		
Entering Air Dry Bulb Temperature - Degrees F		
Leaving Air Dry Bulb Temperature - Degrees F		
Entering Water Temperature - Degrees F		
Leaving Water Temperature - Degrees F		
GPM - From Energy Balance (1)		
Cv Control Valve		
Pressure Drop on Control Valve - psi		
GPM - Calculated from Valve (2)		
Pressure Drop on Coil		
GPM - From Coil Manufacturer's Curves		
Pressure Drop on Balancing Valve		
GPM - From BV Manufacurer's Curves		

(1) GPM = $\frac{1.08 \text{ cfm (Temperature Leaving Air - Temperature Entering Air)}}{500 \text{ (Temperature Water in - Temperature Water Out)}}$

(2) GPM= Cv [Pressure Drop in psi] ^1/2 ^1/2=square root

CHILLED WATER COIL BALANCE TEST REPORT

JOB TITLE		DATE
SYSTEM NO.	COIL NO.	TESTED BY

	DESIGN	MEASURED
Air Flow - cfm		
Entering Air Dry Bulb Temperature - Degrees F		
Entering Wet Bulb Temperature - Degrees F		
Leaving Air Dry Bulb Temperature - Degrees F		
Leaving Wet Bulb Temperature - Degrees F		
Entering Water Temperature - Degrees F		
Leaving Water Temperature - Degrees F		
Enthalpy Entering Air - Btu/lb.		
Enthalpy Leaving Air - Btu/lb.		
GPM - From Energy Balance (1)		
Cv Control Valve		
Pressure Drop on Control Valve - psi		
GPM - Calculated from Valve (2)		
Pressure Drop on Coil		
GPM - From Coil Manufacturer's Curves		
Pressure Drop on Balancing Valve		
GPM - From BV Manufacurer's Curves		

(1) GPM = $\frac{\text{4.5 cfm (Enthalpy Entering Air - Enthalpy Leaving Air)}}{\text{500 (Temperature Water Out - Temperature Water In)}}$

(2) GPM= Cv [Pressure Drop in psi] ^1/2 ^1/2=square root

WATER-COOLED AIR CONDITIONING TEST REPORT

SYSTEM NO.	
TESTED BY	DATE

	DESIGN	MEASURED
Refrigerant		
Compressor Capacity - Btu/hr		
Refrigerant Suction Pressure - psig		
Evaporator Temperature - Degrees F		
Refrigerant Discharge Pressure - psig		
Refrigerant Discharge Temperature		
Liquid Line Temperature		
Compressor HP		
Compressor Voltage		
Full-Load Amps		
Running Amps		
Evaporator Entering Air DBT - Degrees F		
Evaporator Entering Air WBT - Degrees F		
Evaporator Leavubg Air DBT - Degrees F		
EvaporatorLeaving Air WBT - Degrees F		
Fan RMP		
Evaporator Air Flow		
Fan Motor HP		
Fan Motor Frame No.		
Voltage		
Fan FL/RL Amps		
Fan Sheave Outside Diameter - Inches		
Fan Motor Sheave Outside Diameter -		
Number and Size Belts		
Condenser Water Flow - GPM		
Condenser Water Entering Temperature -		
Condenser Water Leaving Temperature -		
Super Heat - Degrees F		
Subcooling - Degrees F		

Comments:

HYDRONIC OUTLET BALANCE WORKSHEET

JOB TITLE	DATE
SYSTEM NO.	TEST BY

DESIGN				ADJUSTMENTS								FINAL	
NO.	IDENT.	PD	GPM	GMP	R	GMP	R	GMP	R	GMP	R	GMP	R

Legend: PD = Pressure Drop

$$R = \frac{\text{GPM Measured}}{\text{GPM}} \quad \text{or} \quad \left(\frac{\text{PD Measured}}{\text{PD Design}}\right)^{1/2}$$

Design

HYDRONIC OUTLET BALANCE WORKSHEET (wide)

JOB TITLE	DATE	SYSTEM NO.	TEST BY

NO.	IDENTIFICATION	DESIGN		ADJUSTMENTS												FINAL	
		PD	GPM	GMP	R	GMP	R	GMP	R	GMP	R	GMP	R	GMP	R	GMP	R

Legend: PD = Pressure Drop

$$R = \frac{GPM}{Measured} \quad \text{or} \quad \left(\frac{PD}{Measured}\right)^{1/2}$$

GPM PD Design
Design

END OF SECTION

SECTION 16050

GENERAL ELECTRICAL REQUIREMENTS

PART 1 GENERAL

1.01 DESCRIPTION

A. The work included under Division 16 of the specifications shall include complete electrical systems as shown on the drawings and as specified herein. Provide all supervision, labor, material, equipment, machinery, and other items necessary to complete the electrical systems. Documents do not undertake to show or list every item to be provided. When items not shown are required for proper operation of the system or required by code, such items shall be provided at no increase in contract price. Work shall include, but shall not be limited to the following general headings:

1. Feeders, Panelboards
2. Raceways, Wire, and Cable
3. Transformers
4. Devices
5. Lighting System
6. Fire Alarm System
7. Intrusion Alarm System
8. Secured and Unsecured Communication Systems
9. Public Address System

1.02 QUALITY ASSURANCE

A. Requirements of Regulatory Agencies:

1. In accordance with the following:

a. OSHA - Federal Occupational Safety and Health Administration
b. NEC - National Electrical Code (NFPA-70)
c. NESC - National Electrical Safety Code
d. NFPA - National Fire Protection Association
e. UBC - Uniform Building Code
f. Codes and regulations noted in other sections.

2. Nothing in the drawings or specifications shall be construed to permit work not conforming to applicable laws, ordinances, rules, or regulations.

3. When drawings or specifications exceed requirements of applicable laws, ordinances, rules, or regulations, drawings and specifications take precedence.

4. It is not the intent of the drawings or specifications to repeat code requirements, except where necessary for completeness or clarity.

5. If any of the above requirements are in conflict with one another or with the requirements of these specifications, the most stringent requirement shall govern.

6. All equipment is to be of a manufacturer regularly engaged in its manufacture.

7. All equipment shall be NRTL listed.

8. All products of a given manufacturer shall be the products of the same manufacturer.

B. Seismic protection for electrical equipment shall be in accordance with 2001 California Building Code Title 24 Part 2 section 1632 and as specified herein.

C. Reference Standards:

1. All materials and equipment shall comply with all applicable standards and requirements of the following:

a. ANSI - American National Standards Institute
b. ETL - Electrical Testing Laboratories
c. FS - Federal Specifications
d. IEEE - Institute of Electrical and Electronic Engineers
e. NEMA - National Electrical Manufactures' Association
f. NRTL - Natiuonally Recognized Testing Laboratory
g. NBS - National Bureau of Standards

1.03 SUBMITTALS

A. General:

1. Submit data for all materials and equipment in all sections of Division 16 in accordance with the requirements of Section 01300, "Descriptive Submittals", and as specified hereinafter.

2. Forward all submittals to the Sandia Delegated Representative (SDR), by "system" (i.e. 16500 Lighting System, 16710 Fire Alarm System, 16720 Intrusion Alarm System,etc.). Individually submitted items or incomplete submittals are not acceptable.

1.04 DRAWINGS AND COORDINATION WITH OTHER WORK

A. Drawings:

1. Drawings are essentially diagrammatic to the extent that many offsets, kicks, bends, special fittings, and exact locations of items are not indicated, unless specifically dimensioned.

2. Exact routing of wiring and locations of outlets, panels, switches, etc. shall be governed by structural conditions or obstructions. Make use of data in contract documents. In addition, the SDR reserves the right to make any reasonable change in the location of electrical items prior to "roughing-in".

3. Dimensions, locations of doors, partitions, and similar physical features shall be taken from the architectural drawings and verified at the site under this Division. Consult architectural drawings for exact location of all electrical devices to center with architectural features, panels, etc. at the approximate location shown on the electrical drawings.

4. Mounting heights of brackets, outlets, switches, etc. shall be as specified.

5. Drawings indicate routes of all branch circuits. All runs to panels are indicated as starting from the nearest outlet and pointing in the direction of the panel. Continue all such circuits to the panel.

B. Coordination

1. Work out all "tight" conditions involving work under this division and work in other divisions in advance of installation. Provide supplementary drawings and additional work necessary to overcome "tight" conditions.

2. Provide templates, information, and instructions to other divisions to properly locate holes and openings to be cut or provided for electrical work.

C. Equipment Rough-in:

1. Rough-in locations shown on electrical drawings for equipment furnished by owner and for equipment furnished under other divisions are approximate only. Obtain exact locations from the following sources:

    a. From shop drawings for contractor furnished and installed equipment.

    b. From architect or architectural section for owner furnished, contractor installed equipment.

    c. From existing equipment, where such equipment is accessible on site.

2. Verify electrical characteristics of equipment before starting rough-in. Where conflict exists between equipment and rough-in shown on drawings, obtain clarification from SDR, and proceed as directed.

3. Provide direct raceway and conductor termination from building wiring system to equipment terminals for direct connected equipment which is contractor furnished and contractor installed, owner furnished and contractor installed, and for all existing equipment that is relocated by the contractor.

PART 2 PRODUCTS

2.01 MATERIALS

A. Identify materials and equipment by manufacturer's name and nameplate data. Remove unidentified materials and equipment from site.

B. Equipment specified by manufacturer's number shall include all accessories, controls, etc. listed in a catalog as standard with equipment. Furnish optional or additional accessories as specified.

C. Where no specific make or model of material or equipment is mentioned, any first class product of reputable manufacturer may be used.

D. Equipment or materials damaged during transportation, installation, or during initial acceptance operation are considered as totally damaged and unacceptable. Replace with new. Variance from this is only permitted by prior written permission from the SDR.

E. Provide an authorized representative to constantly supervise the work of this division. This includes checking all materials prior to installation for conformance with drawings, specifications, and shop drawings.

PART 3 EXECUTION

3.01 INSTALLATION

A. Manufacturer's Directions: Follow manufacturer's furnished directions covering points not specified or shown.

B. Equipment: Accurately set and level with supports neatly placed and properly fastened. Properly fasten equipment in place with bolts to prevent movement. No allowance of any kind will be made for negligence not to foresee means of bringing in, installing, or removing equipment inside the building.

C. Conduit systems:

1. Work into complete, integrated arrangement with like elements to make work neat in appearance.

2. Run concealed, except as shown or noted otherwise; where exposed, parallel walls or structural elements; horizontal runs level and flush with wall; vertical runs plumb, one unistrut width out from horizontal runs and parallel with structures as appropriate; groups racked together neatly with both straight runs and bends parallel and uniformly spaced.

3. Install with adequate passageways free from obstructions, as high as practical to maintain head room as shown or required. Secure approval from the SDR whenever the headroom will result in less than 2.3 m (7 feet 6 inches) clear.

4. Conduit above floor may be EMT in sizes 13 mm to 100 mm (1/2 inch to 4 inch). RSC or IMC conduit may be used in all sizes in all locations. Aluminum conduit is not permitted. All exposed conduit below 3 m (10 feet) shall be Schedule 80 PVC, IMC, or RSC where subject to physical damage.

5. Penetrations: (Where sleeves are used)

   a. Pack space between conduit and sleeve in walls with non-combustible materials.

   b. Make penetrations through floors water-tight with mastic, even if concealed within wall or furred space. Provide suitable flange below slab to prevent packing from falling out. Caulk space between conduit and concrete to full concrete height with mastic.

   c. Make penetrations through any weatherproof surfaces by appropriate means to maintain integrity of system penetrated. Include penetrations caused by hangers suspended off such surfaces.

6. All underground conduit shall be installed with a minimum 100 mm (4 inch) envelope of clean sand surrounding the conduit. Backfill shall conform with the requirements of Division 2200. Install Sandia furnished warning tape 300 mm (12 inches) below finished grade.

D. Hangers, Supports, Anchors, and Chases:

1. Provide as required for complete installation of all electrical work.
2. Equipment to be of metal only.
3. Provide hangers, anchors, and supports for conduit runs.
4. Provide concrete insets for attachment of hangers.
5. Provide anchors for floor and wall mounted equipment.
6. Provide supports for wall mounted equipment .

3.02 PERFORMANCE

A. Cutting and Repairing:

1. Do all cutting and repairing, including structural reinforcing, for work under this division.

2. Do no cutting or patching without approval. Repair damage done by cutting.

3.03 TESTING AND ADJUSTING

A. Furnish all labor and test equipment required under this division.

B. Test panels for grounds, shorts, or opens with circuit breakers closed, fixtures in place, and all wall switches closed before energizing services.

C. Test each individual circuit at panel with equipment connected for proper operation.

D. Ground tests shall meet requirements of NEC.

E. Upon completion of work, make final inspection and operate equipment to satisfaction of SDR.

F. Upon completion of work, provide written certification that all systems are functioning properly.

3.04 CLEANING, PAINTING & TIGHTENING

A. Refinish work supplied if damaged.

B. Clean and tighten nuts, bolts, lugs, connections, etc. of all equipment and enclosures to manufacturer's specifications.

C. Clean exposed conduit panels (interiors and exteriors), fixtures, equipment, and leave in satisfactory condition.

3.05 EQUIPMENT IDENTIFICATION

A. Provide clear background, white letter, 15 mm (1/2 inch) embossing label on all visible receptacles, switches, junction boxes, outlets, and other devices, with appropriate identification. Use of permanent markers in concealed areas only with prior written approval of the SDR.

B. Identify panelboards, circuit breakers, motor disconnect switches, starters, equipment enclosures, etc. by means of engraved laminated plastic descriptive nameplates (black with 6 mm (1/4 inch) high white lettering) mounted to apparatus with clear, 30 year silicone caulk.

C. Provide numbered band on each wire in all junction boxes and enclosures indicating circuit or wire number corresponding to those on contract drawings. In addition mark branch circuit numbers on the cover of all junction boxes.

D. Provide identification using Brady Tags or equivalent on all conduit, 6 m (20 feet) on centers in exposed areas and upon entering or leaving an area, for the following:

1. 120/208 Volts (120/208).
2. 277/480 Volts (277/480).
3. Intrusion Alarm (IA).
4. Fire Alarm (FA).
5. Unsecured Communication (UNS).
6. Secure Communication (PDS Stickers furnished by Sandia).
7. Public Address (PA).

END OF SECTION

SECTION 16120

WIRE, 600 VOLTS AND BELOW

PART 1 GENERAL

1.01 DESCRIPTION

A. Work included in this section: Materials, equipment, and fabrication for the following:

1. 600 Volt Wire and Below

PART 2 PRODUCTS

2.01 600 VOLT WIRE AND BELOW

A. 600 volt wire and cable, complete with accessories; sizes in mm2, except as noted.

B. Conductors:

1. Stranded copper for all sizes.

2. For General Use: Minimum size 4 mm2 (#12 AWG). At 120 volts and over 30 m (100 feet) circuit length, minimum size 6 mm2 (#10 AWG). At 277 volts and over 60 m (200 feet) circuit length, minimum size 6 mm2 (#10 AWG).

3. Control Wire: Minimum size 2.5 mm2 (#14 AWG). At 120 volts and over 60 m (200 feet) circuit length, minimum size 4 mm2 (#12 AWG).

4. Low Voltage Sensor Wiring Cable: Minimum size 0.4 mm2 (#22 AWG).

C. Insulation:

1. 600 Volt Insulation Types:

a. Type THHN/THWN

b. Color Coding:

1) Feeder and Branch Circuits:

Voltage	Phase A	Phase B	Phase C	Neutral	Ground
208/120	Black	Red	Blue	White	Green
480/277	Brown	Yellow	Purple	White	Green

2) All Other Conductors (Unless otherwise noted):

(a) Ground Wire: White

(b) Ungrounded Wire: Black

(c) Power distribution system phase conductors 6 mm2 (#10 AWG) and smaller and neutrals 35 mm2 (#2 AWG) and smaller: Continuously colored wire insulation.

(d) Power distribution system phase conductors 10 mm2 (#8 AWG) and larger and neutrals 50 mm2 (#1 AWG) and larger: Continuously colored wire insulation or application of a half-lapped layer of Scotch #35 colored vinyl adhesive tape for a minimum of 65 mm (2-1/2 inches) of continuous wire length at each end of each length of each wire, and at each junction box, conduit fitting, and/or other electrical enclosure. The wire insulation itself shall be black.

2. Below 600 Volt insulation types and color coding: As noted in Contract Documents. Class 2 plenum rated, multi-conductor, NEC type CL2P, CMP, or MPP required for all open wiring installations.

D. Accessories:

1. Tags:

a. Flameproof linen or fiber in accessible locations.

b. Feeders: Indicate number, size, phase, points of origin, and terminations. Control or alarm: Indicate type of controls or alarm points of origin and terminations.

2. Terminations, Splices, and Taps:

a. Copper Conductors 6 m2 (#10 AWG) and Smaller: Compression type or twist-on spring loaded connectors and nylon insulated covering.

b. Copper Conductors 10 mm2 (#8 AWG) and Larger: Mechanical bolted pressure or hydraulic compression type.

c. Cable Lugs and Connectors: Compression type of same material as conductor with marking indicating size and type.

d. For copper lug connections to bus bars provide anti-seize compound.

E. Manufacturer: General Cable, Anaconda, Cyprus, or equal.

PART 3 EXECUTION

3.01 INSTALLATION OF 600 VOLT WIRE AND BELOW

A. All wire shall be installed in conduit unless otherwise noted in the Contract Documents or by prior written approval of the SDR.

B. 600 Volt Wire and Other Conductors:

1. No open wiring permitted.

2. Not more than three circuits in one conduit.

3. An equipment grounding conductor shall be required for all circuits.

4. Separate neutral conductors shall be required for each branch circuit feeding general purpose convenience outlets.

5. Pull no thermoplastic wires at temperatures lower than 0°C (32°F).

6. Prior to installation of cables, thoroughly clean and wipe dry all conduit and wireways before pulling any wires. Use "Ideal 77, Yellow", or "Minerallac #100" pull-in compound.

7. Use separate raceways for conductors of 120/208 and 277/480 Volt systems, except 480 Volt motor branch circuit wiring and related 120 Volt control wiring. Separate raceways for emergency or stand-by system conductors.

C. Open Wiring Installations:

1. Run cables in concealed plenum spaces above suspended ceiling without raceway. Neatly bundle and run cables together wherever possible.

2. Attach cables to existing raceway supports and / or ceiling grid wires at intervals not to exceed 1500 mm (5 feet).

3. Keep cables a minimum of 600 mm (24 inches) above the suspended ceiling.

END OF SECTION

SECTION 16130

RACEWAYS, BOXES, AND FITTINGS

PART 1 GENERAL

1.01 DESCRIPTION

A. Work included in this section: Materials, equipment fabrication, and installation for the following:

1. Miscellaneous Steel Work and Equipment Supports
2. Raceways, Boxes, and Fittings

1.02 MISCELLANEOUS STEEL WORK AND EQUIPMENT SUPPORTS

A. Furnish and install all miscellaneous structural members as required to support and install all electrical equipment.

B. Design, fabrication, and erection of structural steel members be in accordance with requirements of the American Institute of Steel Construction, "Specification for the Design, Fabrication, and Erection of Structural Steel for Buildings".

C. Materials for steel sections in accordance with Section 1.4 of the American Institute of Steel Construction "Specification for Design, Fabrication, and Erection of Structural Steel for Buildings". All steel shall be Type A36.

D. All steel work shall be thoroughly cleaned and all loose mill scale, rust and foreign matter removed. It shall be primed with a rust-inhibitive paint. Primer shall be red lead pigmented primer TT-P-86 Type III. Apply second or finish coat of light grey semi-gloss alkyd enamel TT-E-529 Class A.

PART 2 PRODUCTS

2.01 RACEWAYS

A. Raceways: Complete with boxes, fittings, and accessories.

1. Rigid Steel Conduit (RSC): Full weight pipe, galvanized, threaded. PVC coating required for all locations in contact with earth.

2. Intermediate Metallic Conduit (IMC): Lightweight steel pipe, galvanized, threaded. Minimum 20 mm (3/4 inch) shall be used below grade, in slab.

3. Electrical Metallic Tubing (EMT): Thin wall pipe, galvanized, threadless.

4. Flexible Metal Conduit: Continuous single strip, galvanized, minimum diameter 15 mm (1/2 inch). Liquidtight required for all watertight installations. No runs permitted over 3 m (6 feet) in length unless SDR approval is secured.

5. PVC Conduit: Minimum schedule 40 required for all direct buried installations. Minimum DB 120 required in all locations encased in concrete. Minimum 20 mm (3/4 inch) shall be used in all locations.

6. Wireways: Complete with all fittings and accessories. Size as noted, baked enamel finish, inside and out, approved for support at minimum of 3 m (10 feet) on centers.

    a. Interior Use: Hinged cover and base, minimum thickness 1.5 mm (16 gage) galvanized steel.

    b. Exterior Use: Hinged cover and base, minimum thickness 1.9 mm (14 gage) galvanized steel, weatherproof and gasketed.

    c. Acceptable Manufacturer: Hoffman Engineering Co., Square D. Co., equivalent .

7. Surfaceduct: Complete with all fittings and accessories. Single duct configuration with devices as shown on Contract Drawings. Acceptable manufacturer: Walkermold Series 1700 Surfaceduct or equivalent.

B. Fittings and Accessories:

1. Raceway Fittings:

    a. Galvanized steel or malleable iron.

    b. RSC or IMC Conduit: Non-split, threaded.

    c. EMT: Compression type throughout. Set screw not permitted.

    d. Flexible Metal Conduit: Angle wedge type with insulated throat.

    e. Bushings and Connectors: Metallic with insulated throat. Use liquid tight with sealing ring and insulated throat for weatherproof or dustight installations.

    f. Expansion and Deflection Fittings: O.Z./Gedney Type DX.

2. Sleeves:

    a. Exterior Non-membrane Waterproofed Walls: Galvanized cast iron, galvanized steel, or wrought iron with continuously welded center flange.

    b. Membrane Waterproof Walls, Floors, and Roofs: O.Z. Type WSKA.

    c. Exterior Non-membrane Waterproof Roofs: Galvanized cast iron flashing flange and clamping ring.

    d. Interior Membrane Waterproof Floors: Galvanized cast iron flashing flange and clamping ring. Extend 50 mm (2 inches) above floor with pipe nipples. Clamp to flashing. Josam 26420 Series or O.Z. Type WSL, FSK.

    e. Extend flashing 250 mm (10 inches) around edge of raceway.

3. Seals and Expansion Fittings:

    a. Seals:

        1) Raceway in Waterproof Sleeves: O.Z. Type WSK through-wall seal.

        2) Raceways in Non-watertight Sleeves: Sealing compound.

        3) Thruwall Cable Seals: O.Z. Type WSCS.

    b. Expansion Fittings:

        1) Exposed and in Furred Spaces: Flexible conduit with external bonding jumper strap.

    c. Cables in Raceways Through Sleeves: O.Z. Type KSC compound.

4. Acceptable Manufacturer for Fittings and Accessories: T&B/Thomas and Betts, Midland-Ross Corp., O.Z./Gedney, or equal.

C. Boxes:

1. Outlet Boxes:

    a. Stamped steel, 100 mm (4 inches), square or octagon for lighting fixtures; 30 mm (1-1/2 inch) deep above ceiling, 75 mm (3 inch) deep in slab, and 54 mm (2-1/8 inch) deep in wall.

b. In wall for receptacles or switches, 100 mm (4 inch) square 54 mm (2-1/8 inch) deep with raised covers and fixture studs where required. Through-the-wall type not permitted.

c. Galvanized Cast Iron or Aluminum with Threaded Hubs: 100 mm (4 inch) round, 50 mm (2 inch) deep on ceiling, and 100 mm (4 inch) square, 50 mm (2 inch) deep on wall.

d. Boxes for Outdoors and Damp Locations: Weatherproof.

e. Boxes Without Fixture or Device: Provide with blank cover.

f. Offset back-to-back outlets with a minimum of 300 mm (12 inch) separation.

2. Junction and Pull Boxes:

a. Galvanized sheet steel. Code size and thickness in accordance with voltage parameters. Screw-on covers. Insulated cable supports.

b. Outdoor and Damp Locations: Galvanized or cast iron or aluminum with threaded hubs and gaskets.

c. Provide barriers between wiring energized from different systems: 120/208, 277/480 volt wiring, and emergency and normal wiring.

3. Floor Boxes: Galvanized cast iron with brass covers and flanges, suitable for conduit and devices indicated. Acceptable manufacturer: Harvey Hubbell Dualevel Series or equivalent.

4. Floor Monuments: Satin finish, diecast aluminum, low potential service fitting, suitable for devices indicated. Acceptable manufacturer: Walkerduct Series 500 Service Fittings or equivalent.

PART 3 EXECUTION

3.01 INSTALLATION OF RACEWAYS

A. Procedure:

1. All conduit joints shall be cut square, threaded when necessary, reamed smooth, and drawn up tight. All threaded joints shall be coated with graphite base joint compound to assure ground continuity. Bends or offsets shall be

made with an approved bender, hickey, or hub-type conduit fittings. Number of bends per run shall conform to code limitations.

2. Conduits shall be secured to all boxes with locknuts and bushings in such a manner that each system shall be electrically continuous throughout.

3. Conduits shall be securely fastened in place on maximum 3 m (10 foot) intervals. Hangers, supports, or fastenings shall be provided at each elbow and at the end of each straight run terminating at a box or cabinet.

4. Furnish and install pullboxes where required by code and where necessary in the raceway system to facilitate conductor installation. In general, conduit runs of more than 30 m (100 feet), or with more than three right-angle bends shall have a pullbox installed at a convenient intermediate location. Support boxes independently of raceways, walls, and partitions.

B. Supports shall be as follows:

1. Ceiling trapeze, strap hangers, or wall brackets.

2. U-bolt or pipe straps at each grating level of riser raceways.

3. Raceways shall be secured to support with pipe straps or U-bolts.

4. Supports shall be mounted to structure with:

a. Toggle bolts on hollow masonry .

b. Expansion shields or inserts on concrete.

c. Machine screws on metal.

C. Clearance from Water, Steam, or Other Piping: Minimum 75 mm (3 inch) separation from hot water pipes, except 100 mm (4 inches) from pipe cover at crossings.

D. Keep raceways clear of motor foundations and underside of boilers.

E. Raceways for suspended ceilings shall be run above ceilings. Do not attach any component to ceiling hanger wire or install conduit less than 300 mm (12 inches) from the ceiling without prior written permission from the SDR.

F. Empty or Spare Raceways Over 3 m (10 feet) Long: Provide with 4 mm2 (#12 AWG) pull-wire.

G. Fire Sealants:

1. Fire rated approved type sealant equivalent to the rating of the barrier being penetrated.

2. Provide for raceways and wire passing through slots, sleeves, or openings in fire partitioned areas. Add fire barriers tight to the conductors from transformer vaults and network protector compartments.

3. Seal all unused penetrations.

H. Rigid Steel Conduit:

1. In slabs, maximum outside diameter not to exceed 1/3 of the slab thickness.

2. Minimum 25 mm (1 inch) cover of concrete fill.

I. Intermediate Metallic Conduit:

1. Same as rigid steel conduit and, do not use in hazardous location or direct burial.

J. EMT: Install generally for interior.

K. Flexible and Liquidtight Metal Conduit:

1. From outlet box to recessed lighting fixture a maximum length of 2 m (6 feet) is permitted.

2. For final connection to motor terminal box and transformers. Maximum permitted length is 450 mm (18 inches) with minimum of 20% slack.

L. PVC Conduit:

1. Convert to steel conduit when entering building or exiting ground with approved adaptors.

2. Convert to steel conduit for all bends and offsets with approved adapters.

3. Clearance from Hot Water Lines and Steam Lines: 1 m (3 feet).

4. General interior and exposed use is not permitted.

M. Outlet Boxes:

1. Set square and true with building finish and secure to building structure.

2. Provide barriers between switches connected to different phases for voltages exceeding 150 Volts to ground.

N. Panel, Junction, and Pullboxes:

1. Location: Clear of other work. Conceal junction and pullboxes in finished spaces and maintain accessibility.

2. Outlet Boxes for Fixtures Recessed in Suspended Ceiling: Accessible through opening created by removal of adjacent ceiling tile.

END OF SECTION

SECTION 16140

WIRING DEVICES

PART 1 GENERAL

1.01 DESCRIPTION

A. Work included in this section: Materials, equipment, fabrication, installation, and testing for the following:

1. Disconnect Switches
2. Wall Switches
3. Receptacles

PART 2 PRODUCTS

2.01 DISCONNECT SWITCHES

A. Disconnect Switches:

1. Non-fused.

2. Voltage as required.

3. Heavy-duty, quick-make, quick-break, load rated.

4. Horsepower rated for motor loads.

5. Lockable in the off position.

6. Toggle type switches as follows:

a. Non-fused, load break.

b. Maximum Ratings: 20 Amps at 600 Volts and 30 Amps at 240 Volts.

c. Manufacturer:

1) Two Pole: Hart and Hegman No. 6808 or equal.

2) Three Pole: Hart and Hegman No. 7810 or equal.

2.02 WALL SWITCHES

A. Local Wall Switches:

1. General use snap switch.
2. Nylon toggle.
3. Stainless steel ground clip with grounding screw.
4. Back and side wiring.
5. 20 Amp, 120/277 Volt, AC.
6. Devices shall meet the following listings and certifications:
    a. Verified under Federal Spec. #WS-896-E
    b. NRTL Listed
    c. NEMA WD-1
7. Nylon wall plate.
8. Coordinate device and wall plate color with finish specifications.

2.03 RECEPTACLES

A. Duplex:
1. Nylon face.
2. One piece backstrap.
3. Back and side wiring.
4. Devices shall meet the following listings and certifications:
    a. Verified under Federal Spec. WC-596-F
    b. NRTL Listed
    c. Comply with NEMA WD-1
5. Nylon wall plate.
6. Coordinate device and wall plate color with finish specifications.

B. GFCI Duplex:
1. Nylon face.

2. One piece backstrap.
3. Feed-thru capability.
4. Devices shall meet the following listings and certifications:
    a. Verified under Federal Spec. WC-596
    b. NRTL Listed
    c. Comply with NEMA WD-1
5. Nylon wall plate.
6. Coordinate device and wall plate color with finish specifications.

C. Straight Blade Devices:
1. High impact resistant face.
2. Screw type pressure terminals.
3. Devices shall meet the following listings and certifications:
    a. NRTL Listed
    b. Comply with NEMA WD-1
4. Stainless steel wall plate.
5. Coordinate device color with finish specifications.

D. Locking Devices:
1. High impact resistant face.
2. Back wiring.
3. Screw type pressure terminals.
4. Devices shall meet the following listings and certifications:
    a. NRTL Listed
    b. Comply with NEMA WD-1

5. Stainless steel wall plate.

6. Coordinate device color with finish specifications.

E. Designators:

Drawing Designation	Receptacle Type	Nema Configuration	
		208V	480V
Duplex	3W, 20A	5-20R	N/A
Double Duplex	3W, 20A	5-20R	N/A
GFCI Duplex	3W, 20A	5-20R	N/A
3/20	3W, 20A	L5-20R	L8-20R
3/30	3W, 30A	L5-30R	L8-30R
4/20	4W, 20A	L14-20R	L16-20R
4/30	4W, 30A	L14-30R	L16-30R
5/20	5W, 20A	L21-20R	L22-20R
5/30	5W, 30A	L21-30R	L22-30R
3/50	3W, 50A	5-50R	N/A
4/50	4W, 50A	14-50R	N/A
4/50X	4W, 50A **	15-50R	N/A

**No Neutral

E. Pin & Sleeve Receptacles

1. Heavy duty pin & sleeve type.

2. Water tight.

3. Voltage, amperage and wire number as specified.

4. Fifteen degree angle back box.

5. Acceptable Manufacturer : Hubbel or equal.

PART 3 EXECUTION

3.01 GENERAL

A. Duplex receptacles shall be installed with the ground pin up.

B. Wall switches shall be installed and wired such that the equipment being controlled is off when in the switch is in the down position.

3.02 FIELD TESTS AND START-UP

A. All wiring shall be tested for proper operation and correct switching control of apparatus involved.

END OF SECTION

SECTION 16150

MOTORS AND MOTOR CONTROLLERS

PART 1 GENERAL

1.01 DESCRIPTION

A. Work included in this section: Materials, equipment, fabrication, installation, and testing for the following:

1. Motors
2. Motor Controllers

PART 2 PRODUCTS

2.01 MOTORS

A. Exact motor specifications, will normally be given under Division 15.

B. Motors shall be of sufficient size for the duty to be performed, and shall not exceed their full rated load when the driven equipment is operating at specified capacity under the most severe conditions.

2.02 MOTOR CONTROLLERS

A. Each motor shall be provided with overload protection, either integral with the motor or controller, or mounted in a separate enclosure.

B. Protective devices shall be the manually reset type; manual controllers shall be specifically designed for the purpose and rated in horsepower.

C. Size overloads after receipt of the equipment to be protected in accordance with nameplate data.

D. When automatic control devices such as thermostats, floats, pressure switches, etc. are used for motor control, they shall be designed for the purpose and horsepower rated.

E. When the automatic control device does not have such a rating, a magnetic starter shall be used with the automatic control device actuating the pilot control circuit.

F. Wire control circuits as shown on contract drawings.

G. All control wiring shall be 120 V

PART 3 EXECUTION

3.05 FIELD TESTS AND START-UP

A. All wiring shall be tested for proper operation and correct switching control of apparatus involved. All motors shall be tested for proper rotation. Where rotation is found incorrect, reverse the connections at the motor to reverse the rotation.

END OF SECTION

SECTION 16151

ELECTRICALLY OPERATED STEEL DOORS

PART 1 GENERAL

1.01 DESCRIPTION

A. Work included in this section: Labor, equipment, supporting material, installation, and testing for the following:

1. Electrically Operated Steel Doors Control and Electrical Connection.

B. Work Not Included in this Section:

1. Material as specified by door manufacturer, excluding wiring.

PART 2 PRODUCTS

2.01 ELECTRICAL OPERATOR

A. The electric operators shall be R.C. Mahon Co., Type 935-P or equal as provided by manufacturer. Door motors shall be 480 Volt, 3 Phase and of standard drip proof construction. Power unit shall be self-locking and capable of holding the door in any position in the case of failure of the counter-balancing spring. Electrical controls shall include the following: Reversing, across-the-line type magnetic starter with overload relays, solenoid brake, interlock switch, limit switches, and three button "OPEN", "CLOSE", and "STOP" push-button control station.

2.02 MAGNETIC STARTER

A. The magnetic starter shall have three integral overload relays to open the grounded 120 Volt control circuit when any one of the three overload relays open on excessive motor current. These overload relays are to be located in the reversing starter housing, and shall be manufactured by the starter manufacturer. The reversing motor starter shall be provided with interlocks to prevent the energizing of both the open and the close coils at the same time.

2.03 PUSH-BUTTONS

A. Push-buttons shall be of the heavy-duty, oil-tight, momentary-contact type, Square D, TypeTY-32, or equal.

2.04 LIMIT SWITCHES

A. The limit switches shall be an integral part of the drive mechanism, and shall stop the door at the top and bottom. This switching arrangement shall be equal to a Cutler-Hammer Rotating Cam Limit Switch, Type J, with two normally open and two normally closed contacts. A limit switch shall be provided on the manual throw-over lever to remove control power when the chain hoist is in use. Limit switches shall be provided at all deadbolts. These switches shall remove control power when the deadbolt is in the closed position.

PART 3 EXECUTION

3.01 FIELD TESTS AND START-UP

A. All wiring shall be tested for proper operation and correct switching control of apparatus involved.

END OF SECTION

SECTION 16160

CIRCUIT BREAKERS AND PANELBOARDS

PART 1 GENERAL

1.01 DESCRIPTION

A. Work included in this section: Materials, equipment, fabrication, installation, and testing for the following:

1. Circuit Breakers
2. Panelboards

B. Related Work in Other Sections:

1. Painting, Division No. 9.

PART 2 PRODUCTS

2.01 CIRCUIT BREAKERS

A. Molded Case:

1. Thermal-magnetic, 400 Amp frame and below: Solid-state, 600 Amp frame and above. Quick-make, quick-break for both types.

2. Manually operated with insulated trip free handle.

3. Provisions to attach a padlocking device in the open position.

4. Multi-pole Types: With internal trip bar.

5. Terminals: NRTL listed for 75° C, and suitable for copper or aluminum cable.

6. Auxiliary devices as indicated.

7. Enclosures: Dead front, NEMA type.

8. Frames, interchangeable trips, when applicable, and interrupting capacity not less than noted available symmetrical short circuit current.

9. Manufacturer 100A and Below: General Electric, Type TEY, no substitutions.

2.02 PANELBOARDS

A. Panelboards: Circuit breaker type, rating as noted.

1. Phase bus bars shall be hard drawn copper, minimum 98% conductivity silver or tin plated joints. Option for alloy aluminum with tensile strength of 138 MPa (20,000 psi), minimum 55% conductivity, silver or tin plate joints. All bus connecting straps shall be rated for maximum trip current, and shall be installed in all spaces within panel.

2. Neutral bus shall be rated at 200% of the phase bus maximum current rating.

3. Through-feed/subfeed main lugs as indicated.

4. Enclosures:

    a. Dead front, safety cabinets with:

        1) Galvanized sheet steel back box.

        2) Covers:

            a) Door in door construction. Lock required for inner door only. Both doors hinged.

        3) Self adjusting front alignment.

    b. Hardware:

        1) Self latching. Latch bolt retracted by lifting up on lever except when lower lever is locked down by key.

        2) Key removable in either locked or unlocked position.

        3) Corbin Vertical Lock #15767, no substitutions.

    c. Hinges:

        1) Concealed, five knuckle steel with non-ferrous pins.

        2) 180° opening.

        3) Locate maximum 650 mm (26 inch) on centers.

    d. Minimum Gutter Spaces:

        1) Lighting Panels: 150 mm (5-3/4 inch) sides, top and bottom.

        2) Power Panels: 400 Amp mains: 230 mm (9 inch) sides, 200 mm (8 inch) top and bottom.

e. Directory:

1) Permanent lexan circuit directory holder.

2) Typewritten list indicating feeder cable, circuit numbers, and outlets supplied and their locations. Blank panel schedules furnished by SNLL. Circuits shall be installed as indicated on contract drawings.

f. Permanent circuit numbering to be furnished by the panelboard manufacturer and field installed to match SNLL furnished panel schedules.

g. Enclosure shall be field painted to match adjacent walls.

5. Acceptable Manufacturer: G.E. "A" Series Type "AE", IEM, or equal.

PART 3 EXECUTION

3.01 FIELD TESTS AND START-UP

A. Circuit Breakers, Low Voltage Circuit Breakers:

1. Visual and Mechanical Inspection:

a. Inspect arc chutes and interphase barriers for cracking, burning, chipping, and misalignment.

b. Vacuum clean circuit breaker frame, insulators, and main copper details.

2. Perform contact resistance test.

3. Operate auxiliary protective devices to insure proper operation.

4. Follow manufacturer's recommendations for solid-state trip units.

a. Primary injection recommended to evaluate complete trip circuit operation.

b. Secondary injection can be used for evaluating the electronic portion of the trip unit.

5. Do not Megger solid-state devices.

6. Set circuit breakers to recommended settings.

END OF SECTION

SECTION 16460

GENERAL PURPOSE TRANSFORMERS

PART 1 GENERAL

1.01 DESCRIPTION

A. Work included in this section: Material, equipment, fabrication, installation, and testing for the following:

1. Low Voltage Transformers

PART 2 PRODUCTS

2.01 LOW VOLTAGE TRANSFORMERS

A. Dry-type Transformers:

1. 480 Volt delta primary, 120/208 Volts, wye secondary, 3 phase, 4 wire secondary, 60 Hertz.

2. KVA rating as noted.

3. Taps: six 2 1/2% taps, 2 above and 4 below nominal.

4. Sound levels shall not exceed 45 dB in general. Follow Nema TR-27 requirements..

5. Rigidly mounted terminals listed for 75° C wire.

6. 220° C insulation system for 115° C maximum temperature rise.

7. Manufacturers: Square D, G.E., or equal.

PART 3 EXECUTION

3.01 INSTALLATION OF TRANSFORMERS

A. Install transformer with mounting brackets mounted to structural steel members. Provide cross-bracing to satisfy Zone 4 seismic requirements for the State of California.

B. Install and locate per manufacturer's directions.

C. Provide adequate ventilation.

3.02 FIELD TESTS

A. Measure transformer secondary voltage. Change tap settings as required to provide correct voltages. Voltage levels shall be 115-125 Volts for the 120 Volt system and 470-490 Volts for the 480 Volt system.

END OF SECTION

SECTION 16461

SPECIAL PURPOSE TRANSFORMERS

PART 1 GENERAL

1.01 DESCRIPTION

A. Work included in this section: Material, equipment, fabrication, installation, and testing for the following:

1. K-Rated Transformers

PART 2 PRODUCTS

2.01 SPECIAL PURPOSE TRANSFORMERS

A. K-Rated Transformers:

1. 480 Volt delta primary, 120/208 Volts, wye secondary, 3 phase, 4 wire secondary, 60 Hertz, copper windings.

2. KVA rating as noted.

3. Transformers shall meet or exceed NEMA standard NEMA ST20 and be specifically designed, U.L. listed and labeled stating “Suitable for non-sinusoidal current loads”, with a K factor not to exceed a K rating of 13.

4. Sound levels shall not exceed 45 dB in general. Follow Nema TR-27 requirements.

5. The temperature rise at rated voltage and full load shall not exceed 115 degrees C with a 220 degrees C U.L. Component Recognized Insulation System.

6. The higher voltage winding shall have a quantity of (2) FCAN and (4) FCBN - 2.5% taps.

7. A copper electrostatic shield shall be inserted between the primary and secondary windings.

8. The secondary neutral terminal shall be twice the ampacity of the secondary phase terminals.

9. The Basic Impulse Level of all windings shall be 10KV.

10. The core flux density shall be well below the saturation point even with a 10% primary over voltage.

11. Transformer primary and secondary terminals shall be front connected.

12. Manufacturers: Square D, G.E., or equal.

PART 3 EXECUTION

3.01 INSTALLATION OF TRANSFORMERS

A. Install transformer with mounting brackets mounted to structural steel members. Provide cross-bracing to satisfy Zone 4 seismic requirements for the State of California.

B. Install and locate per manufacturer's directions.

C. Provide adequate ventilation per manufacturer’s directions.

3.02 FIELD TESTS

A. Measure transformer secondary voltage. Change tap settings as required to provide correct voltages. Voltage levels shall be 115-125 Volts for the 120 Volt system and 470-490 Volts for the 480 Volt system.

END OF SECTION

SECTION 16490

AUTOMATIC TRANSFER SWITCH

PART 1 GENERAL

1.01 DESCRIPTION

A. Work included in this section: Materials, equipment, fabrication, installation, and tests for the following:

1. Automatic Transfer Switch

PART 2 PRODUCTS

2.01 AUTOMATIC TRANSFER SWITCH

A. Manufacturer: Automatic Switch Co. or equal.

B. Rating: 480 Volts, Amperage as noted in Contract Documents, 3-pole, 4-wire, overlapping neutral, NEMA 1 surface mount.

C. Applicable Standards: NRTL listed, NEMA Standard 1CS1-447 and 1CS1-109, ANSI C37.90a.

D. The automatic transfer switch control panel shall utilize solid-state sensing on normal and emergency sources for automatic, positive operations.

E. The automatic transfer switch shall have operating characteristics as indicated below:

1. The normal source voltage across live lines shall be monitored. Close differential voltage sensing shall be provided. Pickup voltage shall be adjustable from 85% to 100% of minimal and the dropout voltage shall be adjustable from 75% to 98% of the pickup value. The transfer to the alternate source shall be initiated upon reduction of the normal source to 85% of nominal voltage and retransfer to the normal source shall occur when the normal source restores to 95% of nominal.

2. A time delay to override momentary normal source outages to delay all transfer switch signals. The time delay shall be field adjustable from 0.5 to 6 seconds and factory set at 1.0 seconds.

3. A time delay on retransfer to the normal source. The time delay shall be automatically bypassed if the alternate source fails and the normal source is available. The time delay shall be field adjustable from 0 to 30 minutes and factory set at 30 minutes.

4. A time delay on transfer to the alternate source for controlled timing of load transfer. The time delay shall be field adjustable from 0 to 5 minutes and factory set at 0.

5. Independent voltage and frequency sensing of the alternate source. Pickup voltage shall be adjustable from 85% to 100% of nominal. Pickup frequency shall be adjustable from 90% to 100% of nominal. Transfer to the alternate source shall occur upon normal source failure when emergency source voltage is 90% or more of nominal and frequency is 95% or more of nominal.

6. A white signal light to indicate when the automatic transfer switch is connected to the normal source. A yellow signal light to indicate when the automatic transfer switch is connected to the alternate source.

7. Form 'C' auxiliary contact that is operated when the automatic transfer switch is connected to the normal source and one Form 'C' auxiliary contact that is operated when the automatic transfer switch is connected to the alternate source. Rated 10 Amps, 240 Volts, 60 Hz.

8. A test switch to momentarily simulate normal source failure.

F. Harnessing between the transfer switch and the control panel shall have a built-in disconnect for routine maintenance.

G. An automatic transfer switch utilizing components of molded case circuit breakers, contactors, or parts thereof which have not been intended or rated for continuous duty or repetitive load transfer is not acceptable.

PART 3 EXECUTION

3.01 INSTALLATION

A. The automatic transfer switch shall be wall mounted as indicated on the Contract Documents.

B. Install switch mounting brackets mounted to structural steel members. Provide cross-bracing to satisfy Zone 4 seismic requirements for the State of California.

C. Provide switches with nameplates identifying the source of the normal and emergency circuits.

3.02 ACCEPTANCE TESTS

A. The Contractor shall submit certification stating that the switch has been installed in accordance with the manufacturer's recommendations.

END OF SECTION

SECTION 16500

GENERAL PURPOSE LIGHTING

PART 1 GENERAL

1.01 DESCRIPTION

A. Work Included in This Section: Materials, equipment, fabrication, retrofit, installation, and testing for the following:

1. Fixtures
2. Power Hook Fixture Hangers
3. Lampholders
4. Ballasts
5. Wiring
6. Fluorescent Lamps
7. Exit Signs
8. Occupancy Sensors

PART 2 PRODUCTS

2.01 GENERAL

A. Electronic Ballasts: 120 or 277 V as required.

B. T8 Lamps.

C. Metal Halide Fixtures.

D. Passive Infrared Occupancy Sensors: 120 or 277 V, as required.

E. LED Exit Signs: 120/277 V.

2.02 FIXTURES

A. Fluorescent Fixture:

1. Fixture shall conform to NRTL standards.

2. Optical assembly shall be enclosed, gasketed, and locked to the ballast housing by a positive, vibration–proof means.

3. Optical assembly filter to permit the passage of air during heating and cooling cycles.

4. Pre–wired.

B. Metal Halide Fixture:

1. Energy saving electronic ballast.

2. Reflector shall be prismatic borosilicate glass with zinc plated polyester powder coated wire frame with 10% uplight.

3. Mogul base glassed porcelain lampholder, adjustable for varying the spacing–to–mounting–height ratio in the field.

4. Separate, removable mounting components that can be easily removed and assembled to the structural or mounting hardware before mounting the remainder of the fixture.

5. Quartz standby light as shown.

6. Manufacturer: Conservalite Technologies, Lumark, or equal.

C. Painted Surfaces:

1. Synthetic enamel, with acrylic, alkyd, epoxy, polyester, or polyurethane base, light stabilized, baked on at 175° C (350° F) minimum, catalytically or photometrically polymerized after application.

2. White Finishes: Minimum of 85% reflectance.

3. Metal Parts: Cleaned and treated with phosphate or chromate bonding process after fabrication.

D. Unpainted Aluminum Surfaces:

1. Satin anodized.

2.03 POWER HOOK FIXTURE HANGERS

A. Provide for each HID fixture, one power hook fixture hanger complete with the following accessories:

1. Feed through hubs and top hub for pendant mounting.

2. Cast mounting lugs.

3. Locking plug and receptacle.

4. Loop assembly with SO power cord with safety retention device.

5. Manufacturer: Crouse–Hinds or equal.

2.04 LAMPHOLDERS

A. Fluorescent:

1. White urea plastic body.

2. Contacts: Silver–plated phosphor bronze or beryllium copper. For U lamps: Slotted slide–in contacts, Leviton No. 13080 or equal; bi–pin compressible not acceptable.

2.05 BALLASTS

A. General:

1. High performance designed to be the optimum combination for energy efficiency, power line quality, and lighting system performance.
2. Solid state circuitry.
3. Energy saving.
4. High power factor.
5. Required voltage and frequency.
6. No detectable PCB's.
7. NRTL listed.

B. Fluorescent:

1. Solid state circuitry, high performance, energy saving, full light output type compatible with energy saving F32T8 lamps.

2. Instant start with parallel lamp operation. Any lamp shall be capable of removal with no noticeable degradation of light output from the other lamp(s).

3. Ballast factor of .875 minimum.

4. Power factor of 95% minimum.

5. Lamp current crest factor of 1.7 or less.

6. Total harmonic distortion less than 20%.

7. Operate lamps at a frequency of 20 kHz or higher with less than 2% lamp flicker.

8. Suitable to operate indoors in heated and / or air conditioned spaces at 10° C (50° F) to 40° C (105° F) ambient.

9. Operate at an input voltage of 108 to 132 VAC (120 V line) or 249 to 305 VAC (277 V line) at an input frequency of 60 Hz. Light output shall remain constant for a line voltage fluctuation of plus or minus 5%.

10. Meet FCC standard for EMI/RFI (FCC Part 18, 15J).

11. Meet all applicable ANSI and IEEE standards regarding harmonic distortion and transient protection such as IEEE 587 and ANSI C62.41.

12. Warranty: 5 year replacement including labor.

13. Manufacturer:

    a. Standard ballasts shall be Osram/Sylvania, MagneTek/Triad, or equal.

    b. Dimming ballasts shall be Lutron Hi-lume or equal.

C. Emergency:

1. Consist of nickel cadmium battery, charger, electronic circuitry, readily accessible and visible test button, and charge indicating light.

2. Operate one lamp for a minimum of ninety (90) minutes when no utility power is available.

3. Compatible with electronic, standard, energy saving, and dimming AC ballasts.

4. Meet or exceed the emergency illumination requirements of the National Electrical Code, Life Safety Code and be U.L. listed for the purpose.

5. Warranty: 5 year repair or replacement

6. Manufacturer: Bodine or equal.

D. High Intensity Discharge:

1. 400 Watt metal halide per ANSI M59.

2. Energy saving electronic HID.

3. Suitable to operate in indoor heated and / or air conditioned spaces at 10° C (50° F) to 40° C (105° F) ambient.

4. Power factor not less than 90%.

5. Ballast factor not less than 1.2.

6. Operate at a frequency of 20kHz or higher.

7. Less than 20% total harmonic distortion.

8. Continuously dimmable with industry standard 0–10 V controls.

2.06 WIRING

A. 120/208 Volt Luminaire Wiring: 300 Volt, 150° C (300° F). Type AF (indoor, dry locations only), Type SF–1 or SFF–1, beginning at separately mounted outlet box.

B. 277/480 Volt Luminaire Wiring: 600 Volt, 150° C (300° F). Type SF–2 or SFF–2, beginning at each separately mounted outlet box.

C. Occupancy Sensor Wiring: Follow manufacturer's recommendations for quantity and size.

2.07 FLUORESCENT LAMPS

A. Type: T8, 75 CRI, F032/735, FB032/735/6 (U–shape).

B. Length: 1200 mm (48 inches) straight or 570 mm (22-1/2 inches) U–shape with 150 mm (6 inches) spacing.

C. Color temperature: 3500 K.

D. Average life: 15,000 hours on instant start ballasts with three hours per start.

E. Base: Medium, Bi–Pin.

F. Ballast type: Electronic instant start.

G. Non-cathode gaurded.

H. For use on North American 60 hertz systems.

I. Thermoplastic yellow sleeves with fail safe end caps assuring snug fit between lamp and sleeve.

J. Warranty: Two year replacement.

K. Lamp Manufacturer: Osram/Sylvania or equal.

2.08 EXIT SIGNS

A. Lettering: Red Light Emitting Diode (LED) light source with black silk screen background.

B. Mount: Universal.

C. Arrows: Chevron style, universal, with reusable arrow covers.

D. Voltage: 120/277 Volts (dual voltage), 60 Hz.

E. Housing: White metal case with white face plate and polycarbonate shield.

E. NRTL listed, meet NFPA Life Safety Code 101, NEC, OSHA and ADA requirements.

F. Double faced if so indicated.

G. Built in sealed, lead calcium battery, 90 minute operation, LED AC / charge indicators, automatic battery diagnostics meeting NFPA 101 testing requirements.

H. Warranty: 20 year sign warranty, 5 year battery warranty.

I. Manufacturer: Exitronix Exitron series, Trace Lite Executive series, or equal.

2.09 OCCUPANCY SENSORS

A. General:

1. Passive infrared type.

2. Compatible with instant start, rapid start, electronic or magnetic fluorescent ballasts.

3. NRTL listed.

4. 120 or 277 V as required.

5. Load rating of 0-800 W at 120 V and 0-1200 W at 277 V.

6. Zero crossing circuitry to switch load on at zero voltage.

7. Adjustable time delay and sensitivity.

8. LED motion indicators.

9. Warranty: 5 year replacement.

10. Manufacturer: Watt–Stopper or equal.

B. Wall Switch Type Sensors:

1. Wall mounted (in place of wall switch), built-in light level sensor, manual or automatic operation.

2. 180 degree, up to a maximum 80 m2 (900 square feet).

3. Coordinate device and wall plate color with finish specifications.

C. Small Area Sensor:

1. Wall or ceiling mounted with appropriate attachment brackets. For use with power pack.

2. Directional, up to a maximum 30 m2 (300 square feet).

D. Large Area Sensor:

1. Wall or ceiling mounted with appropriate attachment brackets. For use with power pack.

2. Variable coverage patterns, up to a maximum 140 m2 (1500 square feet).

E. Ceiling Sensor (360°):

1. Ceiling mounted. For use with power pack.

2. Coverage: 360° coverage, up to a maximum 100 m2 (1200 square feet).

F. Power and Slave Packs:

1. Self–contained transformer relay system for use with remote mounted occupancy sensors.

2. Secondary output of 24 VDC for occupancy sensors supplied by power pack.

G. Digital Time Switch:

1. Wall mounted (in place of a wall switch).

2. Digital, no twist timer.

3. Adjustable, 5 minute to 12 hour range. Time scrolling options for overriding the preset time. One minute flash warning prior to time-out.

4. Coordinate device and wall plate color with finish specifications.

PART 3 EXECUTION

3.01 QUALITY ASSURANCE

A. Qualifications:

1. Manufacturing company shall have experience in manufacturing all products with a minimum of five years documented product development, testing, and manufacturing experience.

2. The installer shall have a minimum five years documented experience performing this type of work.

3. The installer shall have a complete sales, installation, and service operation.

4. The installer must be licensed C–10 (Electrical).

3.02 INSTALLATION OF LIGHTING FIXTURES

A. Provide approved fire rated coverings for lighting fixtures recessed in fire rated ceilings.

B. All fixtures shall be braced to satisfy Zone 4 seismic requirements.

C. Provide fixtures and / or fixture outlet boxes with hangers to properly support fixture weight and satisfy Zone 4 seismic requirements for the State of California.

D. Install flush mounted fixtures properly to eliminate light leakage between fixture frame and finished surface.

E. Provide plaster frames for recessed fixtures installed in other than suspended ceiling grid type acoustical ceiling systems. Brace frames temporarily to prevent distortion during handling.

F. Support surface mounted fixtures greater than 600 mm (2 feet) in length at a point in addition to the outlet box fixture stud.

3.03 INSTALLATION OF OCCUPANCY SENSOR CONTROLS

A. Install system in accordance with manufacturer's instructions.

B. Occupancy Sensors:

1. Occupancy sensors shall be furnished for each room specified in sufficient quantity and installed in such locations so as to provide 100% coverage in the

room. In large areas requiring multiple sensors, occupancy sensors shall be installed in sufficient numbers and in such locations as to provide overlap between zones of coverage of individual sensors, thereby insuring positive indication of occupancy in all portions of each lighting area.

2. Occupancy sensors shall be ceiling or wall mounted on swivel brackets at ceiling height, and incorporate selective aperture attenuation and adjustments as required to prevent spurious lighting initiations due to motion in adjacent areas.

3. All occupancy sensors shall be securely fastened in place, in a location that does not obstruct access to equipment, and which makes the sensors accessible for calibration and service. Sensors shall be attached with removable screw fasteners to facilitate replacement.

4. The time delay–before–off adjustment shall be set for fifteen (15) minutes and motion sensitivity adjustment shall be set at the middle of the range.

5. Under no circumstances shall any emergency or egress lighting be controlled by the occupancy sensing controls. All circuits on emergency (generator or battery backed-up) power shall be considered as egress or emergency lighting.

6. Provide power and slave packs as required to provide for circuit switching in the area of coverage and additional power packs as required to power the sensors.

7. Power and slave packs shall be installed in approved electrical enclosures such as junction boxes or relay cabinets. They shall be totally enclosed in all cases. Exposed power and slave packs are not permitted.

C. Field Wiring:

1. Furnish and install all necessary wire, conduit, pull boxes, connection boxes, fittings, and other materials as required to provide an automatic lighting control system in accordance with the Contract Documents and the manufacturer's installation instructions and recommendations.

2. Where the occupancy sensor is shown to be used in conjunction with a manual wall switch, the input power to the occupancy sensor power pack shall be derived from the unswitched leg.

D. Location:

1. The Contract Documents show approximate quantities and locations of occupancy sensors. Final locations shall be made based upon manufacturer's recommendation and space layout. Provide additional occupancy sensors where required to obtain control as specified.

2. All sensor installations shall be subject to the SDR's prior written approval as to location, mounting, and wiring.

E. Operation:

1. Occupancy sensors shall initiate lighting operation in an area upon entry of one or more persons, and shall maintain uninterrupted operation throughout the period that the area is occupied. In open areas, or areas with less than full height partitions, occupancy of any portion of the area shall initiate operation of the lighting throughout the area, except where specifically directed otherwise.

2. When an area is vacated the lighting shall remain in operation for the adjustable time delay period.

3. The occupancy sensor coverage and sensitivity shall be adjusted so that an occupant in any portion of a controlled room moving a hand in any plane at approximately 300 mm (1 foot) per second will trigger at least one occupancy sensor.

3.04 EXTRA MATERIALS

A. Provide as spare parts five (5) of each type and model of sensor and power pack, electronic ballasts, exit signs, and cases of T8 lamps.

3.05 TESTING

A. The Contractor shall provide all labor and equipment necessary to perform a comprehensive proof–of–function test for each occupancy sensor prior to acceptance by Sandia. Contractor's test shall include, but not be limited to, proof of function, area coverage, sensitivity setting, and time delay setting tests for each occupancy sensor.

B. Where device(s) or system(s) fail tests, the Contractor shall, at no additional cost to Sandia, make all necessary corrections and repairs and then repeat the entire test.

END OF SECTION

SECTION 16710

FIRE ALARM AND DETECTION SYSTEM (MXL SYSTEM)

PART 1 GENERAL

1.01 DESCRIPTION

A. The entire building fire alarm system shall include: Total Flood Clean Agent Fire Suppression System (15534), Fire Alarm and Detection System (16710), and the High Sensitivity Smoke Detection System, HSSD (16710) and will all be coordinated to operate as described in their respective sections. The HSSD system outputs shall interface directly to the Total Flood Clean Agent Fire Suppression System (15534). The Total Flood Clean Agent Fire Suppression System (15534) will then report to the Fire Alarm and Detection system. –Refer to the16710, 1.01, E for additional interfacing requirements.

B. The design and installation of the fire alarm and detection systems shall be complete with all necessary accessories and interfacing components for proper operation. System design and installation shall reflect high quality professional work that properly accounts for practical maintenance concerns and aesthetic concerns. The design shall be accomplished by a California registered Fire Protection Engineer or a NICET Level IV Qualified Technician in fire alarms. The installation shall be performed by a licensed Contractor regularly engaged in this type of work, supervised by a NICET Level II Qualified Technician in fire alarms, and in accordance with requirements of the National Fire Protection Association standards (NFPA), Department of Energy (DOE), and Sandia National Laboratories (SNL). All drawings shall be sealed by a state of California Registered Fire Protection Engineer, or signed by a NICET Level IV Qualified Technician in fire alarms.

~~C.~~ The system shall be an analog addressable type to include manual pull stations, automatic detectors, audible / visual indicating devices, equipment and connections for remote CXL monitoring, sprinkler flow, tamper, and PIV monitoring, magnetic door hold devices, duct mounted detectors, power supplies, air handling control, standby batteries, conduit, wire, and all other appurtenances required to provide a complete and operational system.

D. In addition to the requirements of this section and the related sections listed below, the Contractor shall be required to design the audible/visual system and the smoke detection system in accordance with the criteria listed in NFPA 72 and the Americans with Disabilities Act, and as indicated below.

1. Manual Fire Alarm Station – Manual Fire Alarm Station shall be located within 5-ft. of each building exit and each exit from each floor. Additional pull boxes shall be located as needed so that travel distance to a pull box never exceeds 200-ft.

2. Audible Notification Devices – Audible notification devices will include audible bells complying with NFPA 72 located throughout all areas of the facility including the roof. These devices will be located such that the sound produced

from the alarm bell will not be more than one normal gypsum wall penetration from an occupant. Walls with special soundproof ratings will require bells on both sides of the sound rated wall.

3. Visual Notification – Visual notification using strobes design and spacing complying with NFPA 72 and ADA will be installed in all corridors, common use areas such as restrooms, vending areas, lunch areas, conference rooms, lab areas, and any other area that has an occupancy loading of 10 or more. The strobe flashes will be synchronized throughout the building.

4. Smoke Detectors – Smoke detectors will be installed in locations specified on contract drawings. Smoke detectors are required in HVAC ductwork as indicated on the contract drawings and specified herein.

E. Related Work in Other Sections:

1. Interfacing of door holders, Division No. 8.

2. Interfacing of elevator controls, Division No. 14.

3. Interfacing of water flow devices, Division No. 15.

4. Interfacing of valve supervisory devices, Division No. 15.

5. Interfacing of duct mounted smoke detectors, Division No. 15.

6. Interfacing of controlled entrances, Division No. 16.

7. Interfacing of communication system, Division No. 16.

8. Interfacing of the Total Flood Clean Agent Fire Suppression System, Division No. 15.

1.02 CODES AND STANDARDS

A. Published specifications, standards, tests, or recommended methods of trade, industry, or governmental organizations apply to work in this section where cited below:

1. NFPA - National Fire Protection Association (NFPA-72 and 75).

2. Title 24 - California Administrative Code.

3. ADA - Americans with Disabilities Act.

1.03 SUBMITTALS

A. General:

1. Submit data for all materials and equipment in all sections of Division 16 in accordance with the requirements of Section 01300, "Descriptive Submittals", and as specified hereinafter.

2. Forward all submittals to the Sandia Delegated Representative (SDR), by "system" (i.e. 16500 Lighting System, 16710 Fire Alarm System, 16720 Intrusion Alarm System, etc.). Individually submitted items or incomplete submittals are not acceptable.

B. Product Data for each type of system component specified including dimensioned plans and elevations showing minimum clearances and installed features and devices. Include list of materials and Nationally Recognized Testing Laboratory (NRTL)-listing data.

C. Shop Drawings showing details of graphic annunciator.

D. Wiring diagrams from manufacturer differentiating clearly between factory- and field-installed wiring. Include diagrams for equipment and for system including each device with all terminals and interconnections identified. Make all diagrams specific to this Project and distinguish between field and factory wiring.

E. Floor Plans: Indicate final location of each device, panel, sample piping, and routings of raceway connections. Drawings to be same scale, size, and sector as full size bid documents. Submit reproducible drawings for initial submittal for approval and submit final record drawings as electronic files on a CD in AutoCAD release 14 or higher format.

F. Device Address List: Coordinate with final system programming.

G. System operation description covering this specific Project, including method of operation and supervision of each type of circuit and sequence of operations for all manually and automatically initiated system inputs and outputs. Manufacturer's standard descriptions for generic systems are unacceptable.

H. Operating instructions for mounting at the FACP.

I. Product certificates signed by manufacturers of fire alarm system components certifying that their products comply with specified requirements.

J. Maintenance data for fire alarm systems to include in the operation and maintenance manual specified in Division 1. Include data for each type of product, including all features and operating sequences, both automatic and manual. Include recommendations for spare parts to be stocked at the site. Provide the names, addresses, and telephone numbers of service organizations that carry stock of repair parts for the system to be furnished.

K. Record of field tests of system.

1.04 SYSTEM PERFORMANCE AND OPERATION

A. Activation of Manual Fire Alarm Station to:

1. Activate audible / visual alarm throughout building.

2. Provide audible / visual annunciation for the affected device at the fire alarm control panel. Illuminate the alarm LED on all system keypads.

3. Provide unique Form "C" relay operation via CRM-4 Controllable Relay Module or TRI-B6R Intelligent Interface Module to EMCS system.

4. De-energize door hold circuit via CRM-4 Controllable Relay Module.

5. Provide Form "C" relay operation via CRM-4 Controllable Relay Module to elevator controls to initiate elevator capture.

6. Provide Form "C" relay operation via CRM-4 Controllable Relay Module to controlled entrance to unlock door.

B. Activation of Water Flow Device to:

1. Activate audible / visual alarm throughout building.

2. Provide audible / visual annunciation for the affected device at the fire alarm control panel. Illuminate the alarm LED on all system keypads.

3. Provide unique Form "C" relay operation via CRM-4 Controllable Relay Module or TRI-B6R Intelligent Interface Module to EMCS system.

4. De-energize door hold circuit via CRM-4 Controllable Relay Module.

5. Provide Form "C" relay operation via CRM-4 Controllable Relay Module to elevator controls to initiate elevator capture.

6. Provide Form "C" relay operation via CRM-4 Controllable Relay Module to controlled entrance to unlock door.

7. Directly shut down all HVAC units in the building. The purge mode Firemans Control Panel shall be capable of overriding this function and turn HVAC units back on.

C. Activation of Room or Area Smoke Detectors as designated on Contract drawings to:

1. Activate audible / visual alarm throughout building.

2. Provide audible / visual annunciation for the affected device at the fire alarm control panel. Illuminate the alarm LED on all system keypads.

3. Illuminate lamp on the detector.

4. De-energize door hold circuit via CRM-4 Controllable Relay Module.

5. Provide Form "C" relay operation via CRM-4 Controllable Relay Module to controlled entrance to unlock door.

D. Activation of Duct Mounted Smoke Detector for an HVAC unit to:

1. Activate audible / visual alarm throughout building.

2. Provide audible / visual annunciation for the affected device at the fire alarm control panel. Illuminate the alarm LED on all system keypads.

3. Illuminate lamp on the detector.

4. Operate DA-X3SR Remote Relay at detector.

5. Shut down the HVAC unit that generated the alarm. The Firemans Control Panel purge mode shall override this function.

6. Provide unique Form "C" relay operation via CRM-4 Controllable Relay Module or TRI-B6R Intelligent Interface Module to EMCS system.

7. De-energize door hold circuit via CRM-4 Controllable Relay Module.

8. Provide Form "C" relay operation via CrM-4 Controllable Relay Module to controlled entrance to unlock door.

E. Activation of Duct Mounted Smoke Detectors for a smoke damper (supply or return) to:

1. Activate audible / visual alarm throughout building.

2. Provide audible / visual annunciation for the affected device at the fire alarm control panel. Illuminate the alarm LED on all system keypads.

3. Illuminate lamp on the detector.

4. Operate DA-X3SR Remote Relay at detector.

5. Shut down the HVAC unit that supplying air to this ductwork. The Firemans Control Panel purge mode shall override this function.

6. Close all fire/smoke dampers for the affected area (NFPA 75 room) after a 15 second time delay to avoid damage to the duct system. The Firemans Control Panel purge mode shall override this function and reopen the ducts.

7. Provide unique Form "C" relay operation via CRM-4 Controllable Relay Module or TRI-B6R Intelligent Interface Module to EMCS system.

8. De-energize door hold circuit via CRM-4 Controllable Relay Module.

9. Provide Form "C" relay operation via CRM-4 Controllable Relay Module to elevator controls to initiate elevator capture.

10. Provide Form "C" relay operation via CRM-4 Controllable Relay Module to controlled entrance to unlock door.

F. Activation of 1st Floor Elevator Lobby Smoke Detector to:

1. Activate audible / visual alarm throughout building.

2. Provide audible / visual annunciation for the affected device at the fire alarm control panel. Illuminate the alarm LED on all system keypads.

3. Illuminate lamp on the detector.

4. Provide a form "C" relay operation via a CRM-4 module to elevator controls to return the elevator to the 2nd floor where doors shall open and remain open until alarm is cleared.

5. De-energize door hold circuit via CRM-4 Controllable Relay Module.

6. Provide Form "C" relay operation via CRM-4 Controllable Relay Module to controlled entrance to unlock door.

G. Activation of 2nd Floor Elevator Lobby Smoke Detector to:

1. Activate audible / visual alarm throughout building.

2. Provide audible / visual annunciation for the affected device at the fire alarm control panel. Illuminate the alarm LED on all system keypads.

3. Illuminate lamp on the detector.

4. Provide a Form "C" relay operation via a CRM-4 module to elevator controls to return the elevator to the 1st floor where doors shall open and remain open until alarm is cleared.

5. De-energize door hold circuit via CRM-4 Controllable Relay Module.

6. Provide Form "C" relay operation via CRM-4 Controllable Relay Module to controlled entrance to unlock door.

H. Activation of any Smoke Detector within an NFPA 75 room as designated on fire protection drawings to:

1. Activate audible / visual alarm throughout building.

2. Provide audible / visual annunciation for the affected device at the fire alarm control panel. Illuminate the alarm LED on all system keypads.

3. Illuminate lamp on the detector.

4. Operate DA-X3SR Remote Relay at detector.

5. Shut down the HVAC unit that is supplying air to the affected (NFPA-75) rooms. The Firemans Control Panel purge mode shall override this function.

6. Close all fire/smoke dampers for the affected area (NFPA-75) rooms after a 15 second time delay to avoid damage to the duct system. The Firemans Control Panel purge mode shall override this function and reopen the ducts.

7. Provide unique Form "C" relay operation via CRM-4 Controllable Relay Module or TRI-B6R Intelligent Interface module to EMCS system.

8. De-energize door hold circuit via CRM-4 Controllable Relay Module.

9. Provide Form "C" relay operation via CRM-4 Controllable Relay Module to elevator controls to initiate elevator capture to the 1st floor.

10. Provide Form "C" relay operation via CRM-4 Controllable Relay Module to controlled entrance to unlock door.

I. Response from the FM 200 system (by spec section 15534) signals shall be:

1. A trouble signal from the FM 200 system shall:

a. Provide audible / visual annunciation for the affected device at the fire alarm control panel. Illuminate trouble LED on all system keypads until all faults have been cleared.

2. A Low Level Alarm from the FM 200 system shall:

a. Activate audible / visual alarm throughout building.

b. Shut down the HVAC unit that is supplying air to the affected room. The Firemans Control Panel purge mode shall override this function.

c. Close all fire/smoke dampers for the affected area (NFPA 75 room) after a 15 second time delay to avoid damage to the duct system. The Firemans Control Panel purge mode shall override this function and reopen the ducts.

d. Provide unique Form "C" relay operation via CRM-4 Controllable Relay Module or TRI-B6R Intelligent Interface Module to EMCS system.

e. De-energize door hold circuit via CRM-4 Controllable Relay Module.

f. Provide Form "C" relay operation via CRM-4 Controllable Relay Module to elevator controls to initiate elevator capture to the 1st floor.

g. Provide Form "C" relay operation via CRM-4 Controllable Relay Module to controlled entrance to unlock door.

3. A High Level Alarm from the FM 200 system shall (all responses from Low Level Alarm have already occurred):

a. Forward a custom message to the central alarm station.

4. A Discharge from the FM 200 system shall (all responses from Low Level Alarm have already occurred):

a. Forward a custom message to the central alarm station.

J. Activation of any EPO switch within an NFPA 75 rooms to:

1. Activate audible / visual alarm throughout building.

2. Provide audible / visual annunciation for the affected device at the fire alarm control panel. Illuminate the alarm LED on all system keypads.

3. Shut off all electrical panelboards providing power within that room/rooms. Lighting systems may remain energized.

4. Shut down the HVAC unit that is supplying air to the affected room. The Firemans Control Panel purge mode shall override this function.

5. Close all fire/smoke dampers for the affected area (NFPA 75 room) after a 15 second time delay to avoid damage to the duct system. The Firemans Control Panel purge mode shall override this function and reopen the ducts.

6. Provide unique Form "C" relay operation via CRM-4 Controllable Relay Module or TRI-B6R Intelligent Interface Module to EMCS system.

7. De-energize door hold circuit via CRM-4 Controllable Relay Module.

8. Provide Form "C" relay operation via CRM-4 Controllable Relay Module to elevator controls to initiate elevator capture to the 1st floor.

9. Provide Form "C" relay operation via CRM-4 Controllable Relay Module to controlled entrance to unlock door.

PART 2 PRODUCTS

2.01 MANUFACTURER

A. Unless otherwise noted, all devices, panels, systems, and software shall be manufactured by Cerberus Pyrotronics, no substitutions.

2.02 DEVICES

A. Manual Fire Alarm Station

1. Semi-flush mounting on 75 mm (3 inch) by 50 mm (1-7/8 inch) by 90 mm (3-1/2 inch) backbox. Surface mount on SB-5R backbox.

2. Manufacturer: Pyrotronics Model MSI-10B.

B. Water Flow and Valve Supervisory Device

1. Flow switch and valve supervisory switch are furnished and installed by Division 15 and wired by Division 16.

2. Manufacturer: Pyrotronics Model TRI-B6D to interface and supervise wiring of water flow and valve supervisory switches.

C. Addressable Interface Module

1. Interfaces and supervises wiring of normally open or normally closed contacts.

2. Provides Form "C" programmable output relay (TRI-B6R).

3. Contains 2 devices within 1 module (TRI-B6D).

4. Manufacturer: Pyrotronics Model TRI-B6, TRI-B6D, or TRI-B6R depending upon application.

D. Room or Area Smoke Detector

1. Intelligent fire print detector, addressable, with AD-X11RS mounting base. Manufacturer: Cereberus Pyrotronics Model FP-11.

E. Duct Mounted Smoke Detector

1. Furnished and wired by Division 16 and installed by Division 15.

2. Provision for isolated auxiliary contacts for EMCS use by Division 15.

3. Manufacturer: Pyrotronics

a. FP-11 intelligent fire detector.

b. Model AD-11xPR air duct housing with relay base.

c. Provide manufacturer's sampling tubes sized, located and installed per the manufacturer's recommendations and requirements. Coordinate sampling tube size requirements with Division 15.

F. Audible Notification Devices

1. 150 mm (6 inch) 24 VDC Vibrating Bell.

2. Semi-flush mounting on standard 100 mm (4 inch) square back box. Surface mount on Wheelock Model BB back box. Outdoor mount on Wheelock Model WBB back box.

3. Manufacturer: Wheelock Model MB-G6-24-R.

G. Visual Devices

1. Strobe sized as required or as indicated on Contract Drawings.

2. Lexan lens with the word FIRE inscribed..

3. Semi-flush mounting on standard 100 mm (4 inch) square back box. Surface mount on Wheelock Model SHBB-R back box.

4. Manufacturer: Wheelock RS or SR Synch Series depending upon application. Strobe synchronization required as delineated in NFPA 72.

H. Audible / Visual Devices

1. Wheelock RS or SR Synch Series strobe depending upon application. Strobe synchronization required as delineated in NFPA 72.

2. Wheelock Model MB-G6-24-R, 150 mm (6 inch) 24 VDC Vibrating Bell.

3. Semi-flush mounting on standard 100 mm (4 inch) square back box. Surface mount on Wheelock Model SBL back box.

I. Door Holders

1. 24 VDC door holders are furnished and installed by Division 8 and wired by Division 16.

2. Door solenoids shall be energized via an externally mounted power supply that is not part of the listed fire alarm system.

2.03 FIRE ALARM CONTROL PANEL

A. Pyrotronics Model MXL addressable fire alarm control panel. All listed quantities are required minimums only. Additional modules or enclosures shall be furnished and installed as required for a complete and operational system:

1. 1 ea. Model MMB-2 Main Control Board

2. 1 ea. Model MKB-2 Annunciator / Keypad

3. 1 ea. Model MPS-12 Power Supply

4. 1 ea. Model BTX Battery Compliment sized for twenty-four (24) hour back-up, minimum size 15 AH

5. 2 ea. Model MOM-4 Network Option Module Card Cage

6. 1 ea. Model ALD-2I Analog Loop Driver

7. 1 ea. Model CSM-4 Controllable Signal Module

8. 1 ea. Model CRM-4 Controllable Relay Module

9. 1 ea. Model CMI-300 CXL/MXL Interface Module

10. 1 ea. Model NIM-IR Card (Spare card for future use by Sandia).

2.04 SOFTWARE

A. Software as follows:

1. CSG software with latest firmware compatible with that previously installed at Sandia.

2. Provide one CSG re-program of fire alarm system at Sandia's direction and the contractor's expense anytime within the first year after system acceptance.

3. Furnish hardcopy and disk copy of system CSGM at the time of initial program and any subsequent re-program.

B. Custom message list will be furnished upon request.

C. Special functions as follows:

1. Programmed function button to temporarily disable door holder release during testing.

2. Programmed function button to temporarily disable elevator capture during testing.

3. Programmed function button to temporarily disable controlled entrance unlock during testing.

4. Programmed function button to temporarily disable all EMCS outputs during testing.

5. Programmed function button to temporarily disable all notification circuits during testing.

2.05 HIGH SENSITIVITY SMOKE DETECTION SYSTEM (HSSD)

A. The High Sensitivity Smoke Detection System, HSSD will all be designed and coordinated with the Total Flood Clean Agent Fire Suppression System (15534) for a complete turn-key installation.

B. System Description

1. The high sensitivity smoke detection system provides early warning of a fire in its incipient stage. AnaLASER detectors shall be installed to sample the air from a protected area. The area includes the space within the areas as designated on the Contract drawings.

2. In operation, air from the protected zone is drawn through a piping network to the detector unit by an aspirating fan in the detector assembly. The air is then illuminated by a laser light source. Smoke particles scatter this light to a sensitive solid-state photo sensor. An analog signal is transmitted to the Display Control Card which displays smoke obscuration levels on a bar graph display. Each increment on the bar graph represents 10% of the full-scale sensitivity of the detector.

3. Three independently programmable alarm points provide additional visual indication of the Display Control card and activate associated relays for additional annunciation and alarm. The HSSD system outputs shall interface directly to the Total Flood Clean Agent Fire Suppression System (15534). The Total Flood Clean Agent Fire Suppression System (15534) will then report to the Fire Alarm and Detection system.

4. Similar systems which incorporate a flashing Xenon tube light source that requires frequent replacement, unless all of the conditions of Part 2 of this specification are met, will not be considered in any manner as an equal or replacement to the AnaLASER Laser Light Source System. The light source utilized shall have a life expectancy greater than 10 years from date of system start-up.

C. DISPLAY CONTROL PANEL

1. The display Control Panel shall be Fenwal Model No. 89-100058-002. The Display Control Panel shall consist of an enclosure assembly, installation kit, and required number of Display Control Cards for two zones as shown on the contract drawings. Each Display Control Panel shall be powered from a 24 VDC source and monitored for alarm and trouble condition by the building fire alarm system. The panel shall have the following light indications: 10 light bar graph, 3 alarm level lights, air flow fault light, detector fail light, CPU fail light, normal operation indicator, power supply trouble light, isolate light, signal offset light, and signal averaging indicator light.

2. The control unit shall incorporate all of the following features:

   a. Built-in data and event logger.

   b. Programmability via a PC or terminal.

   c. Signal averaging.

   d. Signal offset.

e. Remote test capability.

f. Remote real-time display.

g. System integration with FN 4000/1000 control equipment via an intelligent interface card.

D. DETECTOR ASSEMBLY

1. The Detector Assembly shall be Fenwal Model No. 89-100000-012.

2. The AnaLASER Detector is mounted in an enclosure which contains a fan that draws air through the piping network and into an air chamber in the detector.

a. The detector shall examine particles drawn in by the fan by illuminating them in a small chamber using a laser and a photo detector to capture the light scattered by the particulate matter. The sensitivity level shall be .006 to .06 percent obscuration per foot.

b. The particle size discriminator shall inhibit the output whenever a particle pulse exceeds a predetermined amplitude, thus permitting the detector to ignore large pulses commonly produced by dust or other airborne contaminant.

c. A logic pulse associated with each particle detected shall be used to produce an analog signal that shall be proportional in value to the amount of particulate matter detected.

E. POWER SUPPLY ASSEMBLY

1. The Power Supply Assembly included as part of the control equipment shall be mounted directly beneath the Display Control Panel.

2. The Power Supply shall provide 24-hour battery back-up along with battery supervision and ground fault protection on power circuits. The power supply consists of an enclosure containing the power supply module and two 300 amp-hour batteries. One power supply assembly will provide power for two zones of control.

F. ENGINEERING SAMPLING PIPE NETWORK

1. Piping network(s) shall be laid out to provide detection points with spacing as recommended by the manufacturer. Refer to Article 3.02 of this specification for additional information. Piping shall be 3/4" I.D. pipe with airtight connections or as required by the manufacturer.

2. Pipes shall be supported from floor slab using unistrut and clamps at intervals of no more than four (4) feet on center to ensure stability of the piping and reduce the possibility of cracks or breaks at the joints. Pipe shall be supported at no less than three (3) inches above subfloor.

3. All connections and joints shall be made with standard connections designed to

be compatible with the pipe material.

4. All joints shall be airtight to prevent air leakage or infiltration which may adversely affect the desired venturi effect in the piping.

5. Sampling points shall be at locations shown on contract drawings, or as shown, on approved shop drawings. Sampling points shall be configured per manufacturer's approved shop drawings. Provide all sampling point pipe caps with predrilled holes per manufacturer's shop drawings.

6. Sample pipe network shall be of the closed end engineered design. Systems using "Open End" design will not be allowed.

2.06 CONDUIT AND WIRING

A. Wiring Systems:

1. Insulation meeting applicable standards for fire alarm wiring.

2. Initiating Circuits: Minimum 1.5 mm2 (#16 AWG) THHN (RD positive, BK negative).

3. Indicating and Control Circuits: Minimum 2.5 mm2 (#14 AWG) THHN (RD positive, BK negative).

4. *No T-tapping of any kind shall be permitted without approval from the SDR.*

B. Raceway Systems:

1. Independent of all other systems, except as noted.

2. *Initiating circuits shall be independent of all other circuits.*

3. *In a 4 wire Class 'A' circuit, not more than two (2) wires shall be permitted to occupy the same conduit or intermediate junction box without approval from the SDR.*

PART 3 EXECUTION

3.01 INSTALLATION OF FIRE ALARM AND DETECTION SYSTEM

A. Install conduit, wire, and terminate to Divisions 8, 15, and 16 equipment at all interface points (excluding duct-mounted smoke detector supplemental relay points).

B. Cables shall be installed in continuous lengths without splices from device to device with all cables labeled appropriately.

C. The manufacturer's authorized and licensed representative shall provide all termination, programming, and supervision of the installation and testing of the complete Fire Alarm System.

3.02 FIELD TESTS

A. Following Complete Installation:

1. Test insulation resistance of the Fire Alarm System conductors after installation. Each conductor shall show at least 1 Meg-Ohm resistance to ground and to all other conductors connected together.

2. Operate all parts of system, including back-up capabilities.

3. Test all devices for specified operation.

4. Test control panel for proper operation.

B. Final Acceptance:

1. Final acceptance shall require an inspection and complete functional and operational test of the system in the presence of the SDR.

2. At this time, any and all required tests shall take place, and any defects corrected until the system is found to be acceptable. Furnish all instruments, labor, and materials required for tests.

3. Submit complete test report and Record of Completion Form (in a form equivalent to NFPA 72 Inspection and Testing Form) to the SDR within five (5) working days after acceptance.

END OF SECTION

SECTION 16715

FIRE CONTROL PANEL

PART 1 GENERAL

1.01 DESCRIPTION

A. Work included in this section: Materials, equipment, fabrication, installation, and tests for the following:

1. Fire control panel:

a. Switches
b. Enclosure
c. Conduit and wiring
d. All necessary accessories

B. Related Work in Other Sections:

1. Painting, Division No. 9.

2. Interfacing devices, Division No. 15.

1.02 SYSTEM PERFORMANCE AND OPERATION

A. Separate Hand-Off-Auto control of each mechanical unit as shown on the Contract Documents.

B. Activation of HAND switch position to:

1. Provide a unique contact closure to the EMCS to initiate smoke purge mode.

C. Activation of OFF switch position to:

1. Provide a unique contact closure to the EMCS to initiate off mode.

D. Activation of AUTO switch position to:

1. Provide a unique contact closure to the EMCS to initiate automatic mode.

PART 2 PRODUCTS

2.01 SWITCHES

A. Hand-Off-Auto switches shall be heavy duty, oiltight, three position, non-illuminated knob and wing lever selector switch with maintained form 'C' contacts. GE Catalog No. SG34B91 or equivalent.

2.02 ENCLOSURE

A. Flush or surface mount enclosure depending upon location. Size as shown on Contract Documents.

1. Continuous piano hinge on front door.

2. Swing out panel kit with hinge and securing brackets.

3. Swing out panel kit shall be pre-drilled for future switches. Install hole seals in all unused penetrations.

4. Minimum 200 mm by 300 mm (8-1/2 inch by 11 inch) lexan holder shall be mounted on the back side of the enclosure door for a Sandia supplied building map.

5. Switches shall have engraved legend plates designating which unit is being controlled as shown on the Contract Documents.

6. Enclosure shall be painted to match fire alarm devices installed under this Division.

2.03 CONDUIT AND WIRING

A. Insulation meeting applicable standards for EMCS wiring.

B. Raceway Systems:

1. Independent of all other systems, except as noted.

PART 3 EXECUTION

3.01 INSTALLATION OF FIRE ALARM AND DETECTION SYSTEM

A. Fabricate and install enclosure, devices, conduit, and wire under this Division.

1. All internal wiring shall be installed with cable ties, in wiring channels and expansion loops at all hinges, as required.

2. All wiring shall be labeled at both ends and a 2000 mm (6 foot) pigtail shall be left in the EMCS equipment for termination by Division 15.

B. The EMCS manufacturer's authorized and licensed representative shall provide all programming and supervision of the installation and testing of the complete Fire Control Panel under Division 15.

3.02 FIELD TESTS

A. Following Complete Installation:

1. Test insulation resistance of the Fire Control Panel conductors after installation. Each conductor shall show at least 1 Meg-Ohm resistance to ground and to all other conductors connected together.

2. Test all devices for specified operation.

3. Test control panel for proper operation.

B. Final Acceptance:

1. Final acceptance shall require an inspection and complete functional and operational test of the system in the presence of the SDR.

2. At this time, any and all required tests shall take place, and any defects corrected until the system is found to be acceptable. Furnish all instruments, labor, and materials required for tests. Submit complete test reports to the SDR within five (5) working days after acceptance.

END OF SECTION

SECTION 16720

INTRUSION ALARM SYSTEM

PART 1 GENERAL

1.01 DESCRIPTION

A. Work included in this section: Materials, equipment, fabrication, installation, and tests for the following:

1. Space Sensors
2. Switches
3. Electric Door Locking Mechanisms
4. Handicap Door Operators
5. Badge Readers
6. Exit Request Switches
7. Controller
8. Remote Modules
9. Boxes
10. Cable

B. Related Work in Other Sections:

1. Interfacing of door switches, Division No. 8.

2. Interfacing of electric door locking mechanisms, Division No. 8.

3. Interfacing of handicap door operators, Division No. 8.

4. Painting, Division No. 9.

5. Interfacing of fire alarm system, Division No. 16.

6. Interfacing of communication system, Division No. 16.

PART 2 PRODUCTS

2.01 DEVICES

A. Space Sensors

1. *Consult Security for application and device to be used.*

2. *Manufacturer: See above.*

B. Switches

1. Flush mount man door switch:

    a. High security, triple bias, flush mount switch with 12 VDC self-test feature.

    b. Manufacturer: Sentrol Model No. 2757DL4, no substitutions.

2. Surface mount man door switch:

    a. High security, triple bias, explosion proof, surface mount switch with 12 VDC self-test feature.

    b. Manufacturer: Sentrol Model No. 2808T, no substitutions.

    c. Fabricate door brackets using 3 mm (1/8 inch) flat stock aluminum, when applicable.

3. Roll-up door switch:

    a. High security, triple bias, surface mount switch.

    b. Manufacturer: Sentrol Model No. 2727-A, no substitutions.

    c. Fabricate door brackets using 3 mm (1/8 inch) flat stock aluminum, when applicable.

4. Concealed duress switch:

    a. Lever action switch with latching LED reset and SPDT contacts.

    b. Manufacturer: Sentrol Model No. 3040, no substitutions.

C. Electric Door Locking Mechanisms

1. Normally open contact interface to release door locking mechanism.

2. Electric door locking mechanisms are furnished and installed by Division No. 8 and wired by Division No. 16.

D. Handicap Door Operators

1. Normally open contact interface to release door locking mechanism and initiate door open operation without hold open.

2. Normally open contact interface for exterior handicap button shunt.

3. Handicap door operators are furnished and installed by Division No. 8 and wired by Division No. 16.

E. Badge Readers

1. Mullion Mounted:

a. Weatherized, 5 VDC surface mount magnetic stripe reader without keypad.

b. Manufacturer: InfoGraphic Systems Model No. RMS-10W, no substitutions.

2. Wall Mounted:

a. Intelligent:

(1) 24 VDC surface mount integrated magnetic stripe reader with keypad.

(2) Manufacturer: InfoGraphic Systems Model No. RMS-1 or RMS-2 depending upon application, no substitutions.

b. Nonintelligent:

(1) Weatherized, 5 VDC surface mount (on back panel) magnetic stripe reader with keypad.

(2) Manufacturer: InfoGraphic Systems Model No. RMS-11W, no substitutions.

F. Exit Request Switches

1. Wall Mounted:

a. Active infrared motion sensor for access control.

b. Surface mounted, 24 VDC operation.

c. Manufacturer: Optex Model No. OA-30B, no substitutions.

d. Coordinate device color with finish specifications.

2. Ceiling or Wall Mounted:

a. Passive infrared motion sensor for access control.

b. Surface mounted, 12 or 24 VDC operation.

c. Manufacturer: Detection Systems, Inc. Model DS150i, no substitutions.

G. Controller

1. Networked intelligent controller

2. Factory flush mounted, lockable enclosure with tamper switch.

3. Enclosure shall be field painted to match adjacent walls.

4. Manufacturer: InfoGraphic Systems Model No. ACU-C2B with DES encryption kit 133258 and 1 each battery kit ACU-BAT-2, no substitutions.

H. Remote Modules

1. Remote Input Module:

a. Factory flush mounted, lockable enclosure with tamper switch.

b. Enclosure shall be field painted to match adjacent walls.

c. Manufacturer: InfoGraphic Systems Model No. RIM-1, no substitutions.

2. Remote Relay Module:

a. Factory flush mounted, lockable enclosure with tamper switch.

b. Enclosure shall be field painted to match adjacent walls.

c. Manufacturer: InfoGraphic Systems Model No. RRM-1, no substitutions.

3. Remote Reader Electronics:

a. Factory flush mounted, lockable enclosure with tamper switch (RRE-1, RRE-2, and RRE-X only).

b. Enclosure shall be field painted to match adjacent walls (RRE-1, RRE-2, and RRE-X only).

c. Manufacturer: InfoGraphic Systems Model No. RRE-0 (no enclosure), RRE-1, RRE-2, or RRE-X (enclosure only) depending upon application, no substitutions.

2.02 BOXES

A. Pull Boxes

1. Continuous hinged gasketed door with pad lock.

2. NEMA Type 13 enclosure 300 mm (12 inch) by 300 mm (12 inch) by 150 mm (6 inch) deep, 1.9 mm (14 gage) thickness with back panel.

3. ANSI 61 gray polyester powder coating inside and out over phosphatized surfaces. Enclosure shall be field painted to match adjacent walls.

4. Manufacturer: Hoffman, Bulletin A-51 Catalog No. A-1212CH with A-12P12 panel or equal.

2.03 CABLE

A. Cables sized as indicated on the Contract Documents.

B. Power limited 300 V 105°C Cable.

C. Stranded conductors , tinned copper, PVC insulated, pairs with overall Beldfoil shield and stranded tinned copper drain wire. Chrome sunlight resistant PVC jacket.

D. Acceptable Manufacturer: Belden Process Control Instrumentation Cable.

PART 3 EXECUTION

3.01 SWITCH INSTALLATION

A. Locate at top of door 150 mm (6 inch) away from latch side.

B. Install flush with frame and door. Maximum gap 13 mm (1/2 inch).

C. Insure no metal to magnet contact within door assembly.

3.02 REMOTE READER ELECTRONICS

A. Locate within 2700mm (9 feet) of nonintelligent badge readers.

3.03 Raceway

A. All raceway shall be separate from other systems. No intermediate junction boxes shall be permitted unless specifically shown on the contract drawings.

3.04 CABLES

A. Cables shall be installed in continuous lengths without splices from device to device with all cables labeled appropriately.

B. Adequate cable length shall be left at each device for termination by Sandia.

3.05 FIELD TESTS

A. All wiring shall be tested successfully for continuity.

B. All switches shall be field tested and adjusted until they are aligned and operating properly.

END OF SECTION

SECTION 16740

SECURE COMMUNICATION SYSTEM

PART 1 GENERAL

1.01 DESCRIPTION

A. Work Included in This Section: Materials, equipment, fabrication, installation, and testing for the following:

1. Cables
2. Pull Boxes
3. Terminal Backboard

PART 2 PRODUCTS

2.01 CABLE

A. Secure communication cable shall be one 2 pair individually shielded 0.25 mm2 (22 gage) Belden 8723 or equivalent per installed outlet.

B. Cable shall be supplied on reels of continuous lengths.

2.02 OUTLET DEVICES

A. Secure communication jacks shall be provided, installed, and terminated by Sandia.

2.03 PULL BOXES

A. Pull boxes shall be constructed of zinc-coated steel and sized as indicated on contract drawings. Doors shall be hinged and latched with a hasp lock.

2.04 TERMINAL BACKBOARD

A. Provide a 1200 mm (4 foot) by 2400 mm (8 foot) by 20 mm (3/4 inch) thick Fire-rated plywood panel, Grade "AD".

PART 3 EXECUTION

3.01 GENERAL

A. All outlets shall individually homerun to a central collection point (terminal board or pullbox as specified) with 20 mm (3/4 inch) conduits.

B. The cable systems outlined in the contract drawings shall be installed in their entirety with all cables labelled at both ends.

C. All conduits installed shall be capable of accepting fiber optic cable at a later date. Minimum bending radius of installed fiber optic cable shall be 150 mm (6 inches).

3.02 CABLES

A. Secure communication cables shall be installed in continuous lengths without splices from outlet to terminal board without exception. Label both ends of each cable appropriately, and coil 1 m (3 feet) of cable at the outlet end and 3 m (10 feet) at the backboard end. Cable will be terminated at both ends by Sandia.

3.03 FIELD TEST

A. Perform a continuity test on all conductors and submit report to SDR

END OF SECTION

SECTION 16741

COPPER COMMUNICATION SYSTEM

PART 1 GENERAL

1.01 DESCRIPTION

A. Work Included in This Section: Materials, equipment, fabrication, installation, and testing for the following:

1. Cables
2. Outlets
3. Pull Boxes
4. Connector Blocks
5. Backboard
6. Accessories
7. Splice Case
8. ISDN Power Supply

1.02 SUBMITTALS

A. General:

1. Submit data for all materials and equipment in all sections of Division 16 in accordance with the requirements of Section 01300, "Descriptive Submittals", and as specified hereinafter.

2. Forward all submittals to the Sandia Delegated Representative (SDR), by "system" (i.e. 16500 Lighting System, 16710 Fire Alarm System, 16720 Intrusion Alarm System, etc.). Individually submitted items or incomplete submittals are not acceptable.

B. Submit catalog data for each type of equipment, outlet, and terminals being furnished.

C. Submit qualifications of each person performing cable splices, terminations, and installing connectors.

D. Submit wiring diagrams of equipment being installed.

E. Submit test reports of cable testing as specified in paragraph 3.05 Acceptance Tests.

F. Supply O & M Manuals at completion of project that has catalog data, wiring diagrams, test reports in a 3 ring binder containing tabs for each subject.

G. Submit as-built floorplans with outlet labels clearly shown.

PART 2 PRODUCTS

2.01 CABLE

A. Unsecure communication system shall consist of two (2) 4 pair, 0.12 mm2 (24 AWG), Type CM, Level 5 plenum premises cables with solid bare copper conductors, thermoplastic insulation, and conductors twisted to varying lengths of lay Anixter No. CM00424CAG-5U or equivalent per installed duplex outlet.

B. Cable shall be supplied on reels of continuous lengths without splices.

2.02 OUTLETS

A. M-Series Information Outlet: Outlets shall be, 8-position / 8-conductor. Insulation displacement connectors shall accept 0.12 mm2 (24 AWG) solid wire in accordance with EIA/TIA-568B wiring label. Outlets shall be compatible with Category 5 transmission requirements for connecting hardware specified in EIA/TIA TSB-40. Outlets shall be Anixter No. 14993X, Vendor No. M100BH-24X, Comcode 10682159X, or equivalent. Coordinate device color with finish specifications.

B. M-Series Modular Mounting Frame: Flush-mounted multi-outlet modular mounting frame shall be a duplex (2-hole) configuration designed for use with M-Series Information Outlets. Frames shall be Anixter No. 1423XX, Vendor No. M106FR2-24X, Comcode 1066222XX, or equivalent. Flush mount using nylon wall plate. Coordinate device and wall plate color with finish specifications.

C. Surface mount M-Series Modular Quadplex Box: Surface mount modular box shall be a quadplex (4-hole) configuration (with 2 holes blanked off) designed for use with M-Series Information Outlets. Modular box shall be shall be Anixter No. 142383, Vendor No. M104SMB-246, Comcode 106658107, or equivalent. Coordinate device color with finish specifications.

2.03 PULL BOXES

A. Pull boxes shall be constructed of zinc-coated steel and sized as indicated in the Contract Documents. Doors shall be hinged and capable of being latched with a hasp lock.

B. Any intermediate junction boxes required to be installed to achieve compliance with the cable installation requirements for maximum number of bends or maximum pulling tension shall be properly sized for the application. These junction boxes are not shown on the Contract Documents, but are still required as part of a complete installation.

2.04 CONNECTOR BLOCKS

A. Connector blocks shall consist of 100 two-prong clips, 50 pair block, constructed of molded, self-extinguishing plastic containing phosphor bronze, tin plated quick clips for making connections. They shall terminate unskinned plastic-insulated solid copper conductors from 0.5 mm2 (20 AWG) through 0.06 mm2 (26 AWG) wire and be compatible with Category 5 transmission requirements for connecting hardware specified in EIA/TIA TSB-40. Connector blocks shall be Anixter No. 005815, Vendor No. S66M1-50, or equivalent.

2.05 SPLICES

A. Furnish and install re-enterable waffle type splice case(s) for use in telephone manhole. Provide a 3M product or approved equal.

2.06 ACCESSORIES

A. All terminals shall be accessorized as follows: All connector blocks shall be mounted to AT&T No. 183-B1 blue backboards using appropriate hardware. AT&T No. 187-B1 white boards shall be mounted above the blue boards.

2.07 ISDN POWER SUPPLIES

A. Provide and install as indicated ISDN power supplies. Power supplies shall include battery backup option. Manufacturer: SEI, Inc. Model #DP240B-48-16 with additional BP8 battery No exceptions. Power cables shall be extended to connector blocks Anixter No. 005815, Vendor No. S66M1-50, or equivalent on yellow boards mounted above the white boards.

2.08 BUILDING ENTRANCE PROTECTION

A. Provide and install building entrance protection Avaya/Lucent Type 489, Anixter No. 195407, Vendor Number 489BCS1-100, with protector coils Anixter No. 106805, Vendor No. 4C1S, or equivalent. Cables shall be extended to connector blocks Anixter No. 005815, Vendor No. S66M1-50, or equivalent on green boards mounted above the white boards.

PART 3 EXECUTION

3.01 GENERAL

A. Installation shall be in compliance with EIA/TIA 568B, EIA/TIA 569, and ANSI/CEA S-80-576.

B. All outlets shall individually homerun to a central collection point (terminal or pullbox as specified) with 20 mm (3/4 inch) conduit.

C. The cable system described in the Contract Documents shall be installed in their entirety with all cables labeled, terminated, and connected at both ends.

D. All conduits installed shall be capable of accepting fiber optic cable at a later date. Minimum bending radius of installed fiber optic cable shall be 150 mm (6 inches).

E. The terminal shall be installed and configured as indicated in the Contract Documents

F. Install a telephone jack next to each abort station for the FM200 Fire Suppression System located in Rooms W111 and W126. The phone system will be connected directly to the Central Alarm Station (CAS) such that the phone will auto-dial the CAS when picked up. The phone will be government furnished. See Specification Section 15534 for abort station locations.

3.02 CABLES

A. Unsecure communication cables shall be installed in continuous lengths without splices from outlet to connection block without exception.

B. Cable terminations shall be made at both the outlet and at the connector block for all conductors as shown.

C. No untwisted wires (pairs) greater than 13 mm (1/2 inch) in length shall be permitted, especially at terminations.

3.03 LABELING

A. All connector blocks, outlets, and cables shall be labeled as shown in the Contract Documents. Cables shall be labeled at both ends. Labeling convention shall be as follows: Each cable shall constitute a separate point. The corresponding outlet jack and connector block shall be identically labeled. This label shall consist of consecutively numbered points (1, 2, 3, 4, etc.) only. No other superfluous information will be accepted (no room numbers, letters, etc.). Numbering convention shall be ordered by room number and then clockwise within each room or space beginning with the outlet nearest the door.

B. Connector Block: Label with consecutively numbered point as indicated in the Contract Documents.

C. Outlet: Label each jack with consecutively numbered point as indicated in the Contract Documents.

D. Cables: Label with consecutively numbered point at both ends. Permanent type marker may be used if writing is legible.

3.04 QUALIFICATIONS

A. Prior to the start of work, the Contractor shall submit to the SDR and secure approval, the qualifications of the firm which will be performing installation of the cable splices, terminators, and connectors. This shall also include a certificate of qualification for each person who will be assigned to perform this work. Minimum qualifications include at least five (5) years of experience in the installation, inspection, and testing of communication systems.

1. The qualifications listed shall cover, as a minimum, the individual's name, background of related special training in the trade, number of years of experience, and references from jobs performed in the last two years.

3.05 ACCEPTANCE TESTS

A. The Contractor shall utilize the services of an independent testing organization which is regularly engaged in the testing of communication cables such as T&D Communications, Inc. of Mountain View, CA, or approved equal.

1. The testing shall be in accordance with NETA guidelines and shall be performed in the presence of the Contractor.

B. The SDR shall witness all acceptance testing.

C. A certified test report that the copper communication system has been installed properly and is operating satisfactory shall be signed by the Contractor and the representative of the testing organization and submitted to the SDR as described in Section 01300.

D. The following are guidelines for the testing of communication cables.

1. Visual and Mechanical Inspection:

a. Inspect cables for physical damage and proper connection in accordance with the Contract Documents.

b. Inspect splices and connections for physical damage and proper connection in accordance with the Contract Documents.

2. Field Tests:

a. Perform a continuity test of all installed conductors and correct any open, shorted, or miswired devices.

END OF SECTION

SECTION 16742

FIBER OPTIC COMMUNICATION SYSTEM

PART 1 GENERAL

1.01 DESCRIPTION

A. Work Included in This Section: Materials, equipment, fabrication, installation, and testing for the following:

1. Fiber Optic Cables
2. Connectors and Couplers
3. Wall Boxes
4. Pull Boxes
5. Terminals

PART 2 PRODUCTS

2.01 FIBER OPTIC CABLE

A. Multimode: Siecor 50 / 125 µm cable with 12 fibers
Catalog No. 012C81-31131-05. No substitutions.

B. Single mode: Siecor 8.3 / 125 µm cable with 4 fibers
Catalog No. 004-R81-31131-04. No substitutions.

C. Cable shall be supplied on reels of continuous lengths without splices.

2.02 CONNECTORS AND COUPLERS

A. Connectors shall consist of AT&T multimode ST connectors AT&T No. P2020C, Comcode 105143911. No substitutions.

B. Couplers shall consist of AT&T multimode ST couplers AT&T No. C2000A-2, Comcode 104148028. No substitutions.

2.03 WALL BOXES

A. Wall box shall consist of an AT&T basic outlet enclosure AT&T No. 401A, Comcode 106358807 with AT&T coupling panel AT&T No. 40-6H, Comcode 106728017. No substitutions.

2.04 PULL BOXES

A. Pull boxes shall be constructed of zinc-coated steel and sized as indicated in the Contract Documents. Doors shall be hinged and capable of being latched with a hasp lock.

B. Any intermediate junction boxes required to be installed to achieve compliance with the fiber optic cable installation requirements for maximum number of bends or maximum pulling tension shall be properly sized for the application. These junction boxes are not shown on the Contract Documents, but are still required as part of a complete installation.

2.05 TERMINALS

A. 600 mm (23 inch) equipment rack(s) shall be Sandia furnished, Contractor installed as indicated in the Contract Documents.

B. 3M Fiber Optic Housing, 12 drawer 3M No. 2131. No substitutions.

C. 3M Fiber Optic ST Multimode Drawer 3M No. 2135MM. No substitutions.

PART 3 EXECUTION

3.01 GENERAL

A. Installation shall be in compliance with EIA/TIA 568, EIA/TIA 455, and Bellcore TR-TSY-000020.

B. All wall boxes shall individually homerun to a central collection point (terminal or pullbox as specified) with 25 mm (1 inch) conduit. A maximum of three (3) ninety degree (90°) bends shall be allowed between adjacent pull points.

C. The cable systems outlined in the Contract Documents shall be installed in their entirety with all fiber optic cables labeled, terminated, and connected at both ends. Singlemode fiber optic cables shall be left unterminated for future use by Sandia.

D. All conduit installed shall be capable of accepting fiber optic cable. Minimum bend radius of installed fiber optic cable shall be 75 mm (3 inches).

3.02 FIBER OPTIC CABLES

A. Fiber optic communication cables shall be installed in continuous lengths without splices from wall box to terminal without exception.

B. Multimode fiber optic cables shall be terminated as follows:

1. Terminations shall be made at the wall box and terminal for all multimode fibers.

2. A minimum 1200 mm (4 foot) service loop shall be left at the wall box and terminal after termination.

3. Terminated fibers shall be equipped with ST connectors at the wall box and terminal.

C. Singlemode fiber optic cables shall be terminated as follows:

1. Singlemode fibers shall be left unterminated.

2. A minimum 1800 mm (6 foot) service loop shall be left at the wall box.

3. A minimum 9000 mm (30 foot) service loop shall be left at the terminal within the equipment rack(s).

3.03 LABELING

A. Wall box cover interiors shall be labeled as follows: The last 3 digits of the building, followed by a floor designator (F=first, S=second, B=basement), followed by the terminal housing ID (A through Z, consecutively top to bottom), followed by the terminal drawer designator (01 through 12, consecutively top to bottom), followed by a dash, followed by the last 3 digits of the building, followed by a slash, followed by the room number, followed by a dash, followed by the room designator (numbered consecutively staring from 1 within the same room). For example: 911FA01-911/110A-1

B. Cables shall be labeled at both ends as follows: The last 3 digits of the building, followed by a floor designator (F=first, S=second, B=basement), followed by the terminal housing ID (A through Z, consecutively top to bottom), followed by the terminal drawer designator (01 through 12, consecutively top to bottom), followed by a dash, followed by the last 3 digits of the building, followed by a slash, followed by the room number, followed by a dash, followed by the room designator (numbered consecutively staring from 1 within the same room). For example: 911FA01-911/110A-1

C. Terminal drawer fronts shall be labeled as follows: The last 3 digits of the building, followed by a floor designator (F=first, S=second, B=basement), followed by the terminal housing ID (A through Z, consecutively top to bottom), followed by the terminal drawer designator (01 through 12, consecutively top to bottom), followed by a dash, followed by the last 3 digits of the building, followed by a slash, followed by the room number, followed by a dash, followed by the room designator (numbered consecutively staring from 1 within the same room). For example: 911FA01-911/110A-1

D. Terminal housing doors shall be labeled as follows: The last 3 digits of the building, followed by a floor designator (F=first, S=second, B=basement),

followed by the terminal housing ID (A through Z, consecutively top to bottom) For example: 911FA

3.04 QUALIFICATIONS

A. Prior to the start of work, the Contractor shall submit to the SDR and secure approval, the qualifications of the firm which will be performing installation of the cable splices, terminators, and connectors. This shall also include a certificate of qualification for each person who will be assigned to perform this work. Minimum qualifications include factory certification for fiber optic installations by AT&T, Siecor, or equivalent and at least five (5) years of experience in the installation, inspection, and testing of fiber optic communication systems.

1. The qualifications listed shall cover, as a minimum, the individual's name, background of related special training in the trade, number of years of experience, and references from jobs performed in the last two years.

3.05 ACCEPTANCE TESTS

A. The Contractor shall utilize the services of an independent testing organization which is regularly engaged in the testing of fiber optic cables.

1. The testing shall be in accordance with EIA/TIA 455 guidelines and shall be performed in the presence of the Contractor.

B. The SDR shall witness all acceptance testing.

C. A certified test report that the fiber optic communication system has been installed properly and is operating satisfactory shall be signed by the Contractor and the representative of the testing organization and submitted to the SDR as described in Section 01300.

D. The following are EIA/TIA guidelines for the testing of fiber optic cables.

1. Visual and Mechanical Inspection:

a. Inspect cables for physical damage and proper connection in accordance with the Contract Documents.

b. Inspect splices and connections for physical damage and proper connection in accordance with the Contract Documents.

2. Field Tests:

a. Perform cable length measurement and detect fiber fractures or other defects through analysis of the backscattering signal with an optical time domain reflectometer (OTDR).

b. Perform a continuity test to detect fractures or other defects through analysis of the backscattering signal using the OTDR.

c. Perform bi-directional attenuation measurement of the cable loss with a multimode optical loss test set (MOLTS).

d. Perform attenuation measures of the losses of each splice and connector.

3. Test Values:

a. Attenuation measurement (losses) shall be expressed in dB, test to be performed at a propagation velocity of both 850 nm and 1300 nm.

b. Bandwidth measurement shall be expressed in MHz / km, test to be performed at a propagation velocity of both 850 nm and 1300 nm.

4. Test Results:

a. Test results shall meet the cable manufacturer's attenuation and bandwidth specifications at the specified test frequencies.

b. Attenuation results shall meet the requirements of the interface hardware.

END OF SECTION

SECTION 16770

PUBLIC ADDRESS SYSTEM

PART 1 GENERAL

1.01 DESCRIPTION

A. Work included in this section: Materials, equipment, fabrication, installation, and tests for the following:

1. Cables
2. Speakers

PART 2 PRODUCTS

2.01 CABLE

A. Speaker cable shall be 1 pair 2.5 mm2 (#14 AWG) shielded cable, Belden 8720 or equivalent.

2.02 SPEAKERS

A. 8 Ohm impedance and integral matching transformer. 225 mm (8-3/4 inch) by 125 mm (5 inch) backbox and 320 mm (12-5/8 inch) round baffle for flush mount. Install appropriate enclosure for surface mount installations.

B. Speakers shall have dual voltage coil rating of 25 and 70.7 Volt, 30-19 KHz, 10-ounce ceramic magnet, 25 mm (1 inch) voice coil, 199 dB axial sensitivity, 25 Watts power handling with 1/2, 1, 2, and 4 Watt taps.

C. 70.7 Volt, 1 Watt tap shall be terminated and all unused leads shall be individually safe-ended.

D. Baffle shall be finished white plastic when applicable.

PART 3 EXECUTION

3.01 CABLE

A. Speaker cables shall be run from speaker to speaker without splices.

B. Splices shall be permitted for concealed systems when the speaker is extended from the conduit system with flexible metallic conduit. The splice shall be made in the junction box from which the speaker is extended.

C. Splices, when permitted shall be soldered connections with a wire splice cap sized for the number of conductors.

3.02 FIELD TEST

A. Speakers shall be tested for proper operation, volume and clarity by connecting a music source or tone generator to each zone. Each speaker shall then be inspected.

END OF SECTION

SECTION 16780

CLOSED CIRCUIT TELEVISION

PART 1 GENERAL

1.01 DESCRIPTION

A. Work included in this section: Materials, equipment, fabrication, installation, and tests for the following:

1. Cameras
2. Video Monitors
3. Cables

B. Related Work in Other Sections:

1. Interfacing of communication systems, Division No. 16.

PART 2 PRODUCTS

2.01 CAMERAS AND APPURTENANCES

A. Fixed Position Cameras

1. Camera:

a. Fixed position color cameras shall be a single interline transfer CCD with matrix filter, 6.4 x 4.8 mm image area, auto iris, 75 ohm BNC video output, NTSC (60 Hz) resolution and synchronization, 12 VDC power, and 3.7 mm lens.

b. Manufacturer: Cohu 1310 Series High Performance Color CCD Camera Model No. 1322-2000/3.7, no substitutions.

2. Mounting Device:

a. Low profile ceiling enclosure designed for use with solid-state CCD cameras. Suitable for installation in fixed or drop ceilings. Fully riveted, plenum rated back box with vacuum-formed, eggshell white, ABS plastic lower portion and abrasion resistant acrylic viewing window. Adjustable camera sled capable of supporting a maximum weight of 4.5 kg (10 lbs.).

b. Manufacturer: Cohu Low Profile Ceiling Enclosure Model No. EH2100P, no substitutions.

B. Moveable Cameras

1. Camera:

    a. Pan / Tilt / Zoom color cameras shall be a single interline transfer CCD with matrix filter, 75 ohm BNC video output, NTSC (60 Hz) resolution and synchronization, 10X zoom lens, 24 VAC power with 120 VAC separate power supply. Operator shall have 200 degree/sec pan speed with 360 degree range, 60 degree/sec tilt speed with 90 degree range down from horizontal, and spring loaded quick disconnect mechanical coupling. Housing shall be thermoformed optical acrylic with low-light loss viewing slot with plenum rated steel upper box and mount.

    b. Manufacturer: American Dynamics Cobra Dome Series Model No. AD1273/C10C with AD124 24 VAC power supply and AD1273/DC drop ceiling kit, when applicable, no substitutions.

2.02 VIDEO MONITORS AND APPURTENANCES

A. Console Security Monitors

1. Console security monitors shall be 120 VAC, 60 Hz, 250 mm (10 inch) diagonal picture tube with 300 lines horizontal resolution. The monitor shall minimize the loss of color resolution and luminance detail by using a comb filter for chroma separation and have a 75 ohm automatic termination for line inputs. The rear of the monitor shall contain video in and out BNC connectors. All controls shall be front mounted. The monitor shall be enclosed in a metal cabinet with a magnetic ring shield and be furnished with factory brackets for mounting in a standard EIA 500 mm (19 inch) rack.

2. Manufacturer: Panasonic CCTV Color Monitor Model No. ST-1000M with BA-100 rack mounting brackets, no substitutions.

B. Video Switching Control

1. Keyboard shall have one, three, or five monitor selection, 999 cameras callable, numeric keys with variable speed, monitor key, alarm key, and switcher key. 120 VAC, 60 Hz with one, 8 pin modular RJ-45 jack, 1200 baud.

2. Manufacturer: American Dynamics Keyboard for AD matrix switcher / control systems Model No. AD2078R-PT, no substitutions.

2.03 CABLE

A. Video Cable

1. Camera video signals shall be transmitted via the fiber optic communication system. Furnish and install all cabling and devices in compliance with specification section 16742 with the following exceptions:

    a. Video cable shall be RG59/U coaxial cable with .5 mm2 (#20 AWG) bare solid copper center conductor, 95% bare copper braid shield, 75 Ohm impedance, and BNC terminations at both ends. The outer jacketing on the cable shall be compatible with the environment in which it is being installed.

    b. All wall mounted BNC connectors shall be housed in an ivory colored wall plate intended for the application.

B. Control Cable

1. Camera control signals shall be transmitted via the fiber optic communication system. Furnish and install all cabling and devices in compliance with specification section 16742 with the following exceptions:

    a. Control cable shall be Belden 8760 or equivalent.

    b. All wall mounted connectors shall be housed in an ivory colored wall plate intended for the application.

PART 3 EXECUTION

3.01 CAMERAS

A. Install all cameras and appurtenances as shown in the Contract Documents.

3.02 VIDEO MONITORS

A. Install all video monitors as shown in the Contract Documents.

3.03 CABLES

A. Cables shall be installed in continuous lengths without splices from device to device with all cables labeled appropriately.

B. Video cables shall be terminated and connected at all camera and monitor locations. Adequate cable length shall be left at the terminal of the fiber optic system equipment racks for termination and connection by Sandia.

C. Control cables shall be left unterminated. Adequate cable length shall be left at the device and terminal of the fiber optic system equipment racks for termination and connection by Sandia.

3.04 FIELD TESTS

A. All wiring shall be tested successfully for continuity.

B. All cameras and monitors shall be field tested in the presence of the SDR and adjusted until they are aligned and operating properly.

END OF SECTION