A 2 Mega Gauss Magnetic Field Driver for Cluster Fusion Experiments

SEERI Student Presentations

August 12, 2009

SAND2009-6970C

Presented by Caleb Waugh

Advised by Ken Struve

Sandia is a multiprogram laboratory operated by Sandia Corporation, a Lockheed Martin Company, for the United States Department of Energy's National Nuclear Security Administration under contract DE-AC04-94AL85000.

Introduction

- Hometown: Grand Junction, CO
- Undergraduate: Electrical Engineering, Philosophy (Brigham Young University)
- Graduate: Plasma Physics and Technology Policy (MIT)
- Third year as a Sandia intern
- Previous projects included: An Automated Debubbler for ZR, A Transmission Line Circuit Model for ZR

Sandia National Laboratories

Introduction to Cluster Fusion

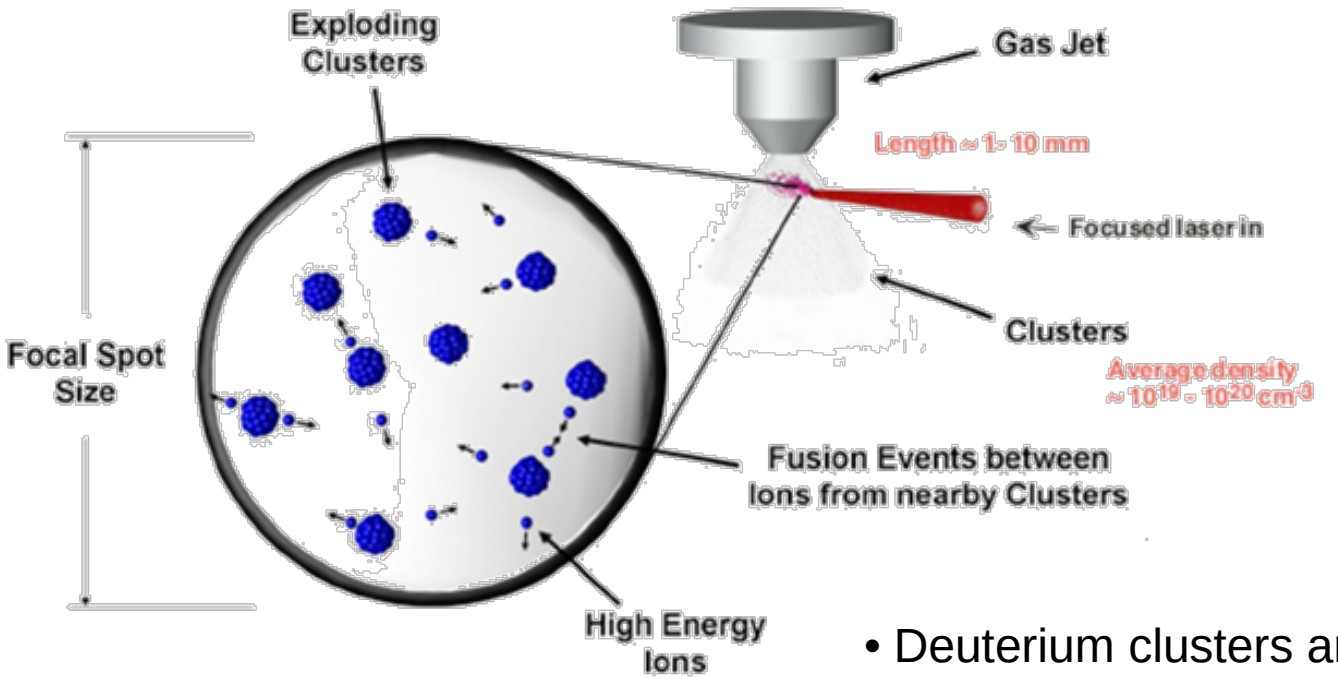

Relevant fusion reactions:

$D + D \rightarrow He^3$ (0.82 MeV) + n (2.45 MeV)

$D + T \rightarrow He^4$ (3.5 MeV) + n (14.1 MeV)

- Deuterium clusters are ionized by a femto-second laser to produce a high temperature, high density plasma

Sandia National Laboratories

The Need for Pulsed Power

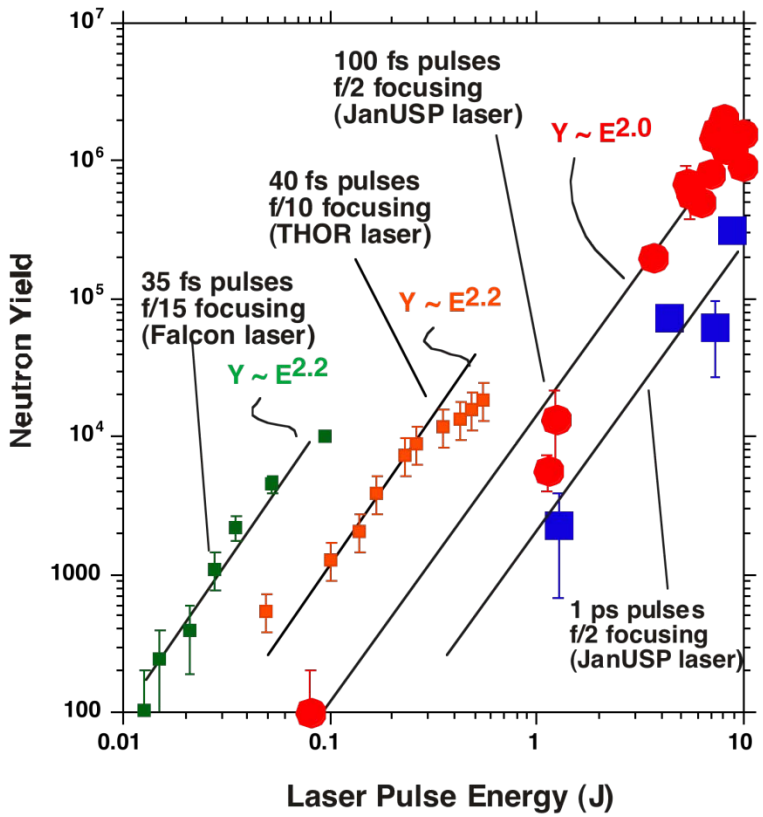

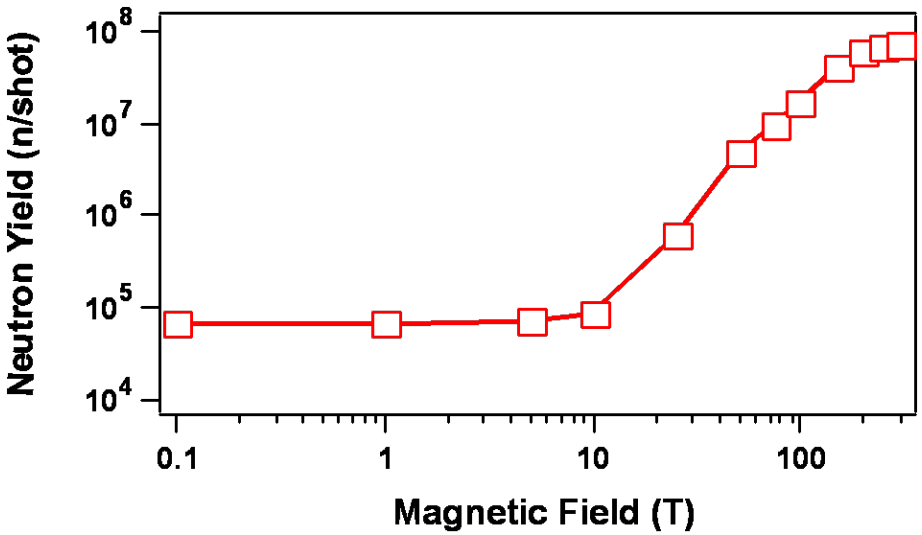

- In the presence of a magnetic field the ions are confined and the neutron yield (fusion) increases by almost an order of three.

Sandia National Laboratories

A Coupled Laser Pulsed Power Approach

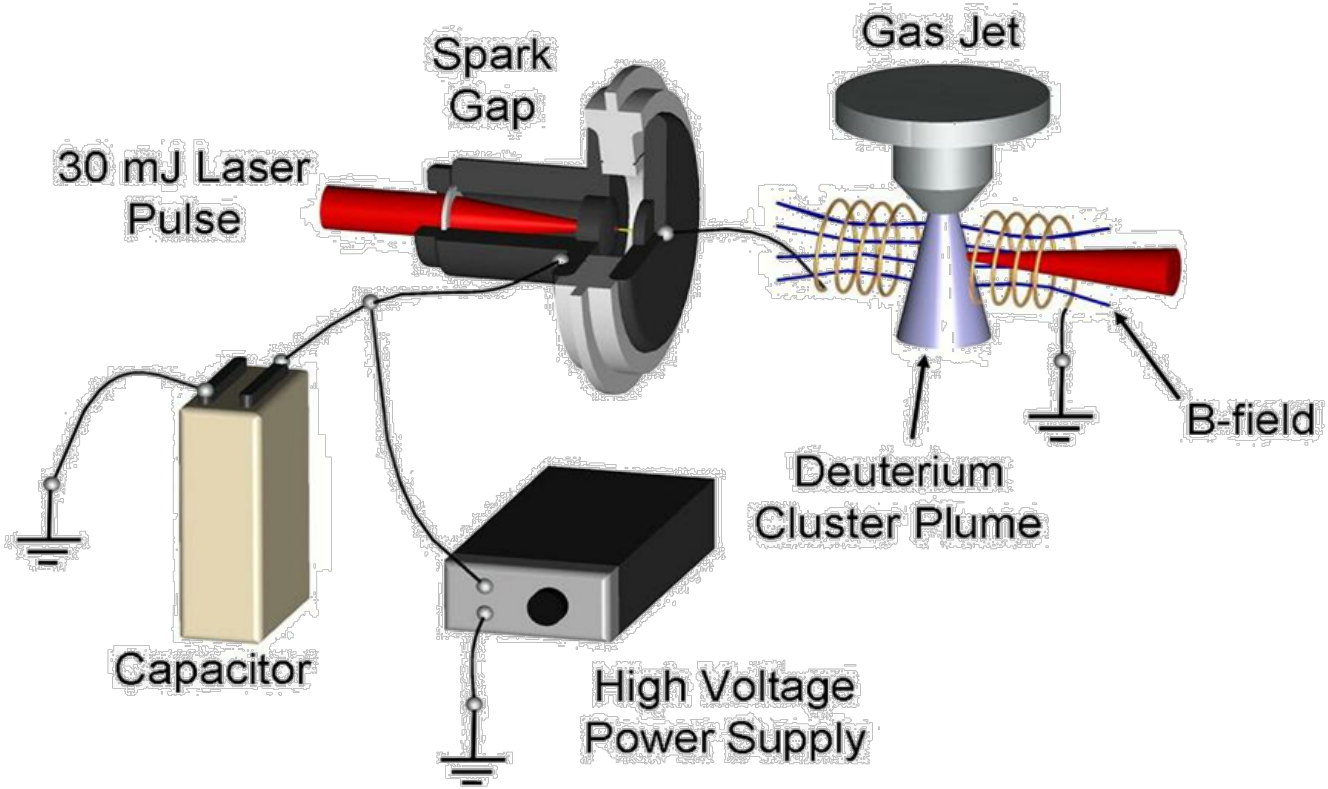

- Sandia will provide the pulsed power components
- The University of Texas will provide the laser and cluster fusion components

Sandia National Laboratories

Magnetic Fields In Coils Are Very High

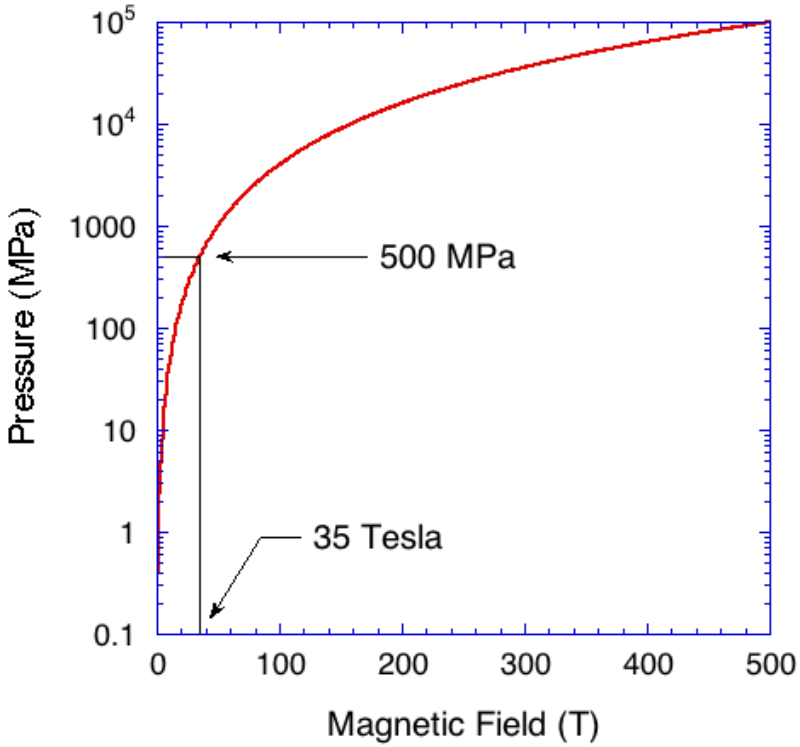

Coil Before Shot

Coil After Shot

- A 2 MA pulse will produce a 200T field in a 1cm loop and will also exert a pressure on the inside of the loop of around 10^4 MPa (over 1.4 million psi)

Sandia National Laboratories

Proposed Magnetic Coil Driver

Capacitor with Gap Switch

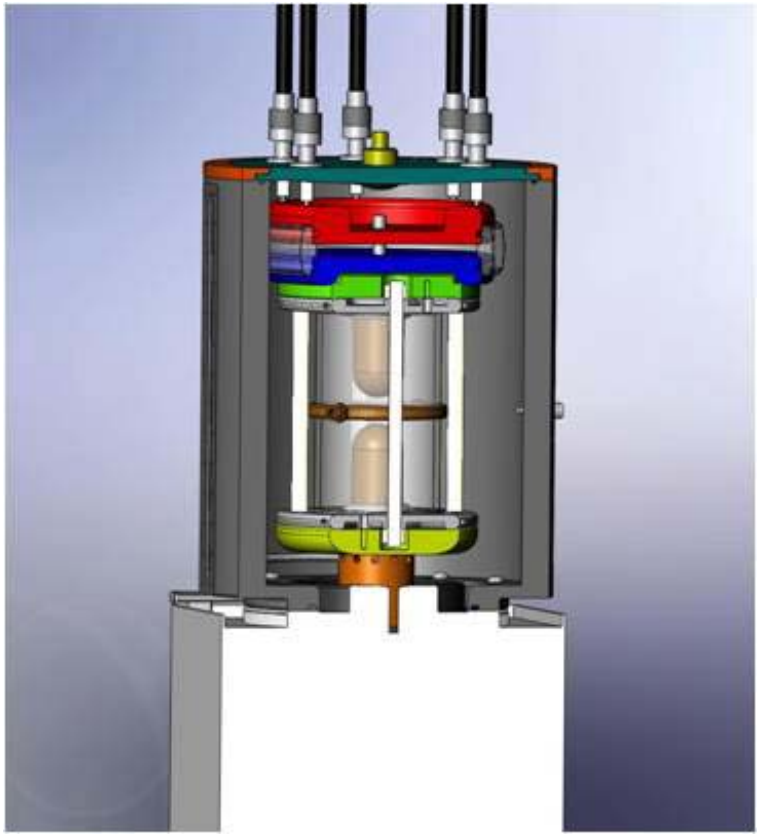

Vacuum Chamber with Coil

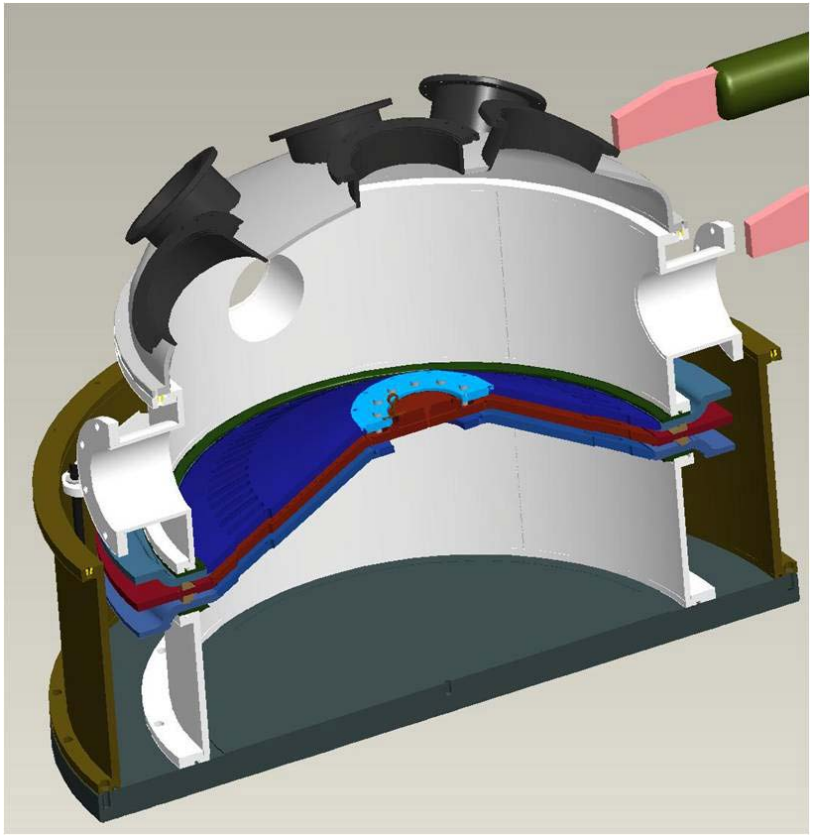

Proposed Magnetic Coil Driver

- Since each capacitor and can will only supply 200kA, 10 modules will be needed to supply the 2MA required
- The coil will be mounted on a MITL configuration similar to the one on Z
- Current will be carried from cables from the can to the coil

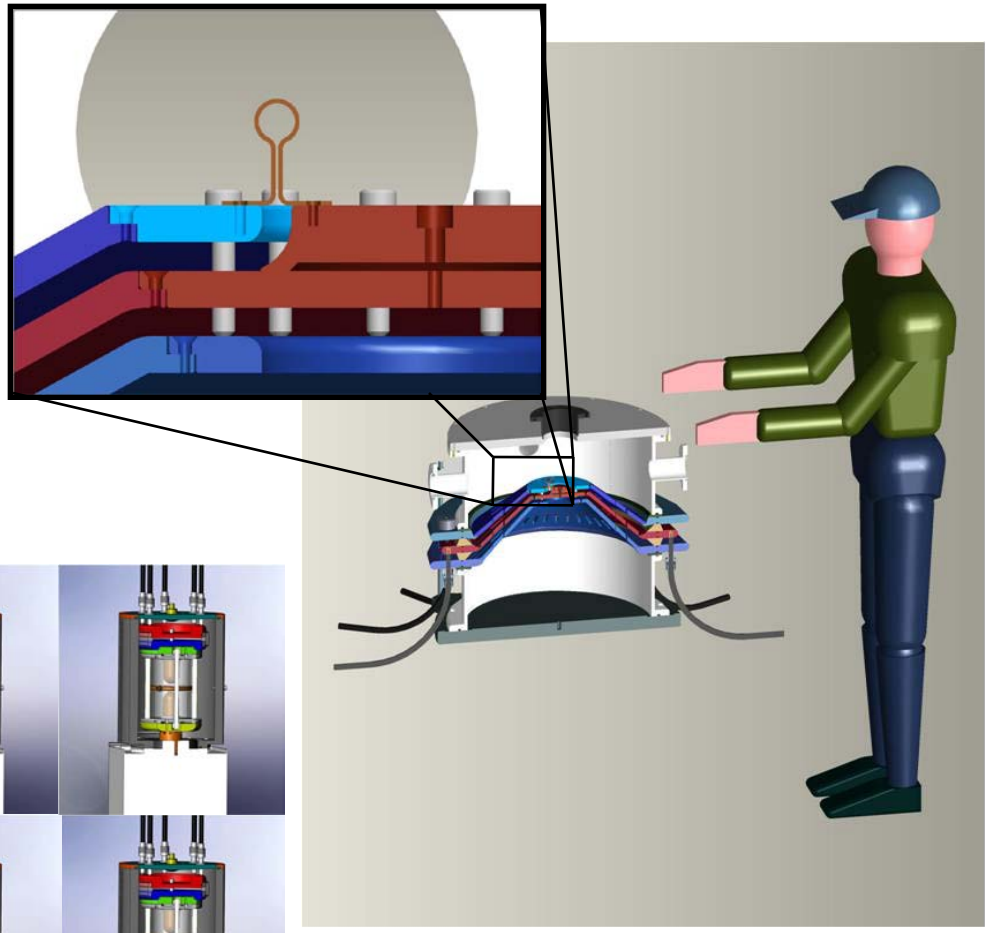

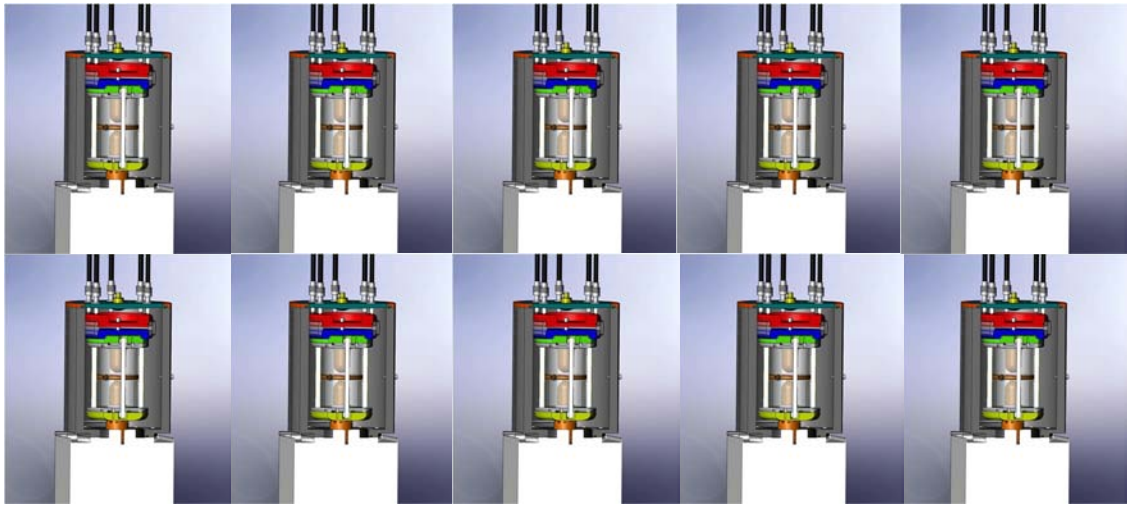

Sandia National Laboratories

Personal Project Responsibilities

- Verify the circuit models to ensure the 2MA driving current will be met
- Design support systems for the 2MA driver
  - Design pressure system for the spark gap switches
  - Design assembly for support hardware (power supply, switch trigger generator, data acquisition, automated controls)
  - Design an automated control system
- Build!

Electromagentic Circuit Parameter Modeling

Dimensions from Solid Works Drawings

Drawing and Simulations run in Electro

Detailed Circuit Parameters for Transmission Line Model

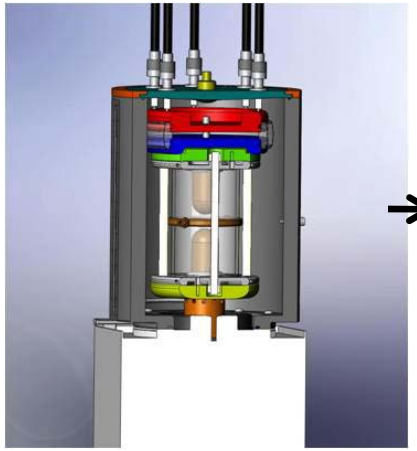

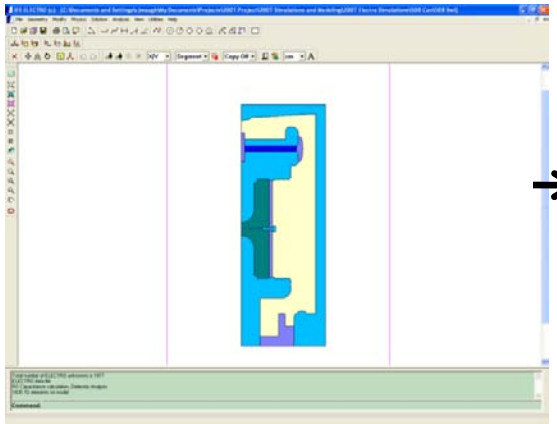

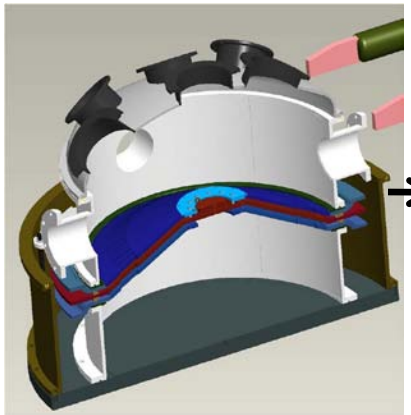

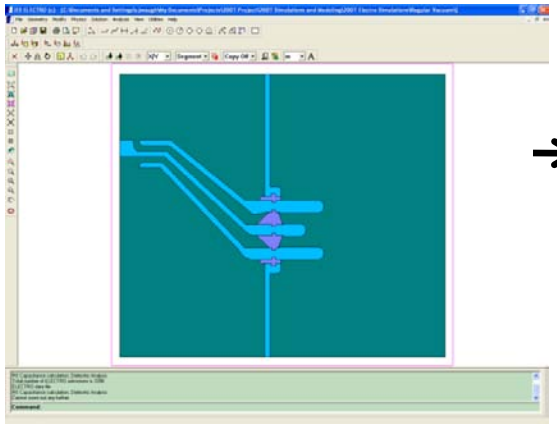

200T Pulsed Coil Driver

Element	Section	Capacitance (F)	Length (m)	Dielectric	Length (ns)	Impedance Z (Ω)	Inductance (H)
1	Ccap	3.10E-06			1.00E-02		
2	Lcap				1.00E-02		4.00E-08
3	Z1	4.07E-11	0.124	Oil	0.61	15.08	9.25401E-09
4	Z2	1.81E-12	0.0935	C	0.31	172.75	5.3893E-08
5	ZGap		0.0268	C	0.09	204.65	1.83E-08
6	Z3	1.78E-12	0.0935	C	0.31	175.66	5.48033E-08
7	Z4	3.61E-11	0.107	Oil	0.53	14.67	7.76475E-09
9	ZCableFeed				1.00E-02	1.00	1E-11
11	ZRing	8.70E-11	0.0363	C	0.12	1.39	1.6865E-10
12	Zinsulator	1.60E-10	0.0405	C	0.14	0.84	1.1407E-10
13	ZMITL	1.98E-10	0.1885	C	0.63	3.18	1.99744E-09
14	ZCenter	3.07E-11	0.0748	C	0.25	8.14	2.03176E-09
15	LCoil						9.65E-09

Calculations		
Total Length (ns):	3.021	
Total Length (m):	0.340	
Total Capacitance (F):	4.758E-10	
Total Inductance (H):	6.300E-07	
Vcharge	95000.00	V
Tswitch	100.00	ns
Rcan	0.10	Ω
Rstack	1.00E-01	Ω
RLoad	1.00E-03	Ω
RCStack	1.00E+08	Ω
Cstack	1.00E+00	nF

Sandia National Laboratories

Transmission Line Circuit Code Modeling

Complete 10 Cap Transmission Line Model in Bertha

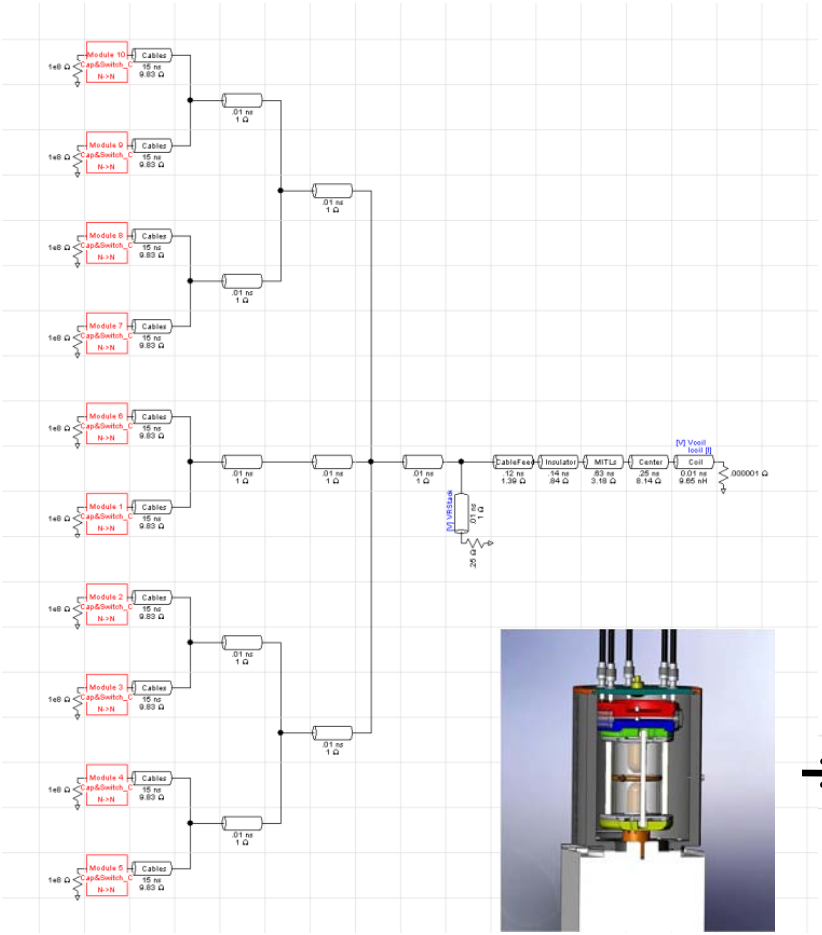

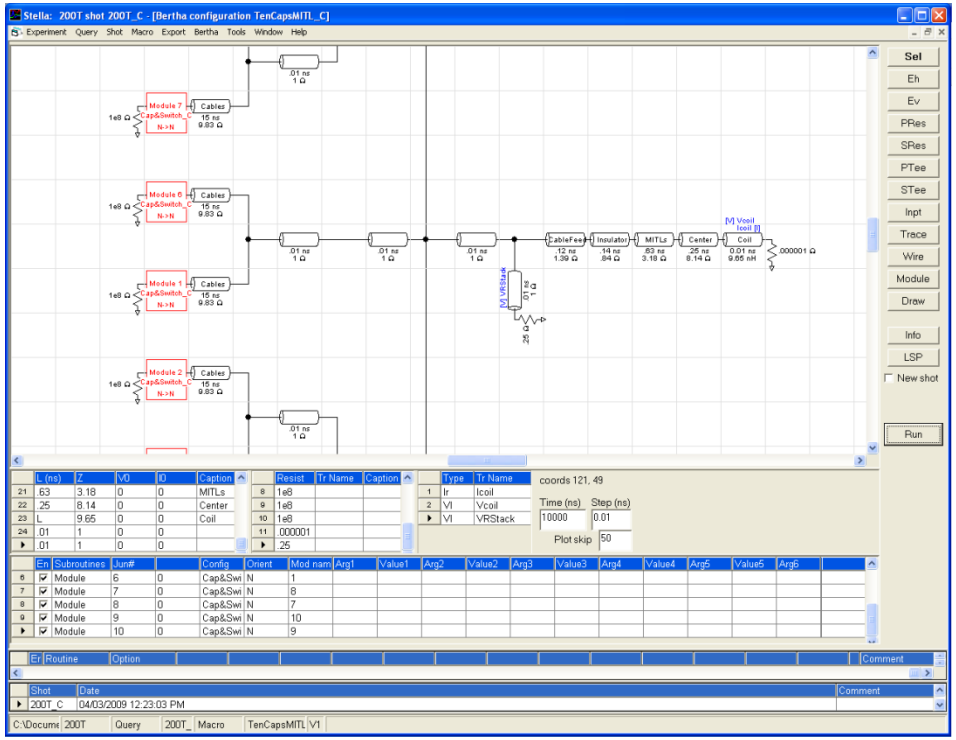

Bertha Model of the Cap. and Switch

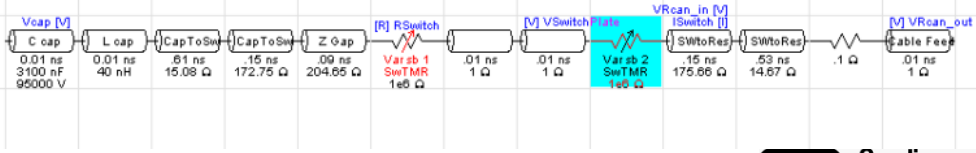

Sandia National Laboratories

Simulation vs. Calculations

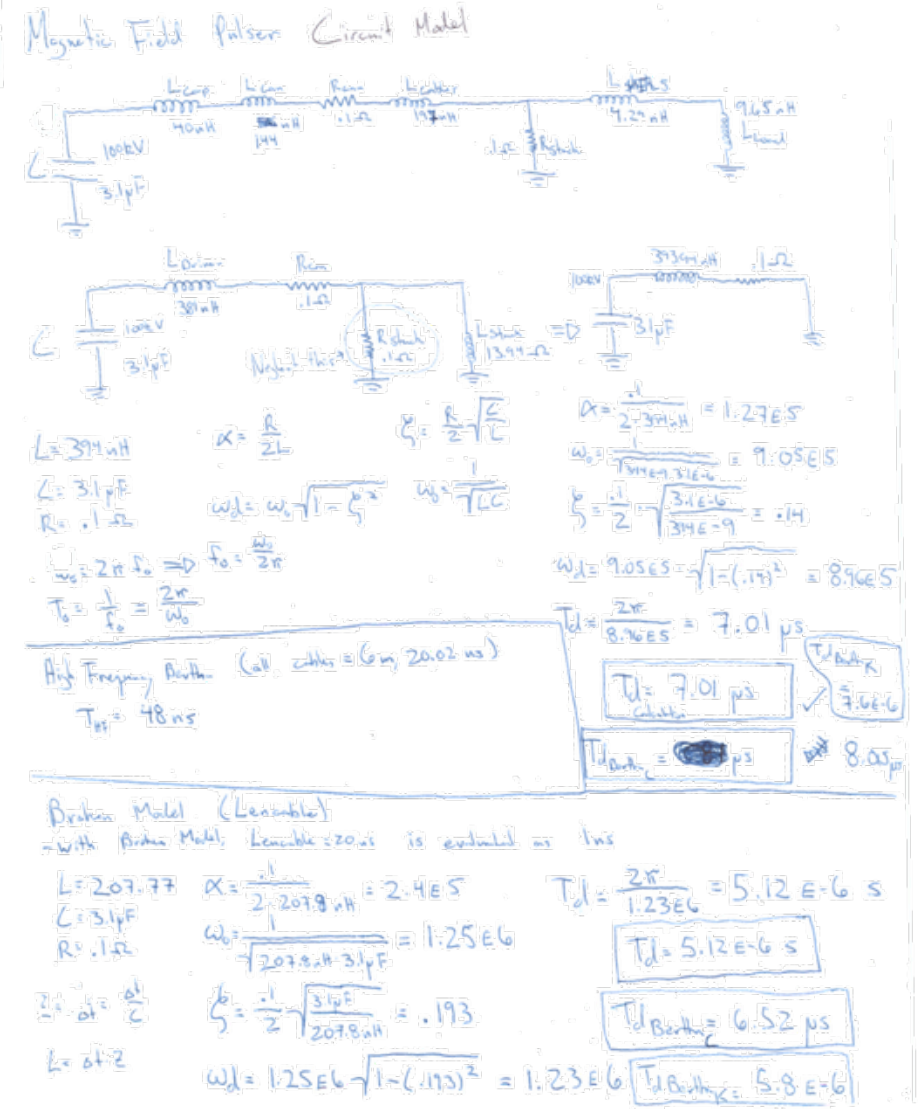

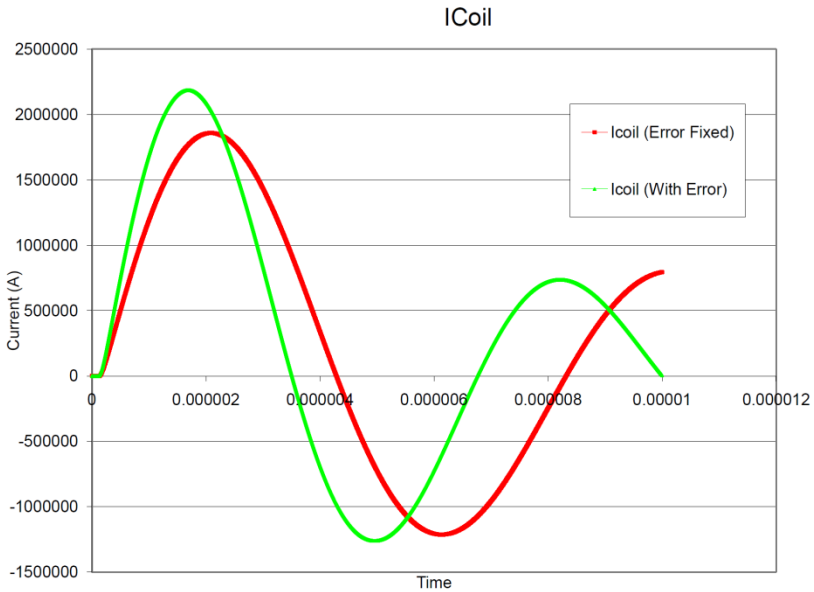

- Initially the models were inconsistent
- Further work (i.e. a week of banging my head against a wall) revealed a glitch in the Bertha code that was neglecting the inductance of the cables
- The actual current was around 1.85MA!
- Lesson: don't be overly dependent on modeling

Sandia National Laboratories

Pressure System Design

- The spark gap switches are pressurized to increase breakdown hold-off
- Firing the switches releases small particulate that must immediately purged (accumulation of particulate can increase probability of self breakdown)
- Breakdown voltage is a function of switch pressure, so pressure must be regulated

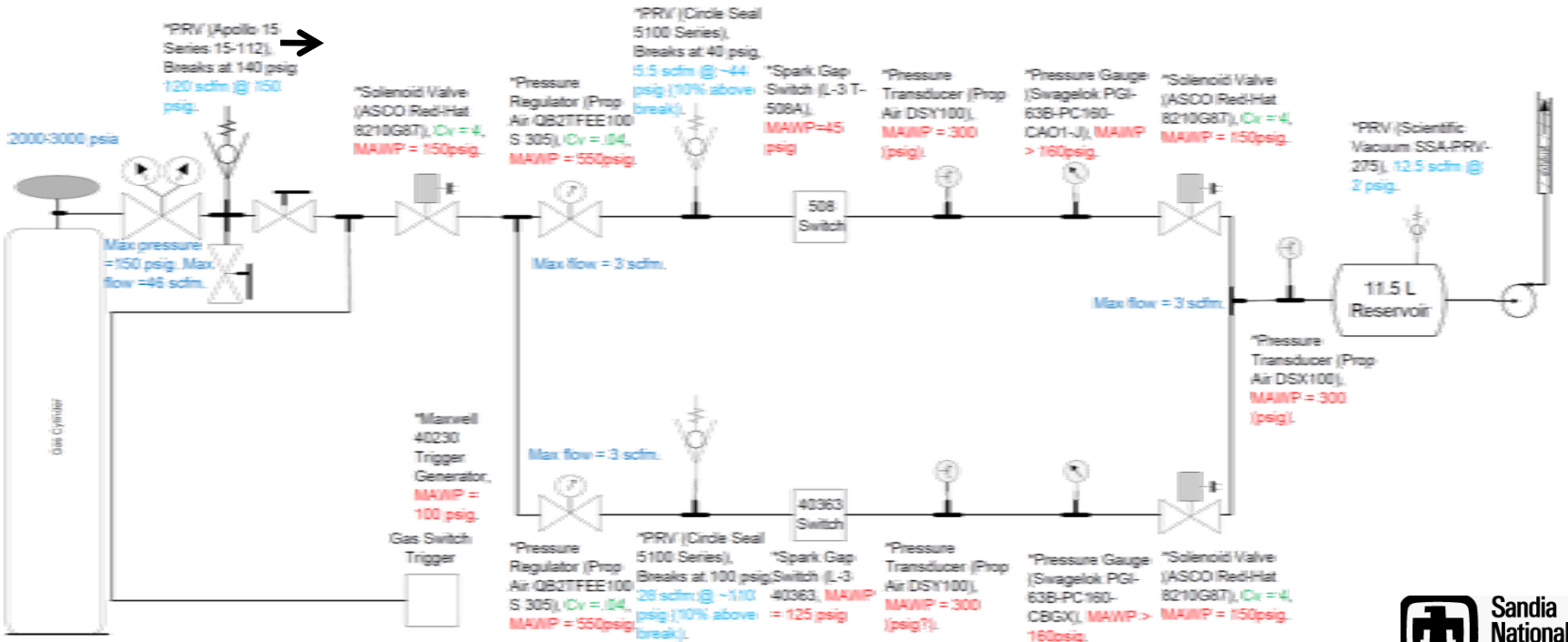

Sandia National Laboratories

Seven Weeks Later…….

Fully Automated Control System for Driver

- The final design enclosed all the supporting hardware (excluding caps and cans) in a single rack with all components controlled through a single Ethernet cable through LabVIEW.

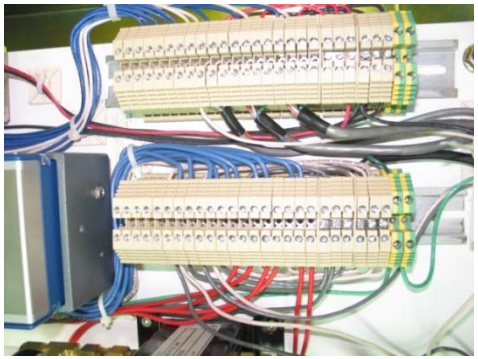

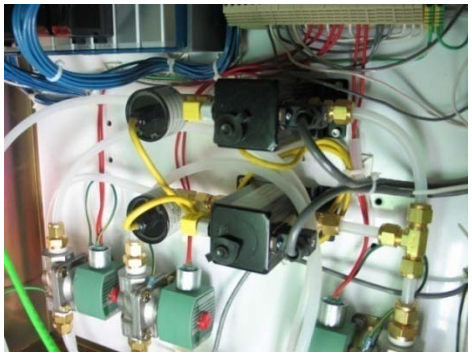

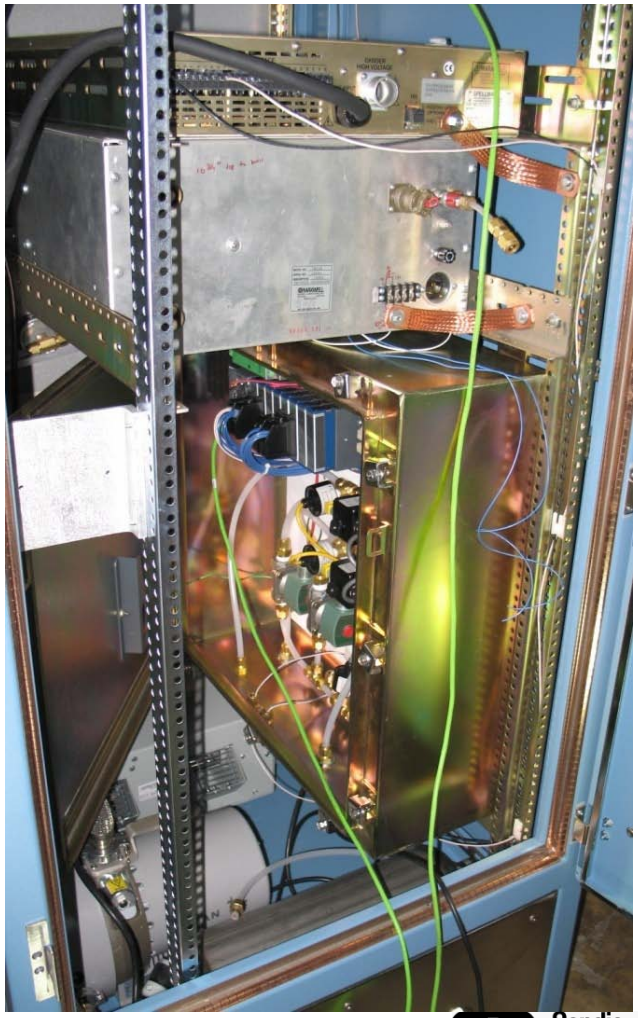

Sandia National Laboratories

Self-contained Magnetic Field Driver

Sandia National Laboratories

Recognition

- Special thanks to: Brian Stoltzfus, Decker Spencer, Don Petmecky, Dr. Pepper, Jeff Argo, Jeff Georgeson, Michael Jones, Air Conditioning (it wasn't working for part of July), Jerry Mills, Mountain Dew, Ray Mock, Bill Fowler, and Franklin Orndorff-Plunkett.

Questions?

Sandia National Laboratories