Photonic Displacement Interferometry (PDI)

August 12, 2009

Leandra Boucheron
Mentor: Scott Jones

Sandia is a multiprogram laboratory operated by Sandia Corporation, a Lockheed Martin Company, for the United States Department of Energy's National Nuclear Security Administration under contract DE-AC04-94AL85000.

Introduction

- **Problem: How do you measure material response to radiation pulses?**
  - **Constraints**
    - **Sample disturbance**
    - **Electromagnetic noise**

- **Solution: Photonic Displacement Interferometry**
  - **Summary of technique**
  - **Advantages**

Interference of Light

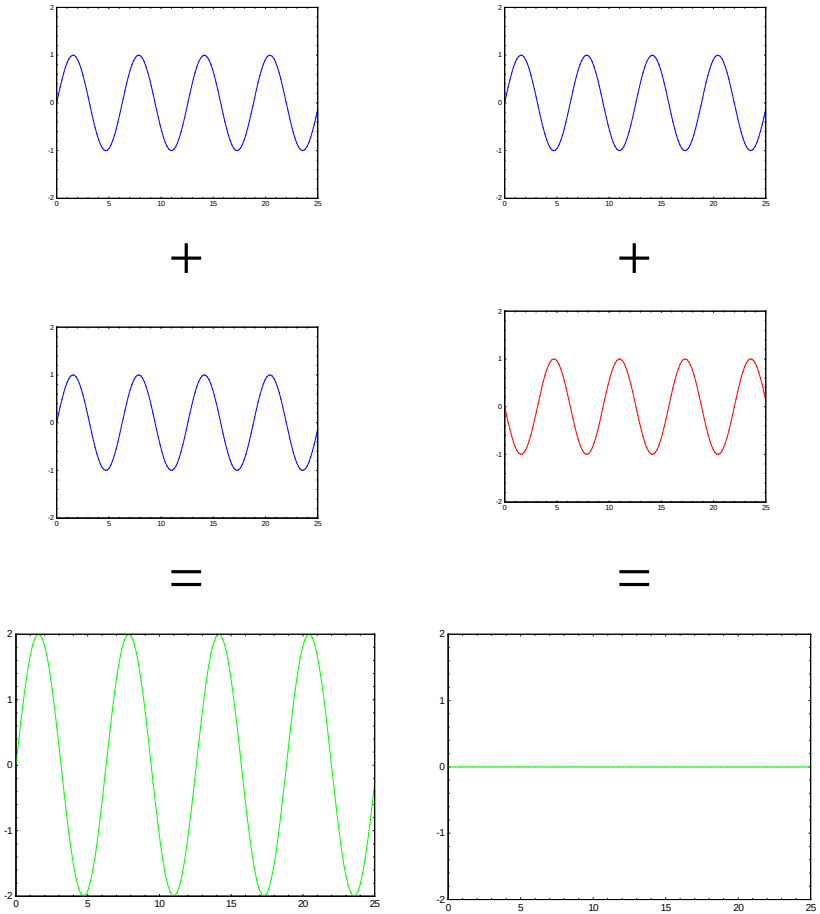

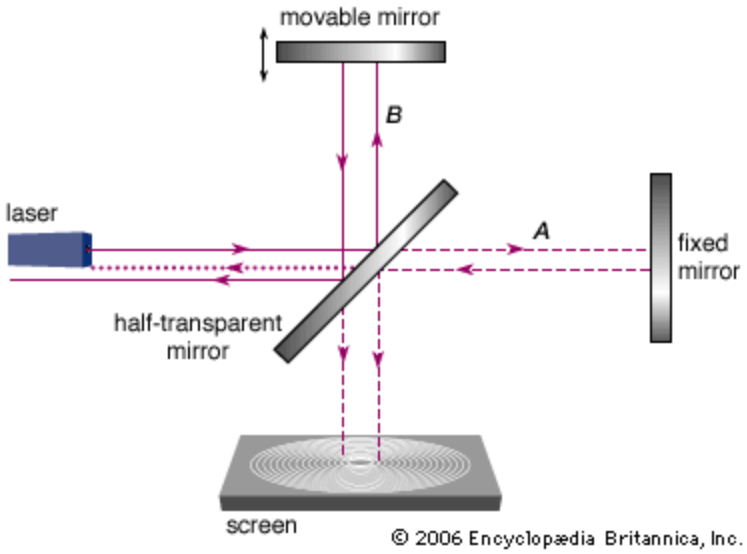

System Basics

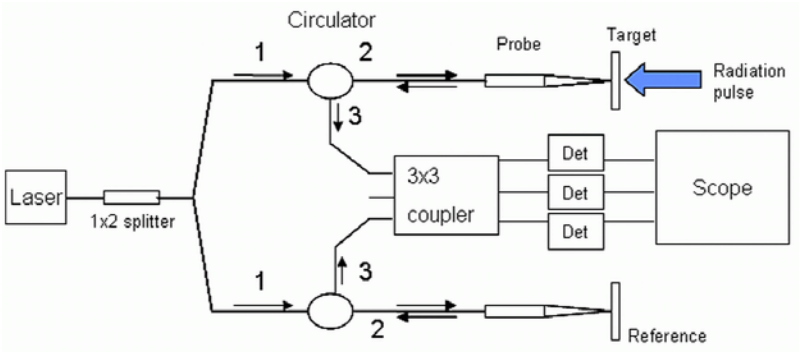

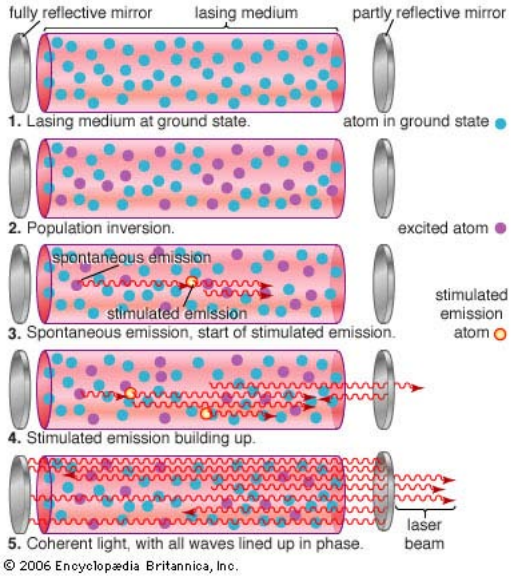

Reference and Shifted Beams

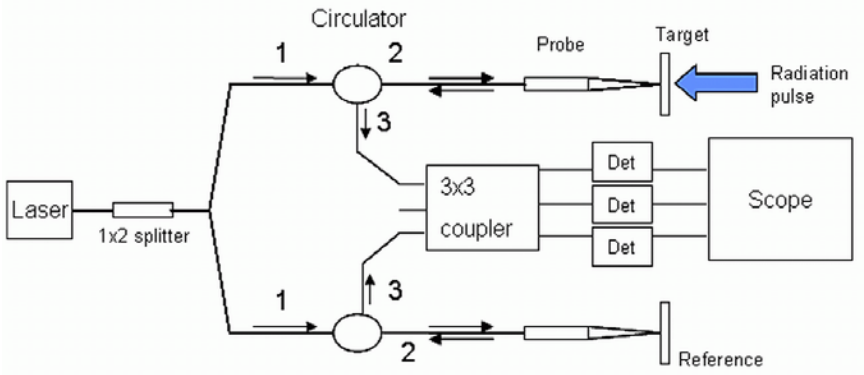

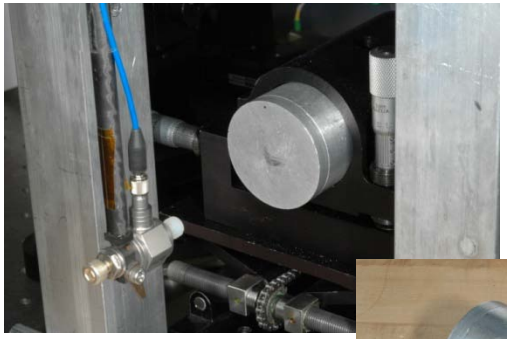

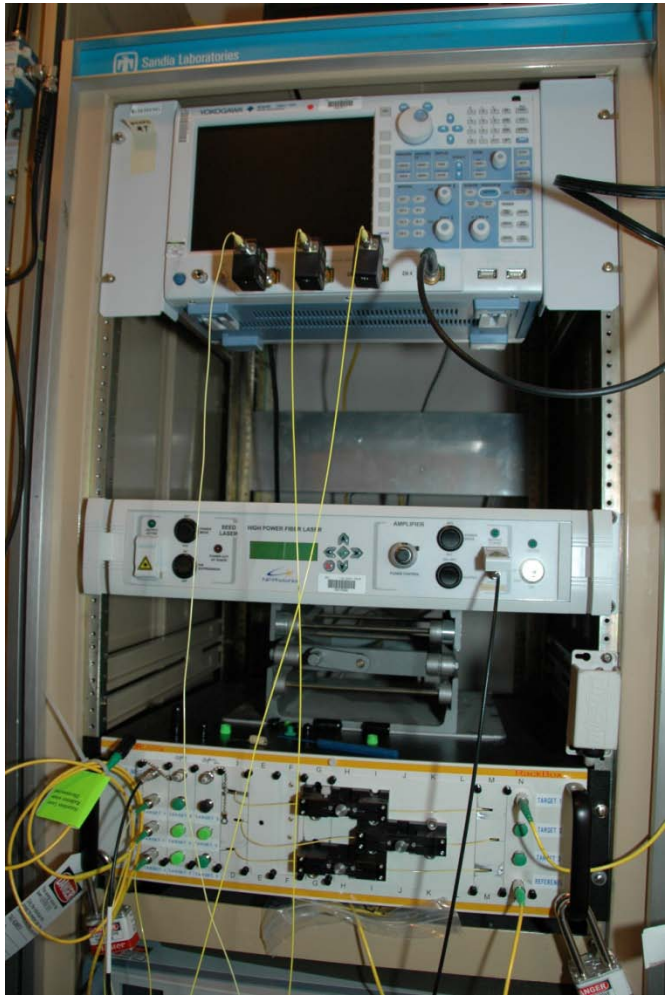

3X3 Coupler

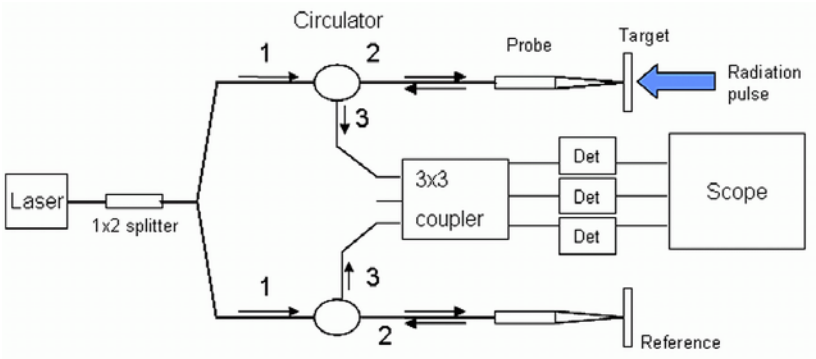
Circulator
1
2
3
Probe
Target
Radiation pulse
Laser
1x2 splitter
3x3 coupler
Det
Det
Det
Scope
1
3
2
Reference

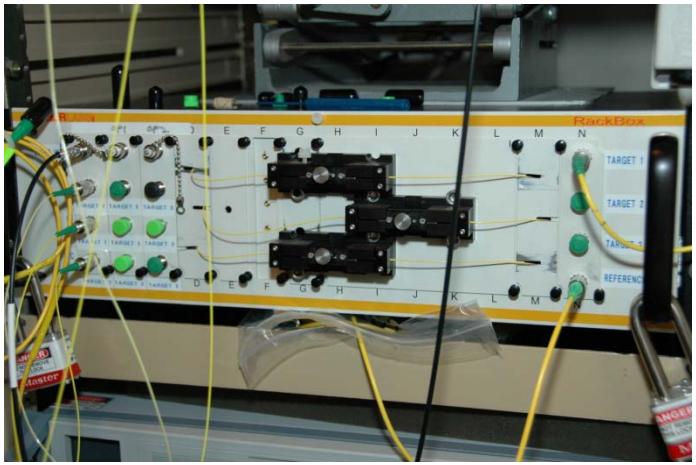

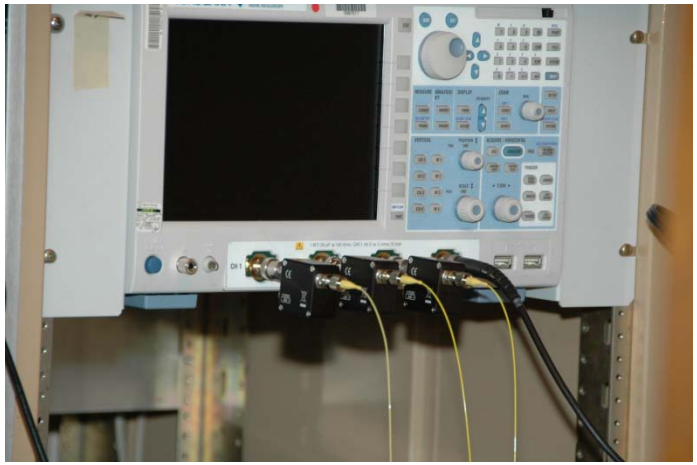

Coupler Output

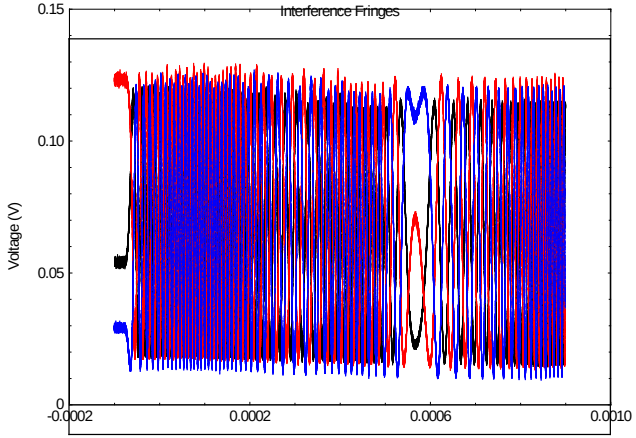

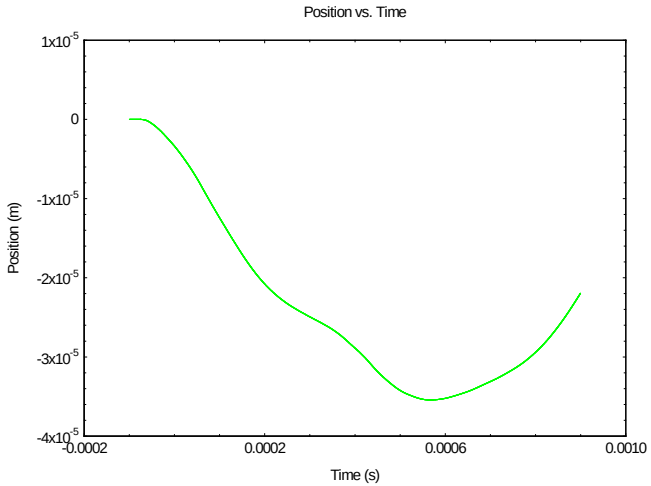

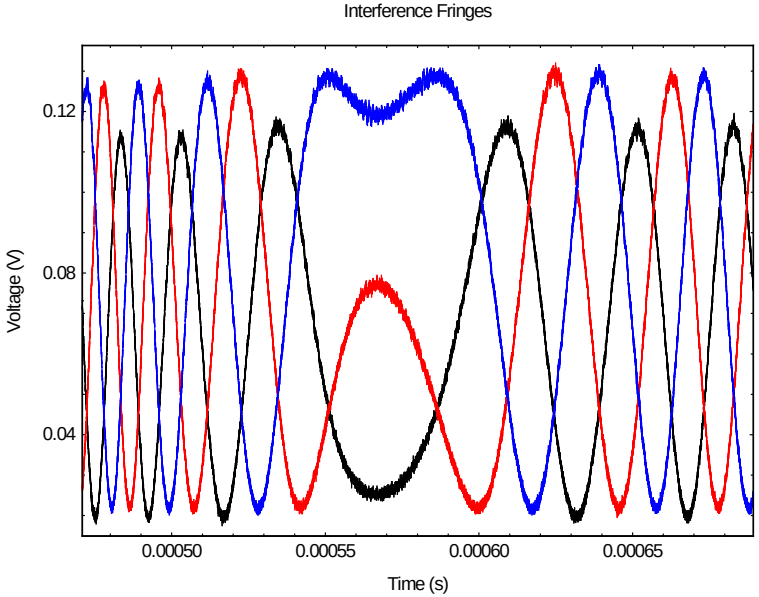

Data Analysis

- **THRIVE (Three Interferometer Velocimetry) Program**

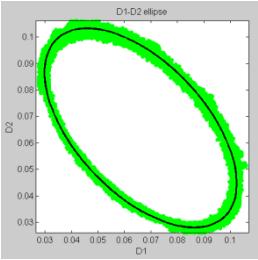

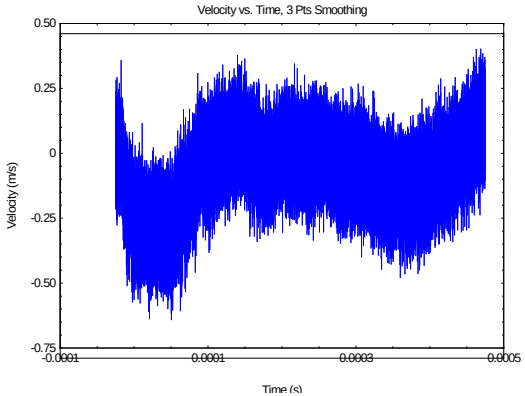

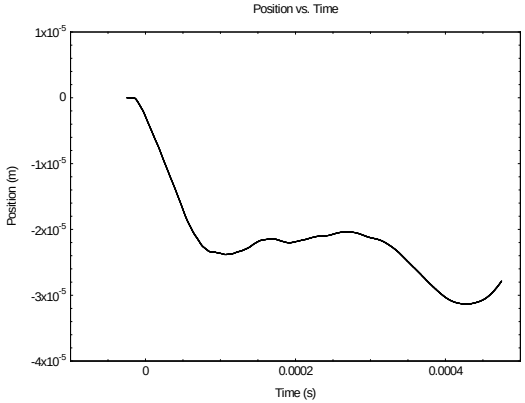

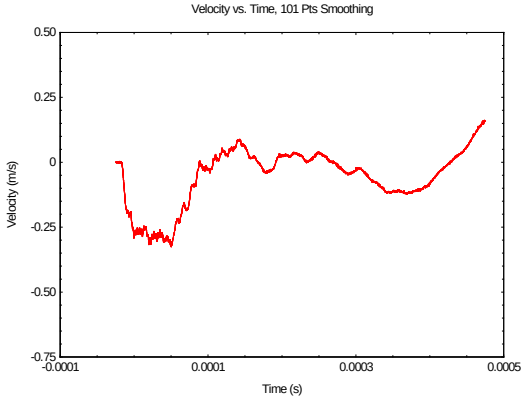

Conclusion
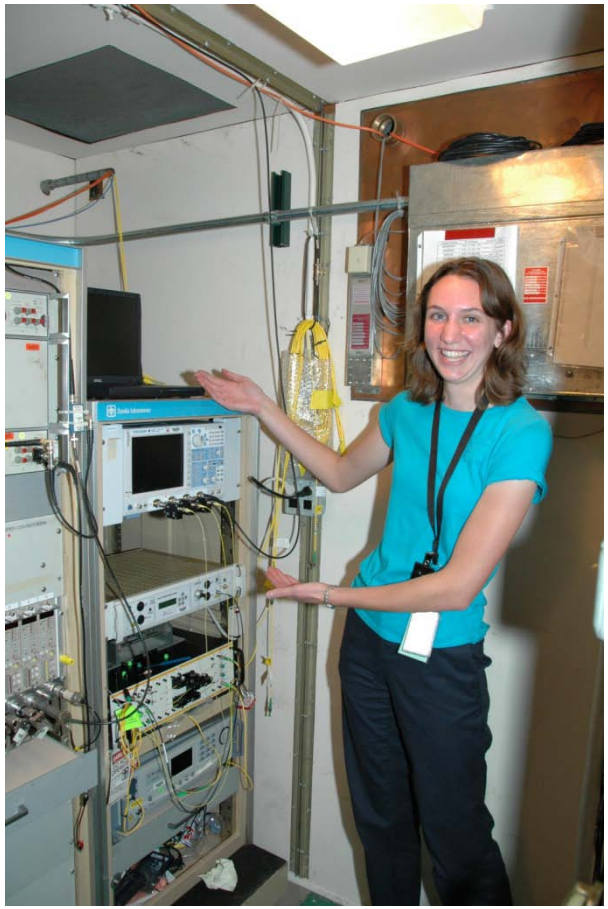
- PDI Overview
- Questions?