Center for Shock Wave-Processing of Advanced Reactive Materials (C-SWARM)

University of Notre Dame

PI, Director: Samuel Paolucci (paolucci@nd.edu); Co-Director: Karel Matouš (kmatous@nd.edu)

The goal of the C-SWARM Single-Discipline Center is to predict the behavior of heterogeneous materials, specifically the dynamics of their shock induced chemo-thermo-mechanical transformations and resulting material properties. The C-SWARM research is devoted to the development of a parallel multiscale and multiphysics computational framework for predictive science using models that are verified and validated (V&V) with uncertainty quantification (UQ). Such research resonates well with the mission of the NNSA national laboratories. Through adaptive exascale simulations, C-SWARM's goals are to predict conditions for the synthesis of novel materials and provide prognoses of non-equilibrium structures that will form under shock wave processing. In particular, researchers at C-SWARM plan to identify conditions under which they can synthesize cubic boron nitride (c-BN). c-BN is not found in nature and therefore can only be produced synthetically. The hardness of c-BN is inferior only to diamond, but its thermal and chemical stability are superior. Because of these properties, c-BN surpasses diamond in high temperature mechanical applications. Shock synthesis of c-BN enabled by exascale predictive computations with V&V/UQ would be a significant scientific achievement. During the first seven months of work, the C-SWARM is supporting seven U.S. graduate PhD students.

"Working on such a complex multidisciplinary problem would not have happened without the sustained support from NNSA," said Samuel Paolucci, Professor of Aerospace and Mechanical Engineering and the project's director. "Our students and research staff benefit greatly from working on a difficult problem that requires an interdisciplinary approach in conjunction with high-performance computing," he added.

To model such materials, C-SWARM employs an adaptive multiscale and multi-time strategy that solves in adaptive fashion macro-continuum equations using an Eulerian algorithm with constitutive equations locally provided by well-resolved micro-continuum simulations using a Lagrangian algorithm (see Figure 1). C-SWARM takes advantage of the instantaneous localization knowledge of those regions where detailed simulations are necessary. In the last calendar year, researchers of the Computational Physics team have focused on establishing data-driven material modeling concepts, enhancing micro- and macro-continuum solvers, and developing enabling software technologies.

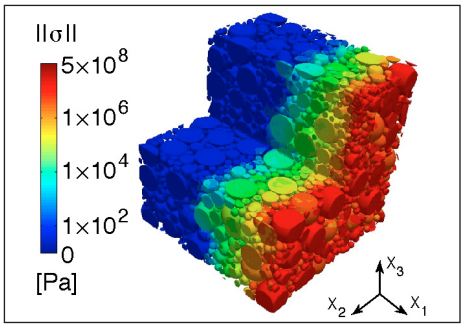

Figure 1. Shock propagation in the heterogeneous hyper-elastic material. Effective stress field after t = 1.1 nanoseconds in a material sample of aluminum (Al) and nickel (Ni) particles with diameters of 100 microns (Ni), 50 and 25 microns (Al). A material sample of 1 mm x 1 mm x 1 mm is impacted by strike velocity of 100 m/s in the negative x1 direction. Number of computational cells is ~18 million and simulation was performed on 1,024 computing cores at C-SWARM using the micro-continuum solver, PGFem3D. The cut portion of the cube is removed to see inside. The Ni particles are spheres of 100 microns in diameter. Disks (two-dimesional (2D) objects) are created once the spherical particles (3D objects) are cut.

The macro- and micro-continuum codes will utilize an advanced execution model, ParalleX, and its execution runtime system HPX. ParalleX/HPX enables data mining of runtime information to dynamically adapt the codes' demands to resource availability. Furthermore, Active System Libraries (ASLib) will be developed to ensure that the macro- and micro-continuum algorithms can be represented in an effective and hardware-independent fashion (see Figure 2). In the last calendar year, researchers of the Computer Science team have focused on the analysis of existing MPI-based codes, advancing the development of HPX, delineation of the software stack, and formulating a Domain-specific embedded language (DSeL).

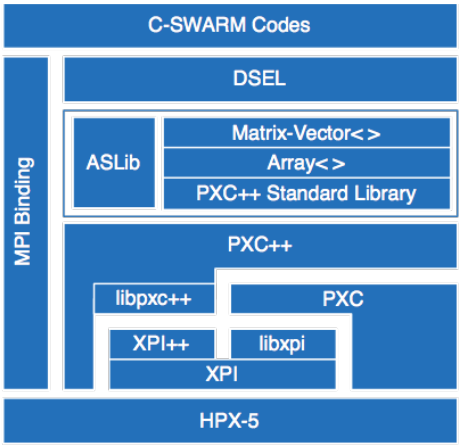

Figure 2. C-SWARM software stack showing different layers of software being develop as part of the C-SWARM project. The top layer are C-SWARM scientific codes. Under the C-SWARM scientific codes is a layer of advanced software libraries and programing languages. Under this layers is a layer of libraries related to runtime system (HPX). The last layer is the runtime system HPX-5 that is being developed and used to run the parallel exascale applications.

The integrated V&V/UQ program provides a platform for computational model verification, validation and propagation of uncertainties. The emphasis of C-SWARM is on quantifying the predictive ability of the multiscale simulations in an efficient manner. The key component is a series of carefully co-designed experiments and data-driven simulations (with quantified uncertainties) to enable meaningful and rigorous comparisons of simulation predictions with experimental results. In the last calendar year, researchers of the Experimental Physics team have focused on code verification, materials characterization and calibration of material data, as well as on validation experiments, and micro-, micro- to macro-, and macroscale tests.

On the educational side, research performed in C-SWARM provides a unique setting for the multidisciplinary education of students, postdoctoral scholars, and research staff to join the workforce in critically important areas of national importance.