Depolarization measurements of biological aerosols for standoff detection

by ***R. L. Schmitt, S. M. Sickafoose, M. S. Johnson, and P. J. Hargis, Jr.***

Motivation—LIDAR (Light Detection and Ranging) systems are now a key component in the DoD strategy to protect troops from biological weapons in the battlefield. Although UV laser induced fluorescence LIDAR systems have been quite successful in detecting and discriminating biological aerosols at ranges exceeding 3 km, these systems sometimes confuse diesel smoke with weakly fluorescing biological aerosols. In order to reduce the false alarm rate due to diesel smoke, LIDAR systems are now exploiting the depolarization of the elastically scattered laser light as an additional factor to aid in discrimination. To optimally use this new information in discrimination algorithms, calibrated measurements of the depolarization ratio for a wide variety of relevant biological and non-biological aerosols are needed.

Accomplishment—Since the size, shape, and composition of biological particles (cells and spores) are markedly different than diesel smoke (soot particles), the depolarization of backscattered light from these particles should be different. For example, a spore which is oblong in shape will tend to depolarize scattered light whereas a spherical soot particle will not.

We modified the Sandia B70 LIDAR trailer to measure elastic backscatter depolarization ratios at 355 nm and 1064 nm, and used the enhanced system to measure depolarization ratios of a variety of aerosol clouds at a range of 1.2 km. The measurements were made during several field test campaigns conducted at Dugway Proving Ground.

A schematic diagram of the B70 LIDAR system is shown in Figure 1. A Q-switched Nd:YAG laser produces both 1064- and 355-nm pulses which are directed towards the aerosol cloud using a series of turning mirrors. Backscattered light is collected by a large telescope, collimated, and sent to a series of detectors.

The depolarization detection system, shown in Figure 1, consists of $\lambda/2$ and $\lambda/4$ waveplates to compensate for polarization ellipticity induced by mirror reflections, a Glan-Taylor polarizer to separate the two orthogonal polarizations, a spatial filter to improve polarization purity, and a photodetector in each channel to measure the light. The 1064-nm channel uses Si Avalanche Photodiode (APD) detectors and the 355-nm channel uses photomultiplier tubes. The signals are digitized by an oscilloscope and processed to obtain the depolarization ratio as a function of time.

Figure 2 shows a subset of the measured depolarization values from agent simulants. The first four simulants are released dry, while the second four are released wet. Wet-release simulants are encased in water and appear more spherical to polarized laser radiation; with a correspondingly lower depolarization ratio.

Significance—We have made calibrated elastic backscatter depolarization measurements on a wide variety of biological aerosols and common interferents (such as diesel smoke). This database will be used to design more robust discrimination algorithms and also to design optimum receiver configurations for new standoff LIDAR systems. To properly exploit depolarization ratio in a scanning LIDAR system, one must compensate for the polarization ellipticity induced by the beam directing mirrors on both the transmitter and receiver.

Sponsors for various phases of this work include: DoD Joint Biological Standoff Detection Systems

Contact: Randy Schmitt, Lasers, Optics, and Remote Sensing, Dept. 1128
Phone: (505) 844-9519, Fax: (505) 844-5459, Email: schmitt@sandia.gov

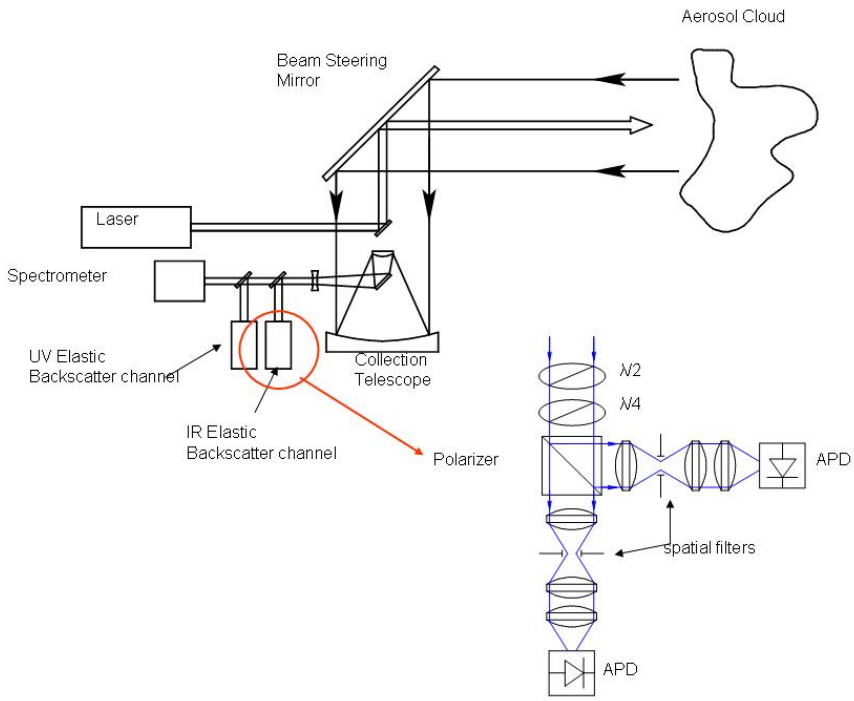

Figure 1. Schematic diagram of B70 LIDAR system. Inset shows details of the depolarization setup.

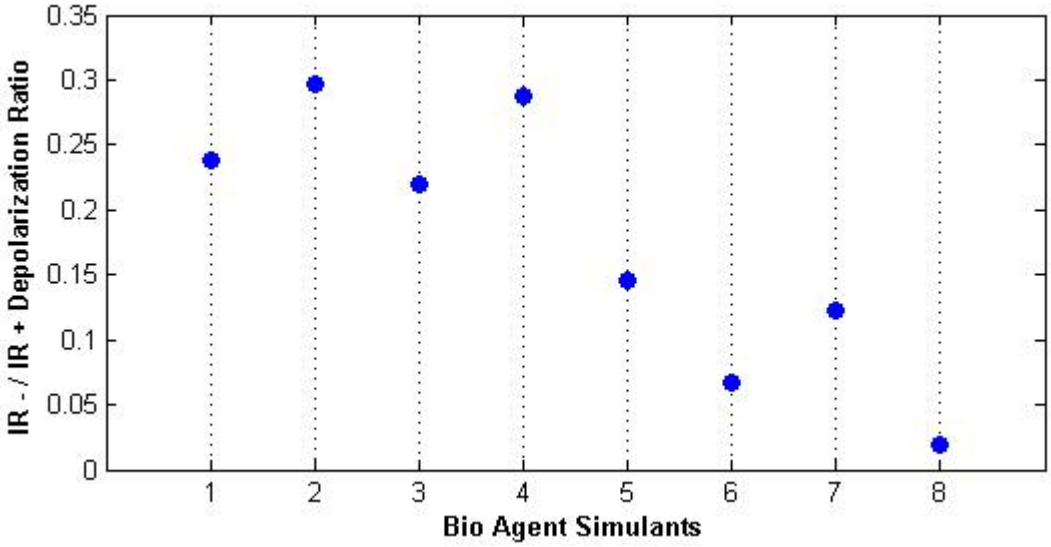

Figure 2. Depolarization values for selected simulants. The first four materials are dry, while the second four are released wet.