Ion-Induced Emission Microscopy (IIEM)

by P. Rossi, B. L. Doyle, D. S. Walsh, G. Vizkelethy, F. D. McDaniel

Motivation—A radically new form of nuclear microscopy, the IIEM, was invented by Sandia a few years ago as an alternate way to perform localized single-ion nuclear analysis, whenever ion beams are difficult to focus or when cost issues are important. The specific challenge Sandia was facing was the measurement of single event effects (SEE) on integrated circuits using high Linear Energy Transfer beams from the Sandia Tandem-Radio Frequency Quadrupole (RFQ) accelerator, operational since spring 2002. These beams have high magnetic rigidity and poor chromaticity, which make the traditional high spatial resolution micro-focusing impossible. The emission microscopy consists of: 1) irradiating the sample with a very low intensity broad ion beam; 2) measuring the impact position of the single ion by exploiting the emission of particles (electrons, ions or photons) from the surface, and 3) relating this position to the effect this ion produces on the sample.

Accomplishment—Our Department already developed prototypes of two types of IIEM, i.e. the IEEM (Ion Electron EM, in Fig. 1), based on emitted electrons and IPEM (Ion Photon EM), based on emitted light. Recent work on the IEEM was aimed at curing some weaknesses in its operation, like the reduced ion flux reaching the sample and the low electron emission yield from a non-metallic surface. Our RFQ, boosting the ion tandem energy, allows us to have one of the most ionizing radiations in the universe (Gold at 374 MeV) with a relatively simple and cheap device. A drawback is the flux limitation due to the highly reduced duty-cycle-fraction of machines of this kind (1/500). We have carried out modifications in the beam line which have dramatically raised the flux. New diagnostics and new control software have boosted the effectiveness and ease of operation, allowing easy SEE measurements.

As for the emitted electron yield, a study of coating materials has been carried out in collaboration with the Italian INFN-SIRAD group, indicating boron-doped diamond to be an outstanding "covering" material, with a yield higher than metals.

IPEM detects the light coming from a phosphor blade or coating superimposed to the sample, to measure the ion impact position with an optical microscope. The ions can come from either an accelerator or a radioactive alpha source ("Table-top" IPEM, in Fig. 2). We have already realized an "accelerator" IPEM, while we have not yet obtained an alpha source of adequate specific activity. An issue is the low spatial resolution, due to the "blooming" of light inside the phosphor. To solve this, we are developing a kind of "black matrix" with proton lithography techniques (collaboration with Singapore University): tiny wires of a micrometric mesh would delimit phosphor pads and contain the light produced in them.

Significance—We have worked to boost IEEM and IPEM to let them become an "every day" laboratory tool. IEEM is now currently used to assess SEE. IPEM promises to find application both for SEE and cellular radiobiological research. This latter should benefit from the IPEM's in-air irradiation capability.

Sponsors for various phases of this work include: Nuclear Weapons/Science & Technology
Contact: Paolo Rossi, Radiation Solid Interactions and Processing, Dept. 1111
Phone (505)844-7302; Fax (505) 844-7775; E-mail: prossi@sandia.gov

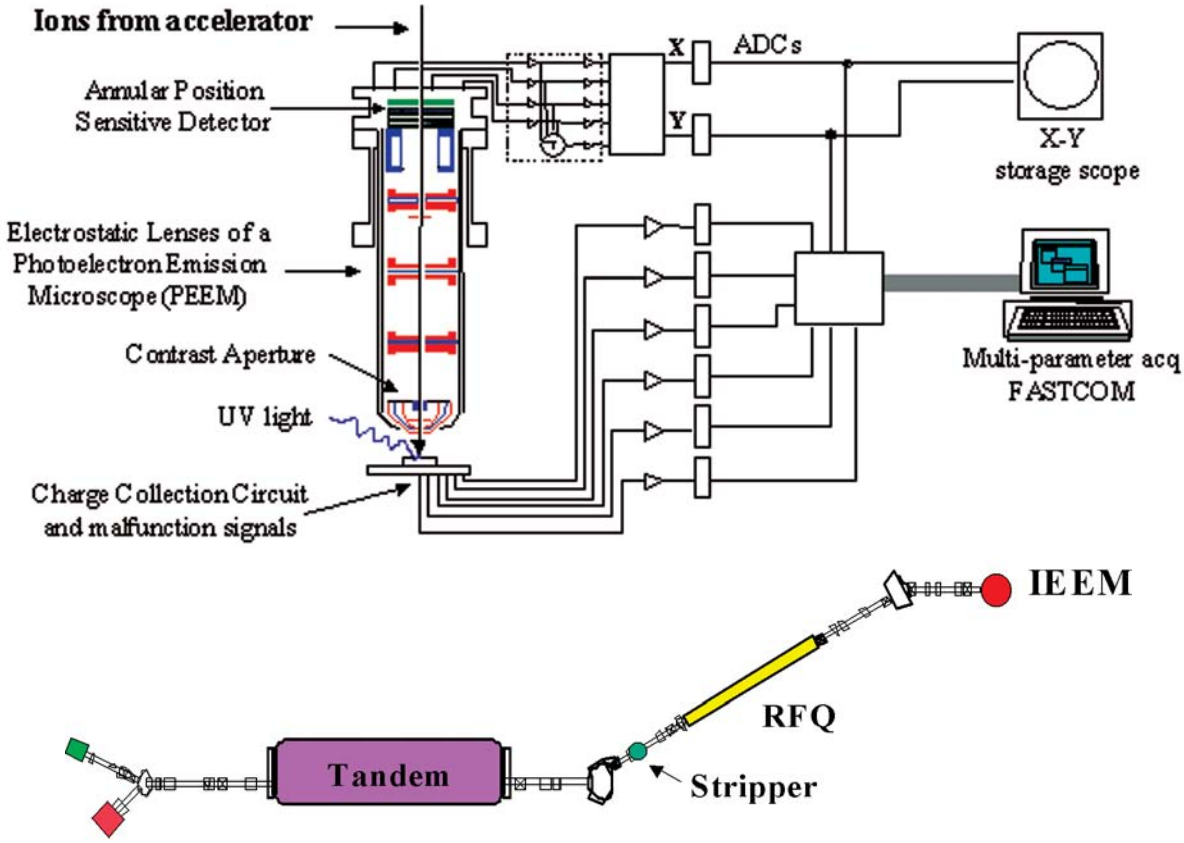

Figure 1. SSNL-IEEM schematics (top) and the Tandem-RFQ beam line (bottom).

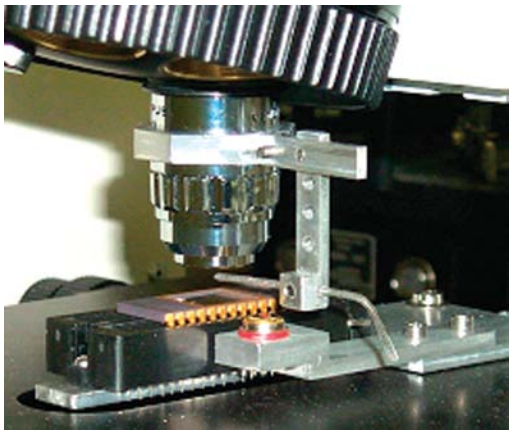

Enlargement shows the position of the lens, the alpha source support (a needle represented by an Allen wrench) and a microchip as a sample. The 1mm size source should be placed at the top of the needle.

Figure 2. Prototype of alpha particle table IPEM, with the "Mepsicron" position sensitive detector (PSD) on top of the microscope.