DOE Peer Review

ETO STATCOM Demonstration Project Update

September 30, 2008

Wayne Litzenberger - DesignTech
Loren Anderson - BPA

Participants

- **DOE Energy Storage Program**
- **Sandia National Lab**
- **NCSU**
- **EPRI**
- **TVA**
- BPA
- Florida State University-Center for Advanced Power Systems
- Tri-State
- AES-SeaWest
- Commercial Vendor ?

CONDON WIND FARM
Proposed Host Site

Full Scale Demonstration Project

- 10 MVA STATCOM with battery storage
- Adjacent to Condon Wind Park
- Mitsubishi Type 1 induction machines
- Poor voltage regulation
- Long line with many small customers

Proposed 10 MVA ETO STATCOM for Condon Wind Farm

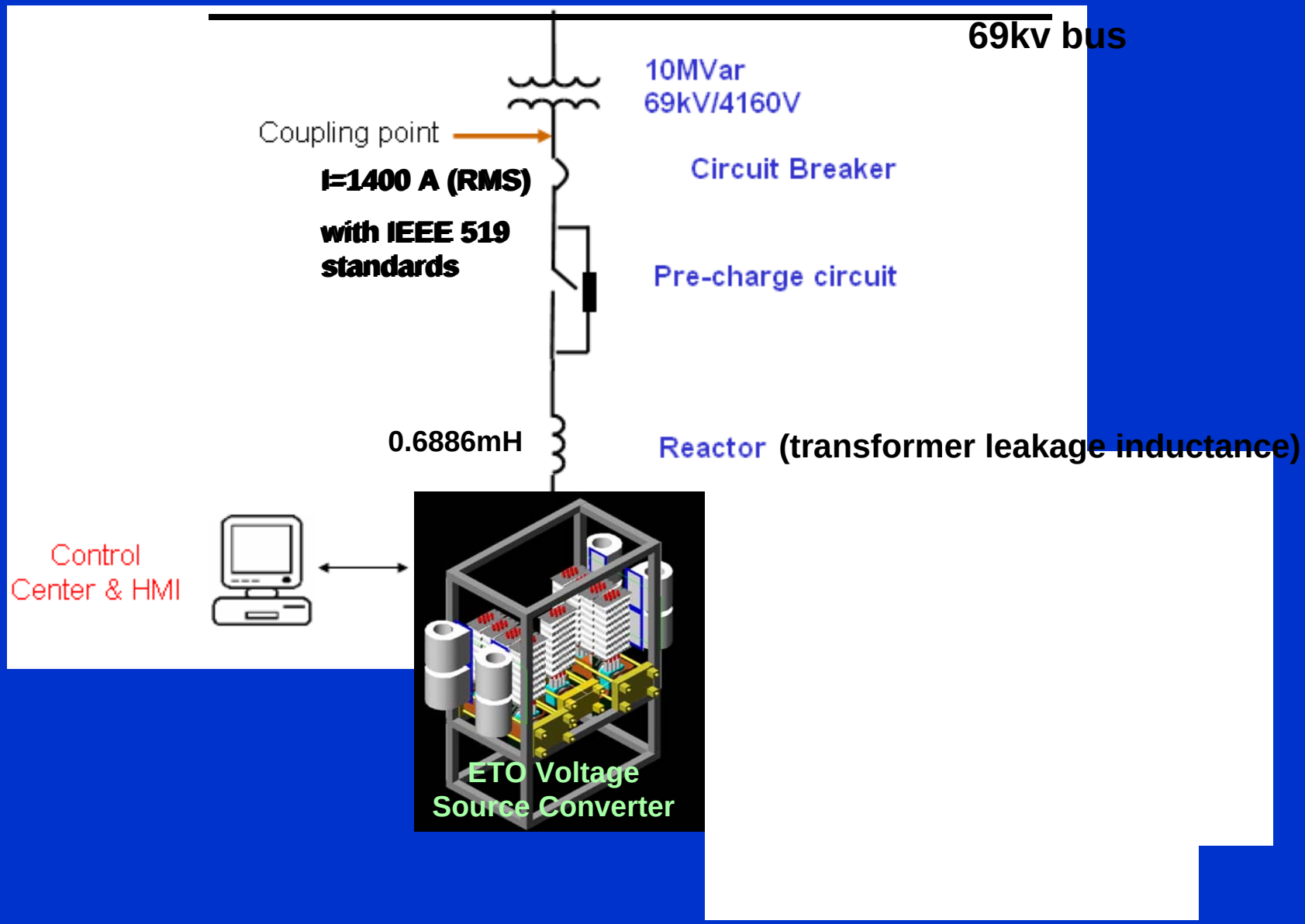

Condon Windfarm Problems

1. Voltage regulation trouble– Loss of control over Inductive VAR compensation caps
2. Turbine main breaker trips and controller faults during 69kv undervoltage transient events
3. Harmonic sink for 5th harmonic – overheating the local turbine compensation current limiting reactors.
4. Megawatt output limited to 15MW on single ended feed.

24 hrs Condon Wind 10/15/06

VQ sensitivity from FSU model

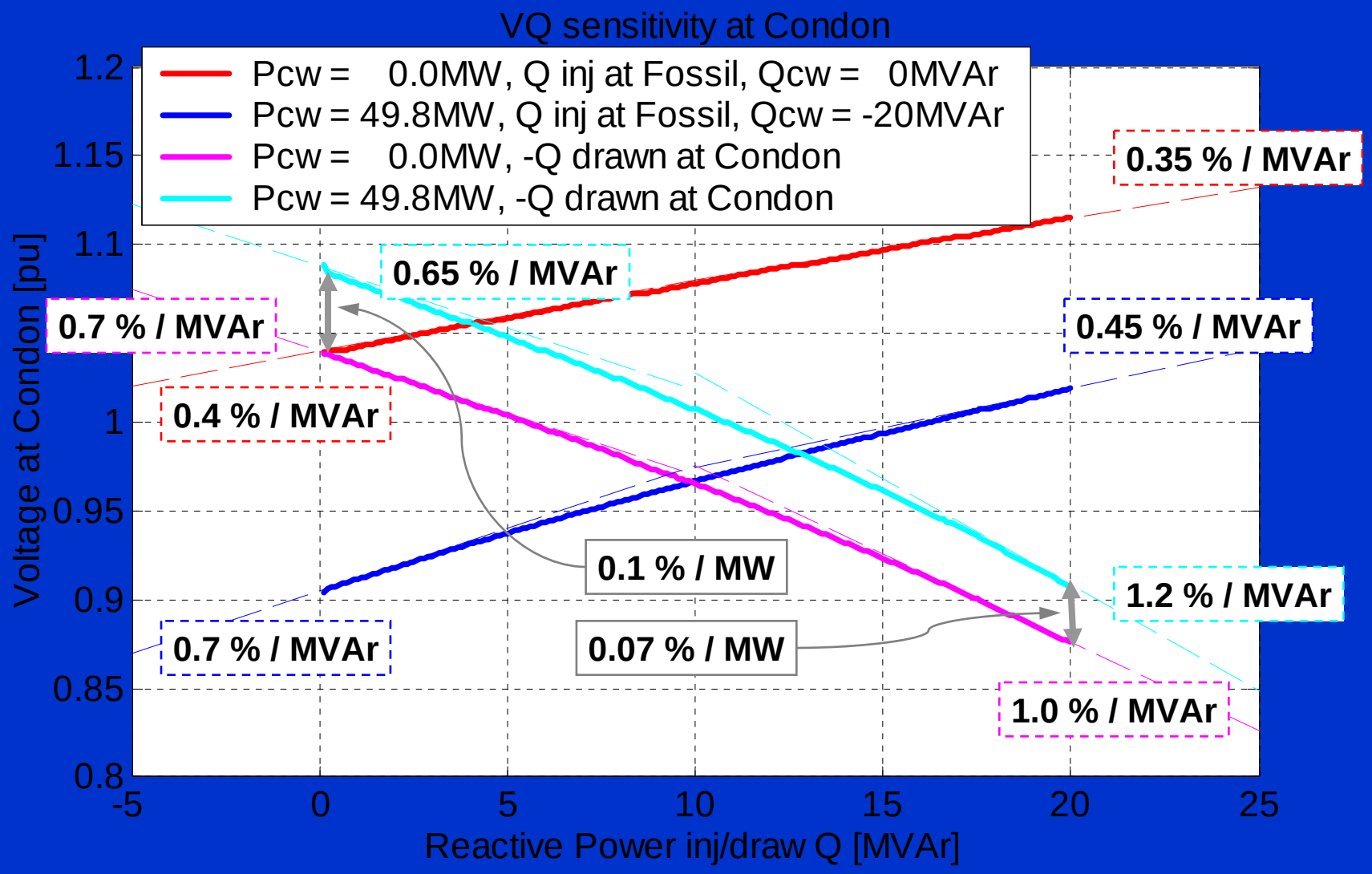

Analysis of Power Flow Results and SCADA Data

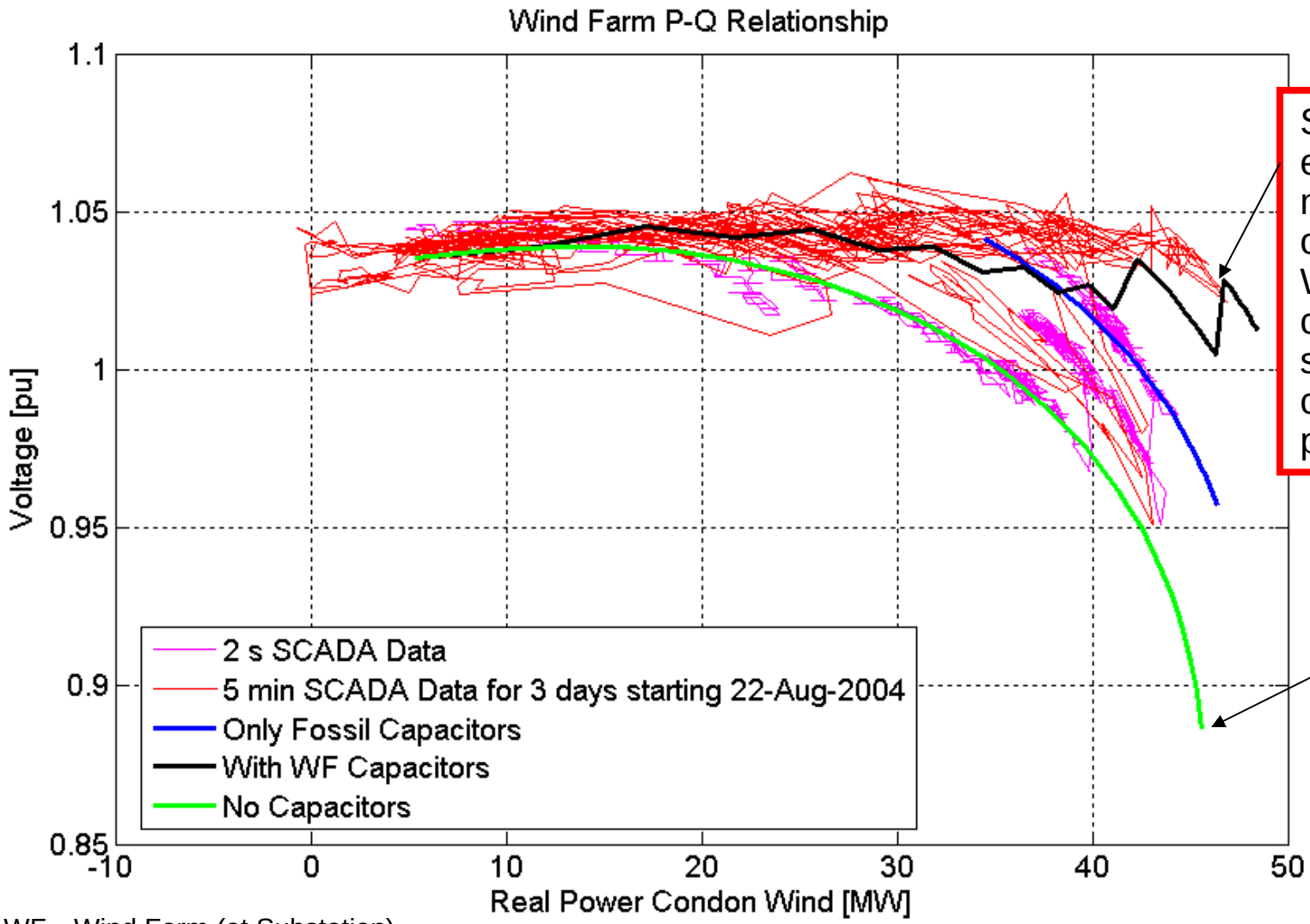

Strong evidence that malfunctioning of Condon Wind Farm capacitor switching causes the problem

Leads into V-Collapse

WF…Wind Farm (at Substation)

ETO Thyristor STATCOM

Demonstrate Emitter turn-off thyristor in a 5 level 10MVA - stacked H bridge configuration

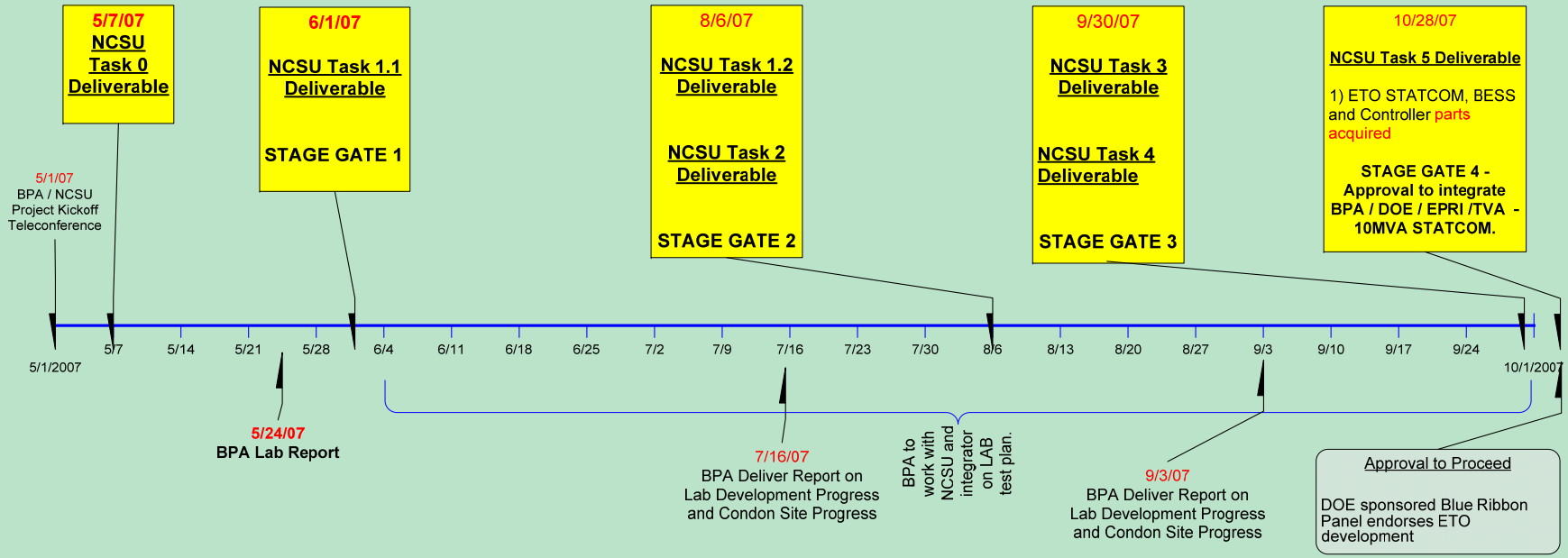

TOTAL FY07 = $776,653	BPA = $499,995	Co-Fund = $276,658

Contractor: North Carolina State University

Principle investigator: Dr. Alex Huang – patent holder for ETO Thyristor

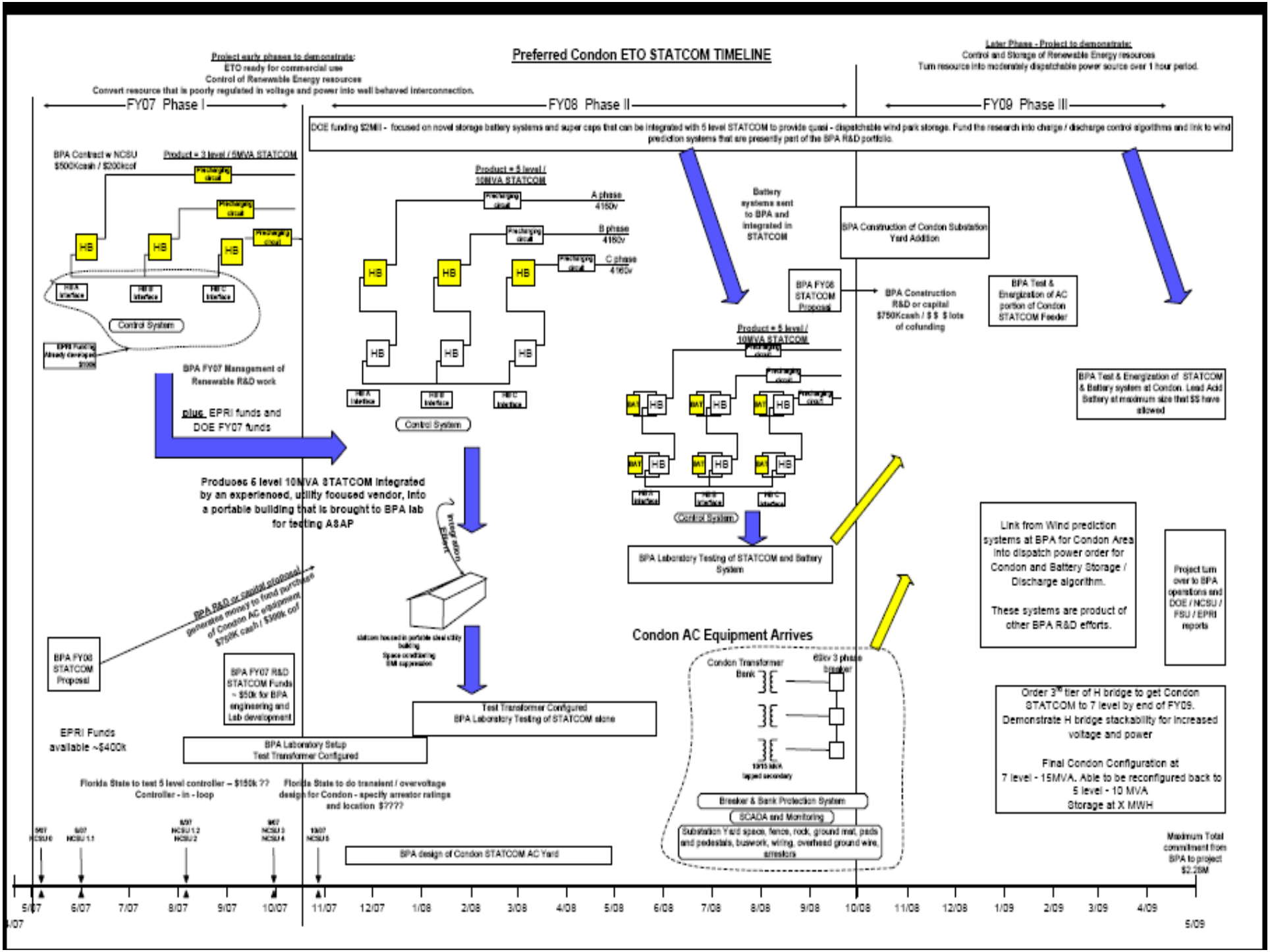

Preferred Condon ETO STATCOM TIMELINE
Project early phases to demonstrate:
ETO ready for commercial use
Control of Renewable Energy resources
Convert resource that is poorly regulated in voltage and power into well behaved interconnection.
Later Phase - Project to demonstrate:
Control and Storage of Renewable Energy resources
Turn resource into moderately dispatchable power source over 1 hour period.
FY07 Phase I
FY08 Phase II
FY09 Phase III
DOE funding $2Mil - focused on novel storage battery systems and super caps that can be integrated with 5 level STATCOM to provide quasi - dispatchable wind park storage. Fund the research into charge / discharge control algorithms and link to wind prediction systems that are presently part of the BPA R&D portfolio.
BPA Contract w NCSU $500Kcash / $200kcof
Product = 3 level / 5MVA STATCOM
Precharging circuit
HB
HB A interface
HB B interface
HB C interface
Control System
EPRI Funding Already developed $100k
BPA FY07 Management of Renewable R&D work
plus EPRI funds and DOE FY07 funds
Product = 5 level / 10MVA STATCOM
A phase 4160v
B phase 4160v
C phase 4160v
Battery systems sent to BPA and integrated in STATCOM
BPA Construction of Condon Substation Yard Addition
BPA FY08 STATCOM Proposal
BPA Construction R&D or capital $750Kcash / $ $ $ lots of cofunding
BPA Test & Energization of AC portion of Condon STATCOM Feeder
Product = 5 level / 10MVA STATCOM
BAT
BPA Test & Energization of STATCOM & Battery system at Condon. Lead Acid Battery at maximum size that $$ have allowed
Produces 5 level 10MVA STATCOM integrated by an experienced, utility focused vendor, into a portable building that is brought to BPA lab for testing ASAP
Integration Effort
BPA Laboratory Testing of STATCOM and Battery System
Link from Wind prediction systems at BPA for Condon Area into dispatch power order for Condon and Battery Storage / Discharge algorithm.
These systems are product of other BPA R&D efforts.
Project turn over to BPA operations and DOE / NCSU / FSU / EPRI reports
BPA R&D or capital proposal generates money to fund purchase of Condon AC equipment $750K cash / $300k cof
BPA FY08 STATCOM Proposal
BPA FY07 R&D STATCOM Funds ~ $50k for BPA engineering and Lab development
Condon AC Equipment Arrives
Condon Transformer Bank
69kv 3 phase breaker
13/15 MVA tapped secondary
Test Transformer Configured
BPA Laboratory Testing of STATCOM alone
EPRI Funds available ~$400k
BPA Laboratory Setup
Test Transformer Configured
Order 3rd tier of H bridge to get Condon STATCOM to 7 level by end of FY09.
Demonstrate H bridge stackability for increased voltage and power
Final Condon Configuration at 7 level - 15MVA. Able to be reconfigured back to 5 level - 10 MVA
Storage at X MWH
Florida State to test 5 level controller – $150k ??
Controller - in - loop
Florida State to do transient / overvoltage design for Condon - specify arrestor ratings and location $????
Breaker & Bank Protection System
SCADA and Monitoring
Substation Yard space, fence, rock, ground mat, pads and pedestals, buswork, wiring, overhead ground wire, arrestors
BPA design of Condon STATCOM AC Yard
Maximum Total commitment from BPA to project $2.28M
5/07
6/07
7/07
8/07
9/07
10/07
11/07
12/07
1/08
2/08
3/08
4/08
5/08
6/08
7/08
8/08
9/08
10/08
11/08
12/08
1/09
2/09
3/09
4/09
5/09

Power Smoothing via battery

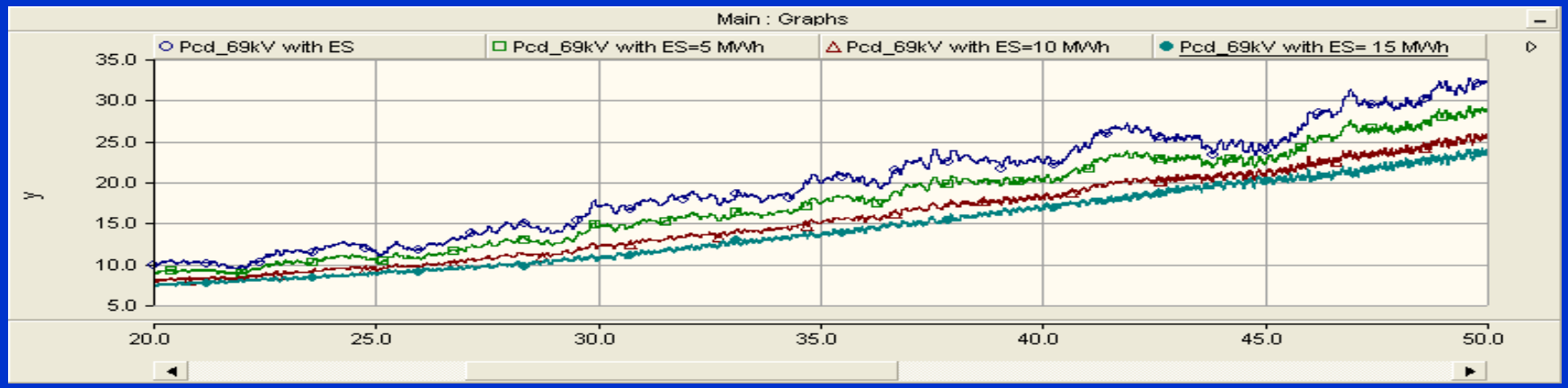

30 minute Power Ave

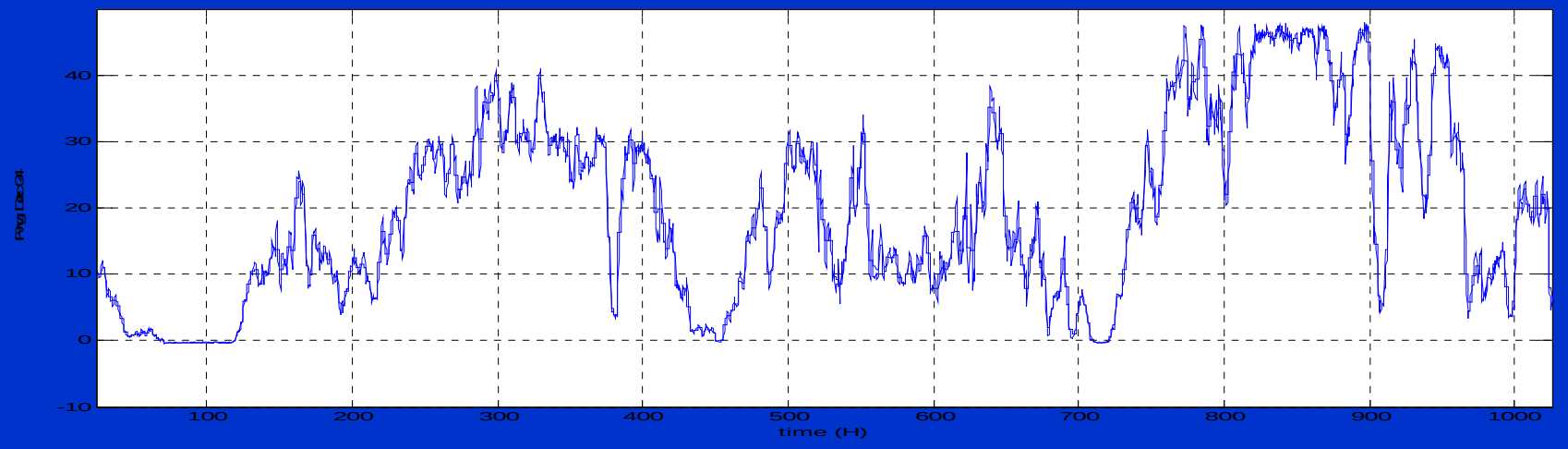

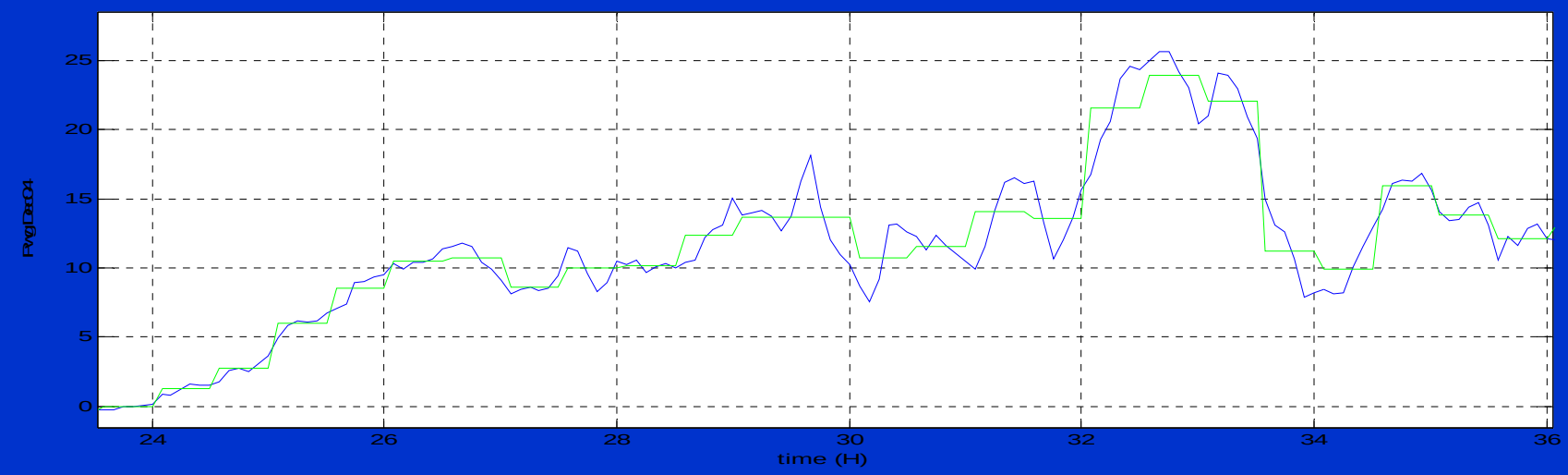

Smoothing performance index PI vs. energy storage size (MWh) for a time constant of one hour

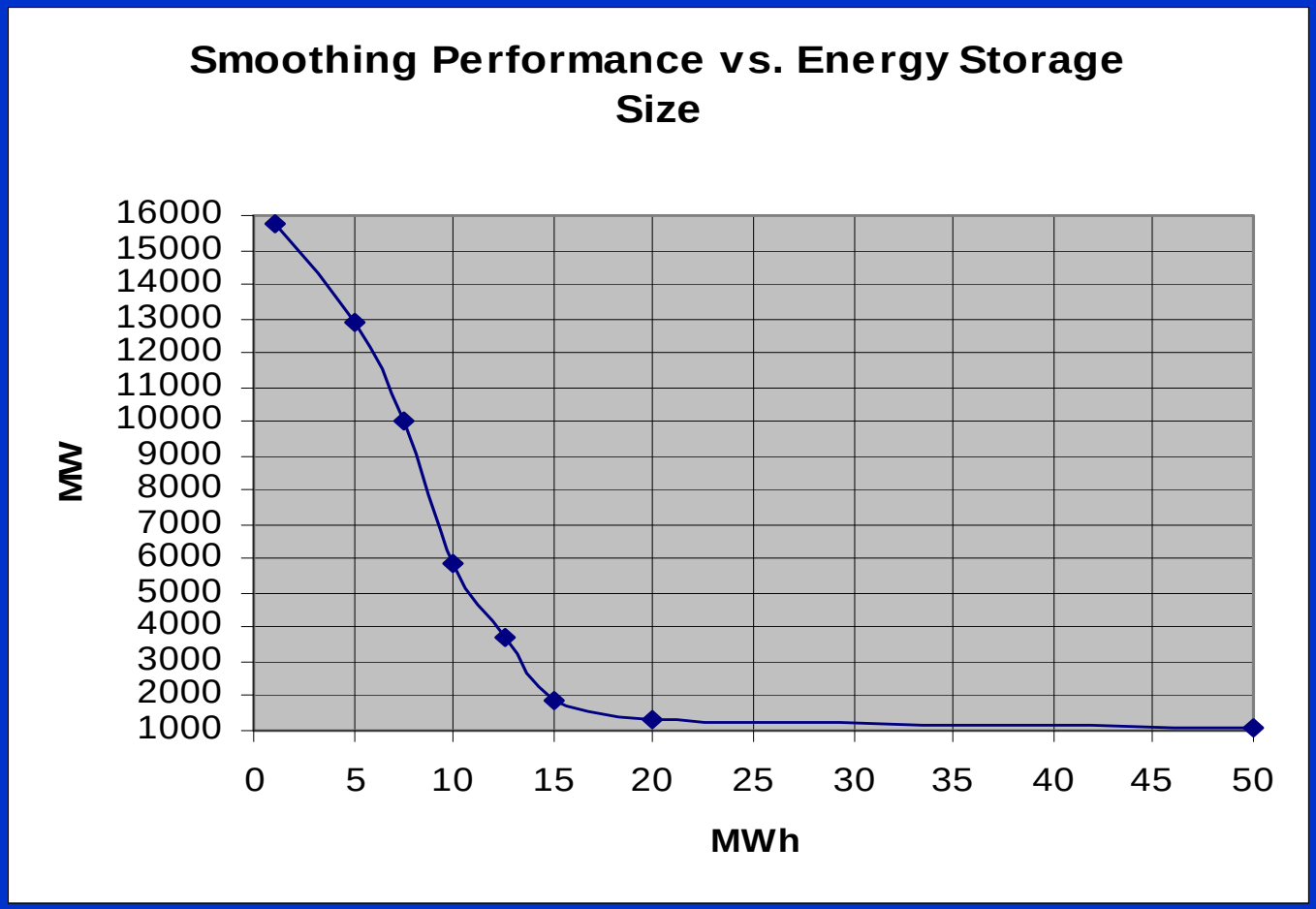

Converter Topology: Five Level CMC

CMC = Cascaded Multilevel Converter

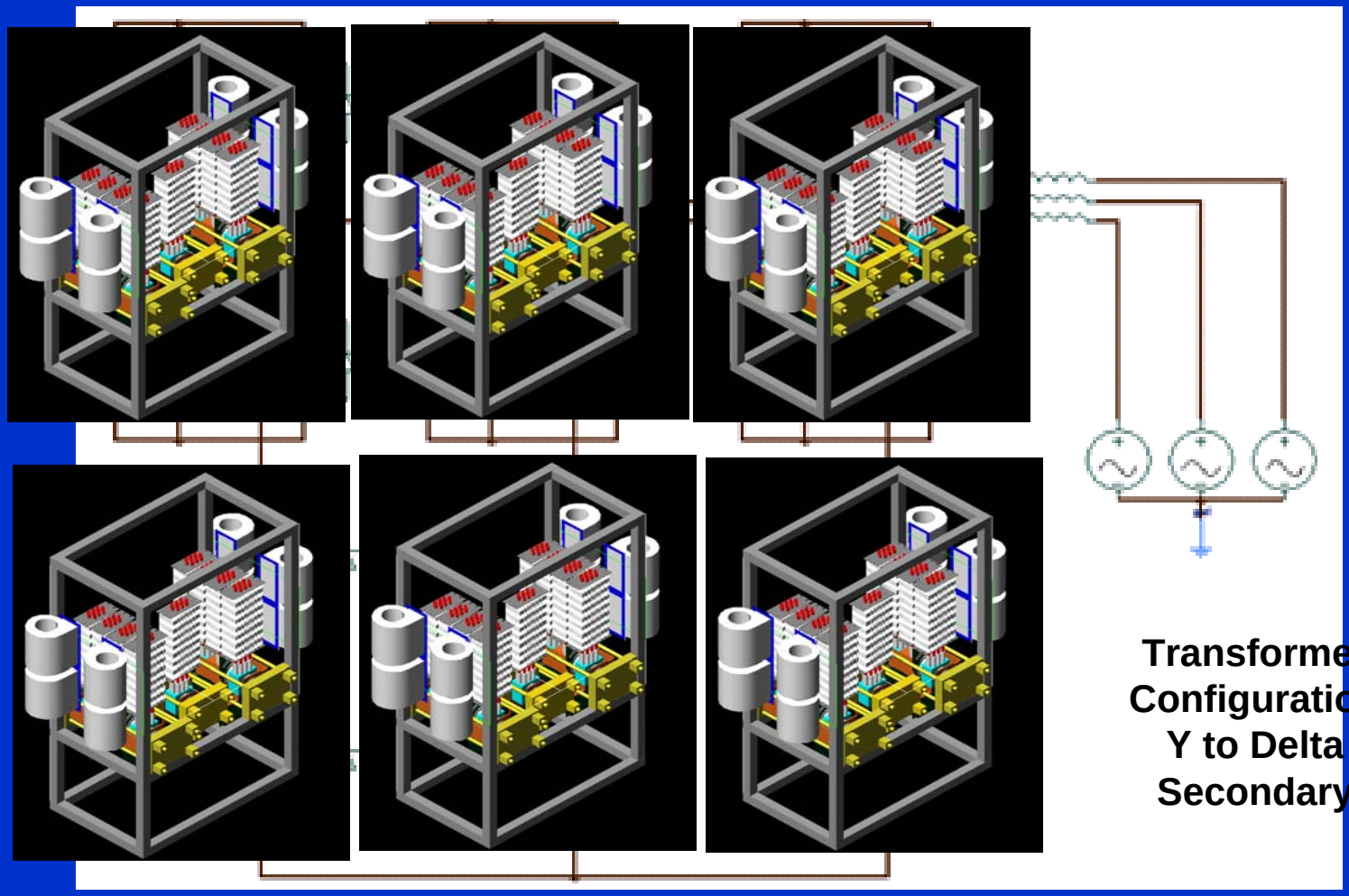

Six *ETO Light* converters will be used

TESTING

- Digital Controller
  - Testing at NCSU (finished)
  - Testing at FSU – Contract w/ EPRI

Scalable Modular Controller Architecture

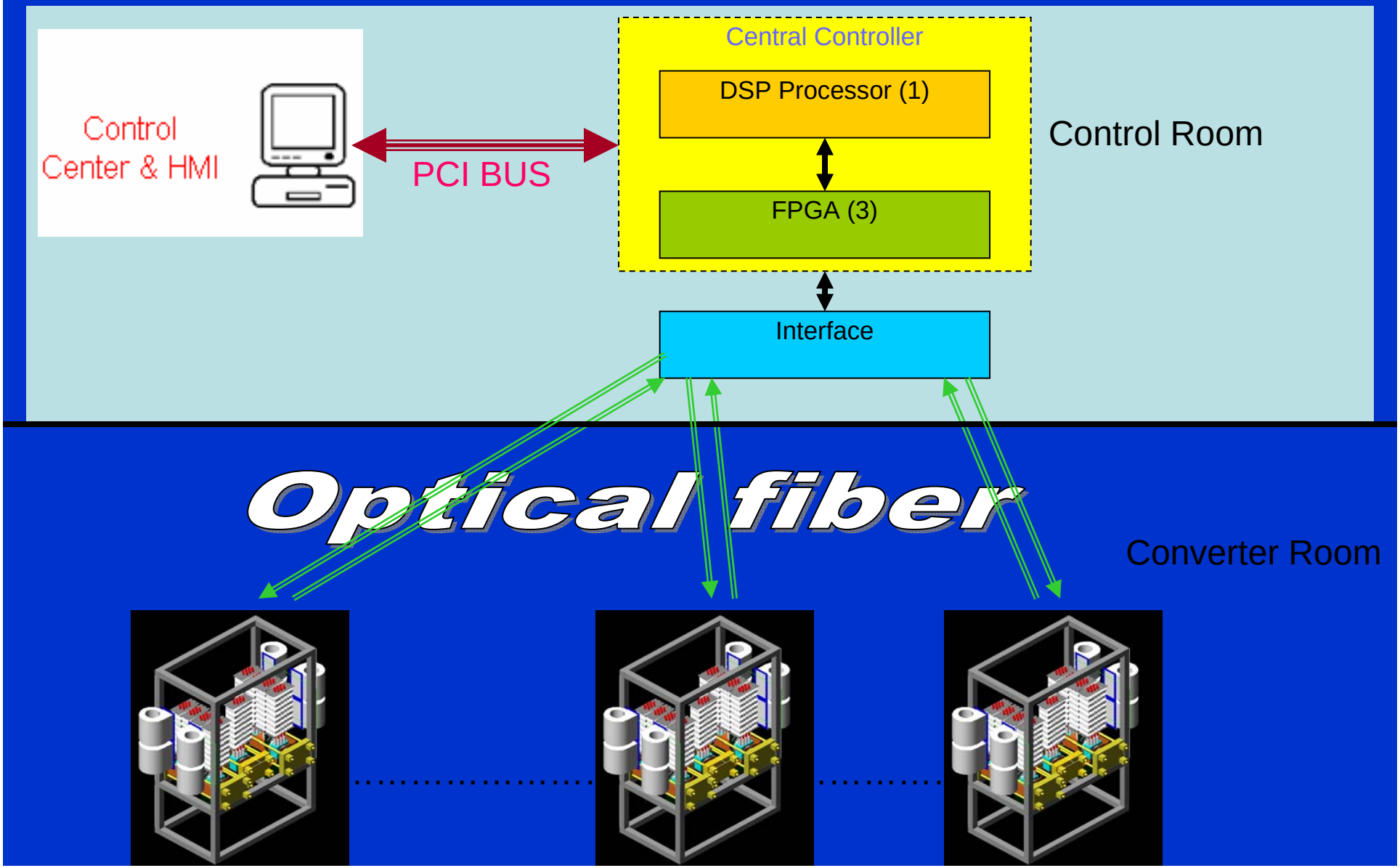

CAPS Large-Scale High-Fidelity Transient Power System Simulation

- Largest **real-time digital simulator** (RTDS) installation in any university, worldwide
- Systems studies sized up to **250 three-phase buses** at **50/2μs time steps**
- High-speed analog I/O to enable **realistic control and power HIL experiments**
- Additional off-line simulation tools, i.e.: *EMTDC*, *Matlab*, *PSS/E*
- Established expertise in **understanding the details** of novel and legacy power system apparatus and their **interaction with the system**
- **Knowledge in system simulation** methods, analysis, and interpretation of results

Controller Hardware in Loop (CHIL) and Power hardware in loop (PHIL)

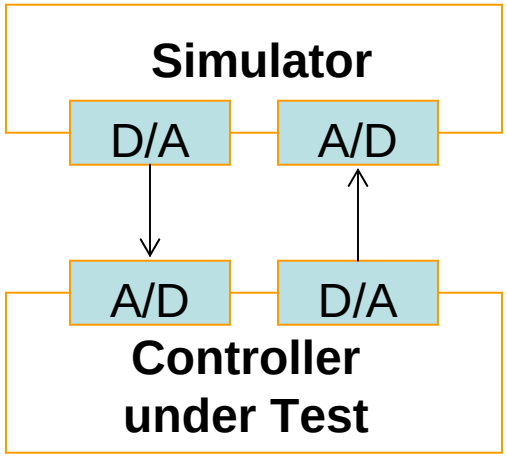

- Controller HIL Simulation
  - Controller under test
  - Low level transmitting signals (+/-15V, mA)
  - A/D and D/A converters are adequate for the interface

- Power HIL Simulation
  - Power device (load, sink) under test
  - High level transmitting signals (kV, kA, MW)
  - Power amplifiers required for interface

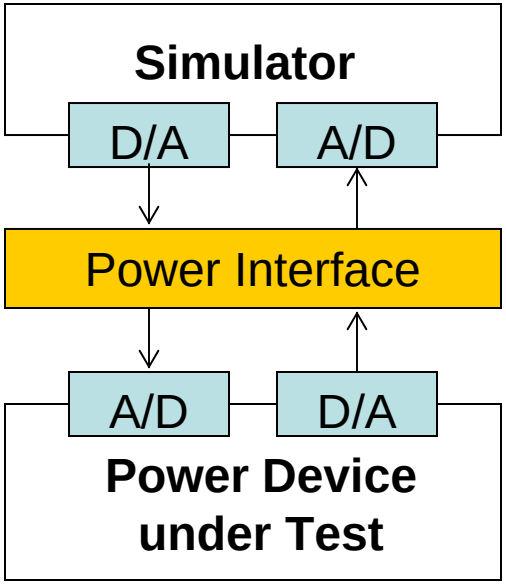

Testing of a 13.75 MVA STACOM in RTDS-PHIL Facility at CAPS

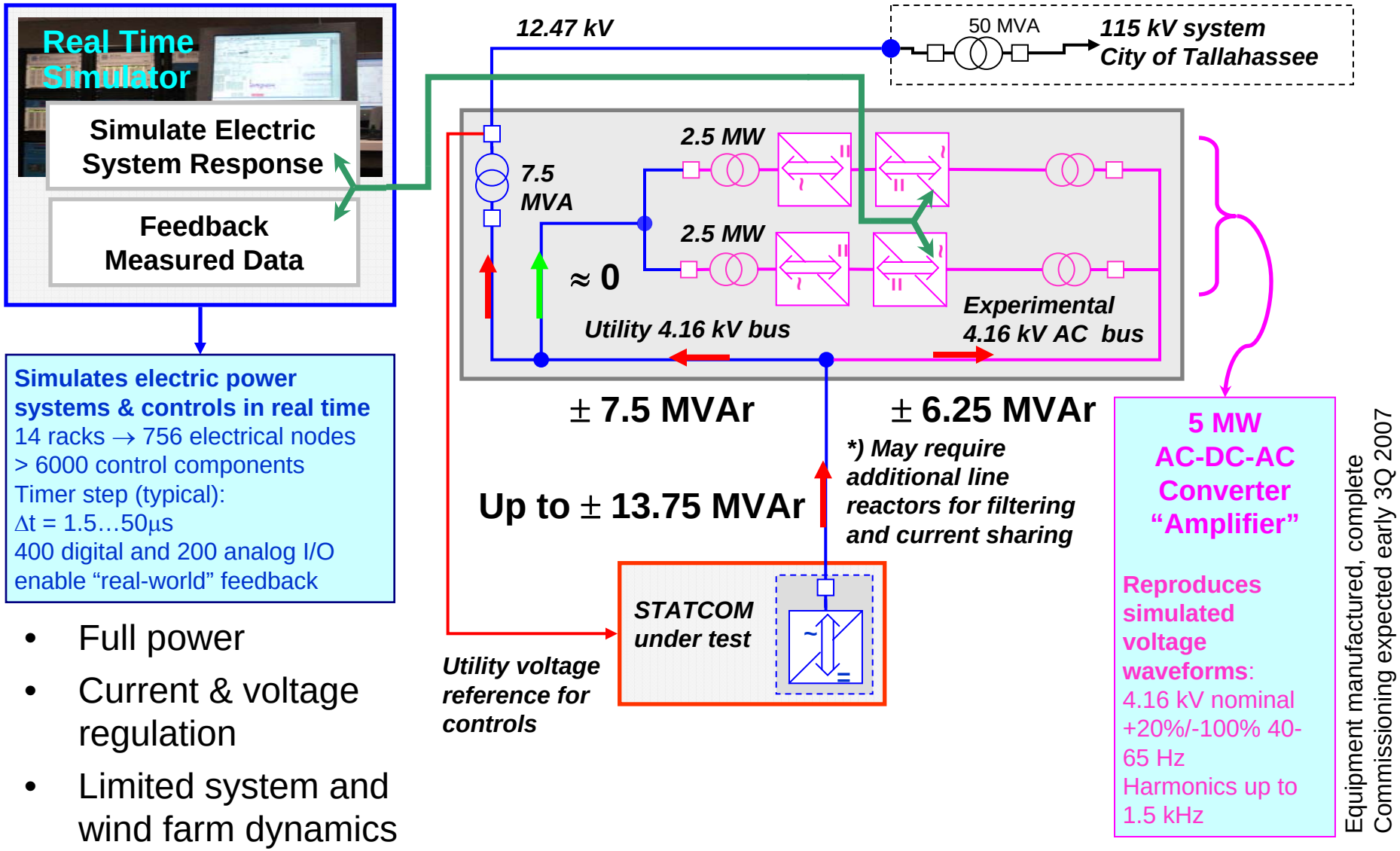

Simulates electric power systems & controls in real time
14 racks → 756 electrical nodes
> 6000 control components
Timer step (typical):
$\Delta t = 1.5 \ldots 50 \mu s$
400 digital and 200 analog I/O enable "real-world" feedback

- Full power
- Current & voltage regulation
- Limited system and wind farm dynamics

ETO STATCOM Review

- **<u>Curtiss Wright contract with Sandia NL</u>**
- Assure conformance with utility needs
- Review NCSU design

- **<u>BPA contract for Expert Panel Review</u>**

Energy Storage – Sandia Labs

- Lead Acid Batteries - Tom Hund Report
- Flow Batteries
- Vanadium Redox Batteries
- SuperCapacitors

3 Phase Step-down Transformer

Condon Loop One Line

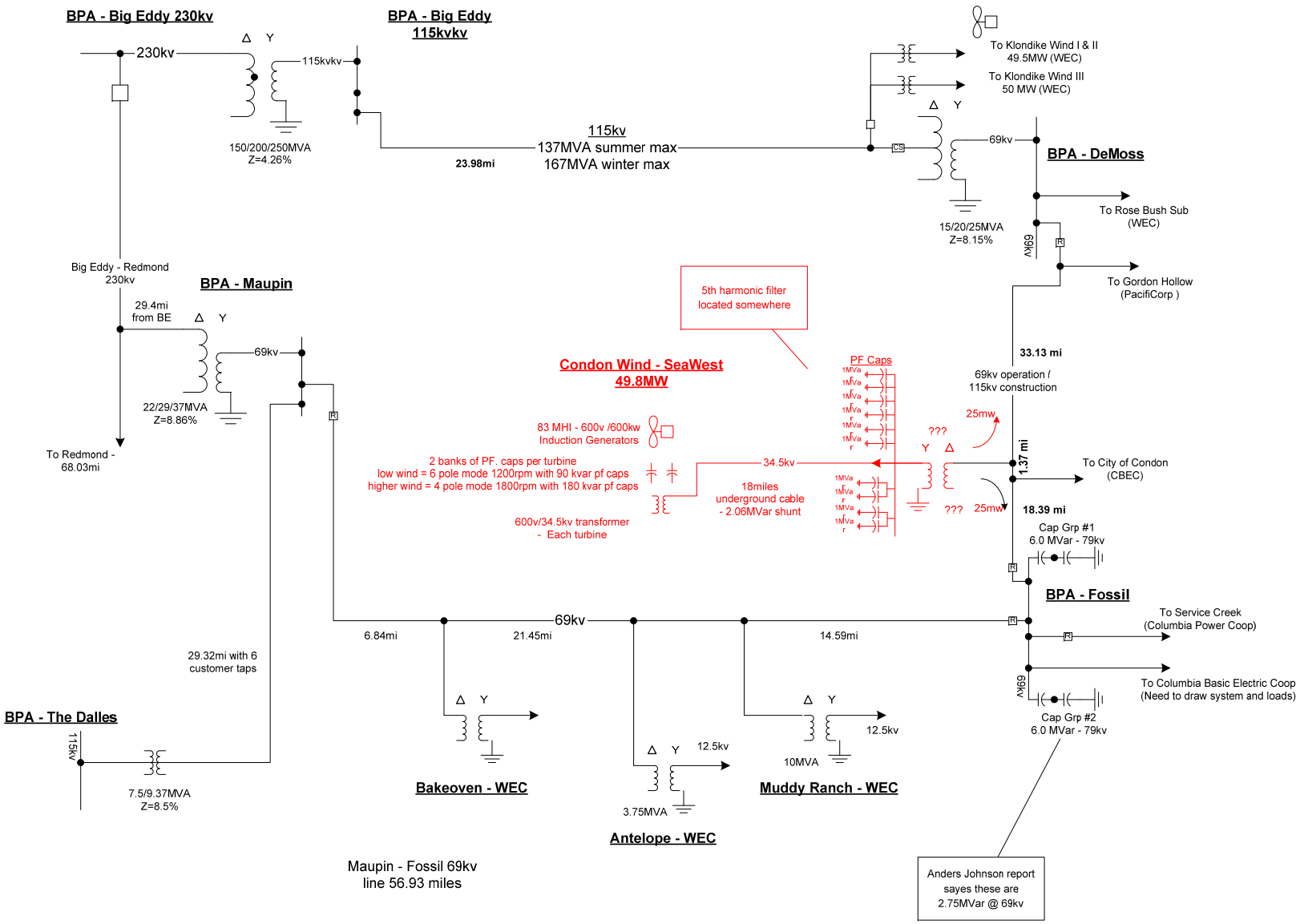

Drawing2	11/14/05	14:18	LA

Questions

Next Steps

- Get FY08 BPA funding in place - $750k
- Select Integrator and assemble STATCOM - 08
- STATCOM Testing in BPA LAB -08
- DOE Funding for Energy Storage $2M- 08
- Integrate Energy Storage into STATCOM - 08
- Test Combined System in Lab - 08
- Design STATCOM Substation -08
- Order Substation Materials – 08

- Build Substation – 09
- Install STATCOM -09
- Commission STATCOM -09
- Integrate Wind Forcasting system into Energy Storage Control Algorithm – 09 or later