US DOE PEER REVIEW

Washington, D.C.

November 3, 2006

Long Island Bus Sodium Sulfur Battery Storage Project

Yan Kishinevsky

New York Power Authority

LI Bus Issues

LIPA Tariff	Time	Energy ($/kWh)	Demand ($/kW/month)
I, off peak	Mid-7am	$ 0.0440	$ -
II, peak	June - Sep Mon – Sat 10am -10pm	$ 0.0762	$ 34.350
III, intermediate	All other	$ 0.0737	$ 3.420

- Peak demand charge for four months of the year: $34.35/kW plus fuel surcharge
- Current 3–shift operation
- High electric bills and administrative charges

Project Goals and Objectives

- Achieve cost savings by eliminating third shift while avoiding peak demand charges
- Increase back up power for the entire facility
- Reduce peak demand on the heavily loaded utility grid
- Demonstrate long term, commercial environment, high efficiency energy storage operation

Battery Storage Solution

- 1.0 MW, 6.5 MW-hr NGK NaS battery
- Grid parallel configuration
- Automated load shift
- 75% system efficiency
- Low maintenance
- Low noise
- Zero emissions

Why NaS ?

Advantages over DG and other Batteries:

- Ease of Operation & Maintenance
  - No moving parts, long service life
- Minimal Environmental Impact
  - No emissions, silent
- Versatility
  - Peak-shaving, load-leveling, and PQ mitigation
- Relatively Small Foot print
  - High efficiency, energy and power density

NAS Battery Characteristics

Characteristics	Individual NaS Cell	NaS G50 Battery Modules
Nominal Voltage (dc)	2	64 or 128
Operating Temperature	290 to 360^{0}C	
Cell Arrangement ("s" series; "p" parallel)	Single	(8s x 5p) x 8s or (8s x 10p) x 4s
Electrical Protection	NA	Internal fuse within each 8s string
Rated AC Capacity	628 Ah	360 kWh ac
Rated AC Power	NA	50 kW ac
Projected Calendar & Cycle Life	15 years: 4500 to 90%, 2500 to 100% DOD cycles	
Avg DC Efficiency, %	90	85
Standby Heat Loss, kW	NA	3.4
Dimensions, mm (in)	515L x 91Φ (20.3L x 3.6Φ)	2,270W x 1,740D x 720H (89.4W x 68.5D x 28.4H)
Weight, kg (lb)	5.5 (12.1)	3500 (7920)

1MW NAS Module Configuration

Each NAS module is rated at 50 kW and consists of 320 strings configured as shown

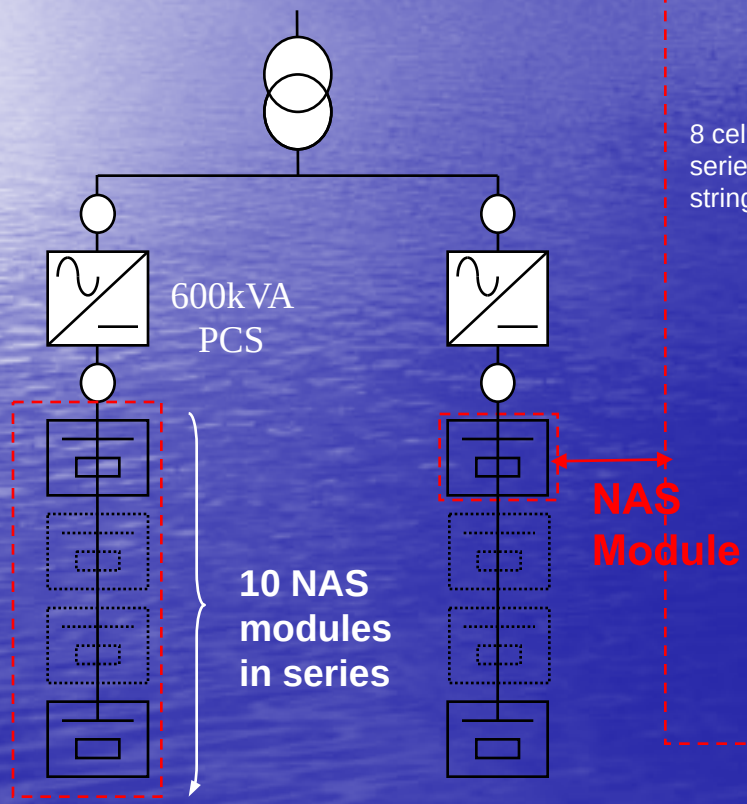

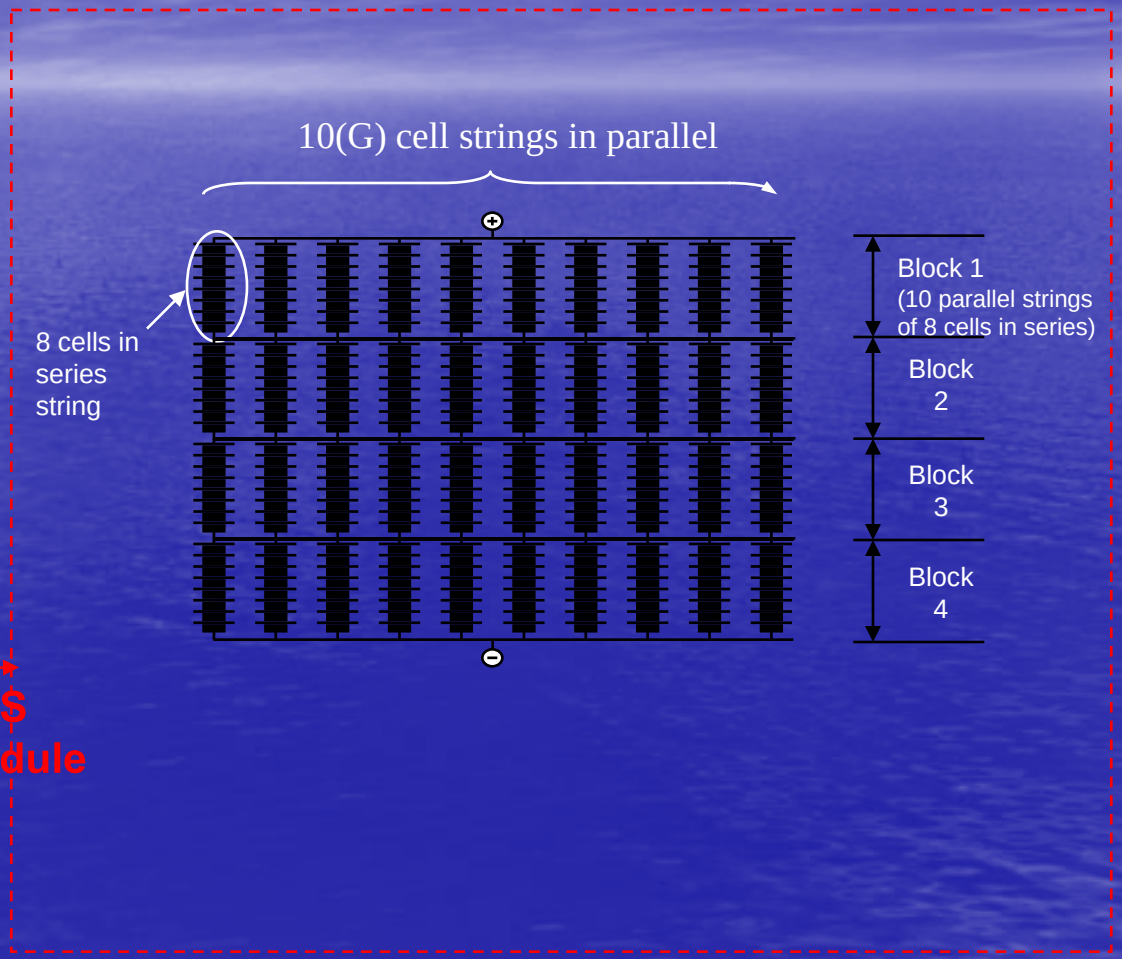

Site Description

- Natural gas refueling station for 220 buses
- 3 x 600 HP compressor load
- Dedicated LIPA feeder

LI Bus Gas Compressor Site

NAS Battery System Overview

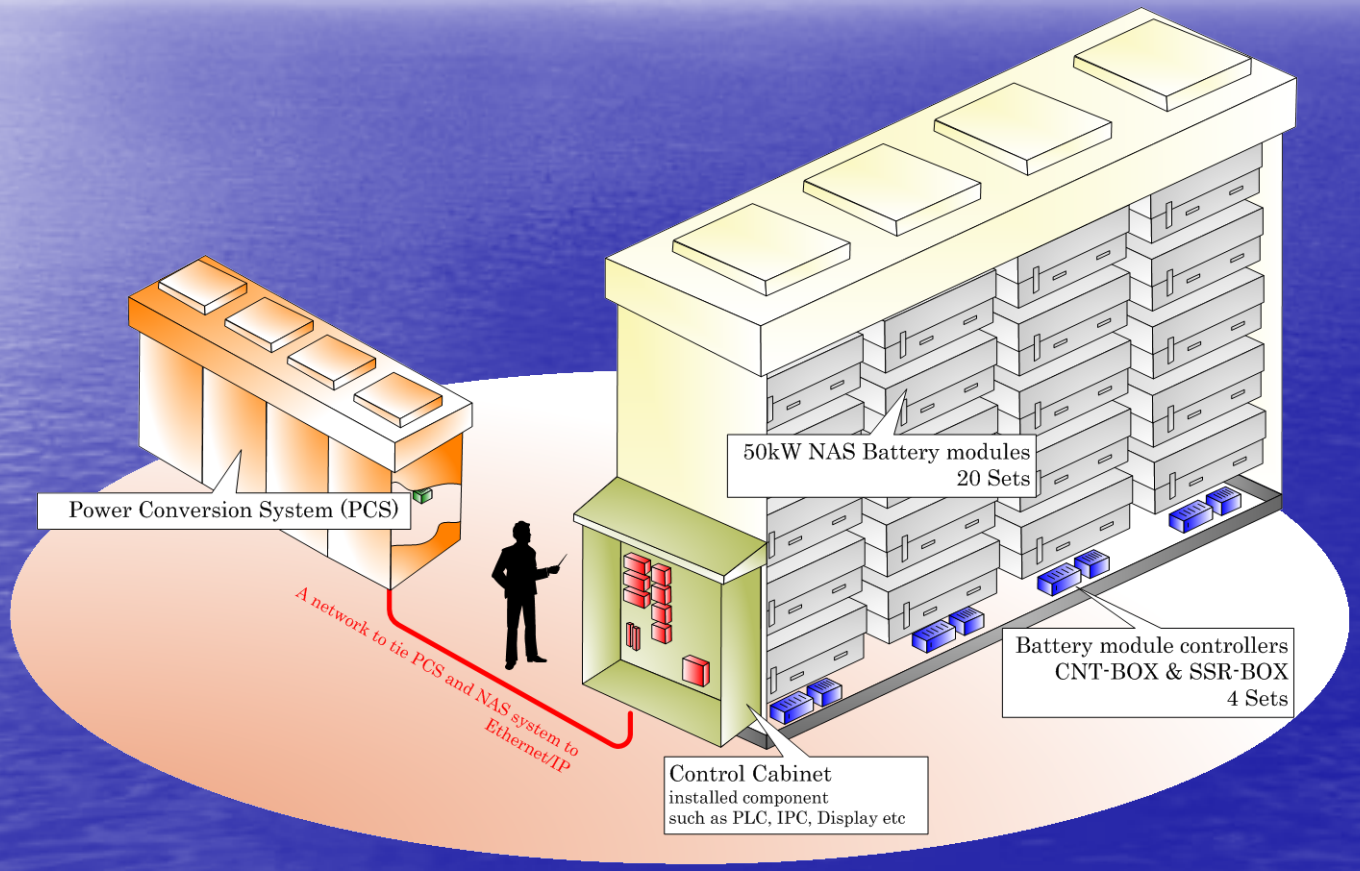

Scope of Work

- Battery modules and enclosure
- Power Conditioning System (PCS)
- Integration of PCS with the battery system
- Balance of Plant (BOP) equipment and enclosures
- System interconnection and integration with the grid and load
- Installation, startup, training and commissioning
- Documentation and O&M manuals
- O&M and performance warranty during 18 month demonstration period

Project Team

- NYPA – Overall project implementation
- MTA/Long Island Bus – Host site, end user
- NGK Insulators, Inc. – NaS battery manufacturer
- ABB – PCS, Controls, Design and Installation
- DOE/NYSERDA – Performance monitoring
- EPRI – Technical assistance, technology transfer
- LIPA – Grid Integration, technical assistance

Budget & Cofunding

Total Project Cost:	$3,850,000
DOE/NYSERDA	$1,000,000
EPRI*	$585,000
CEATI/NRCAN	$52,000
LIPA	$200,000+
APPA	$75,000
	$1,912,000

* The following utilities are providing cofunding through EPRI: Con Ed, PSE&G, NYISO, FirstEnergy Corp., Hydro One, Hydro-Québec, SDG&E, Southern Company, TVA

Project Installation Snapshots

Battery Module

- Comprised of 320 individual battery cells
- Picture shows cover removed
- Variable series and parallel arrays to yield module DC voltages of 64 or 128 V
- Sand packing used between the cells for structure and heat sink
- Thermal management using electric heaters and vacuum insulation to maintain a minimum operating temperature of 290^0C
- Standby loads about 3.4 kW when not in operation

HAWKEYE

PCS Units

System Performance Monitoring

(Data Management will be provided by DOE)

- System operating state durations
- AC voltage and current
- DC voltage, current, state of charge, and internal temperatures
- Ambient temperatures
- Auxiliary loads
- System response times to changes in operating conditions
- Energy and power into and out of the system for each AC phase in the system

System Performance Monitoring (continued)

- System loads
- System duty cycle count
- System failures and problems
- System conversion efficiencies during full and part-load operation
- Losses during periods of standby
- System response to abnormal events
- Data uploaded daily to central server
- All data time stamped to 1 second, with 15 minute averaging

Expected System Performance (light cycle)

Chart A: NAS Battery Expected Performance at 167 Cycles per Year

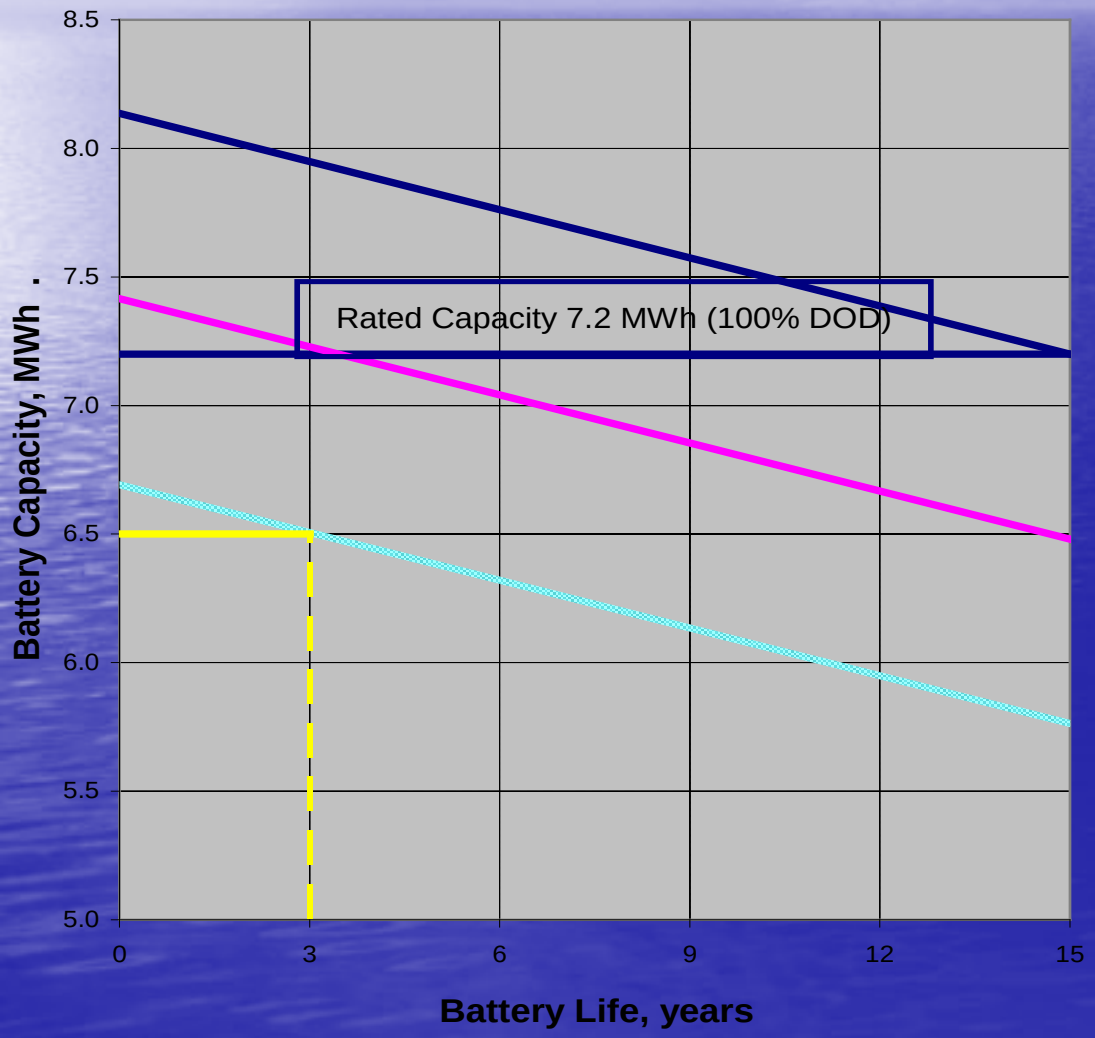

Rated Capacity 7.2 MWh (100% DOD) (2500 cycles or 167 cy/yr)

No Cell Failures (CF) (167 cy/yr)

Up to 1 CF ea Blk (167 cy/yr) (Avail > 97% for MTTR = 3 yr)

Up to 2 CF ea Blk (167 cy/yr) (Avail > 97% for MTTR = 15 yr)

Warranted Capacity, Period

System Rating:

Rated Power: 1 MW
Rated Capacity: 7.2 MWh
Max Power: 1.2 MW (< 3 hr)

Assumed Duty Cycle:

2500, 100% DOD cycles over 15 yr
Equivalent to 167 cy/yr

Expected System Performance (heavy cycle)

Chart B: NAS Battery Expected Performance at 300 Cycles per Year

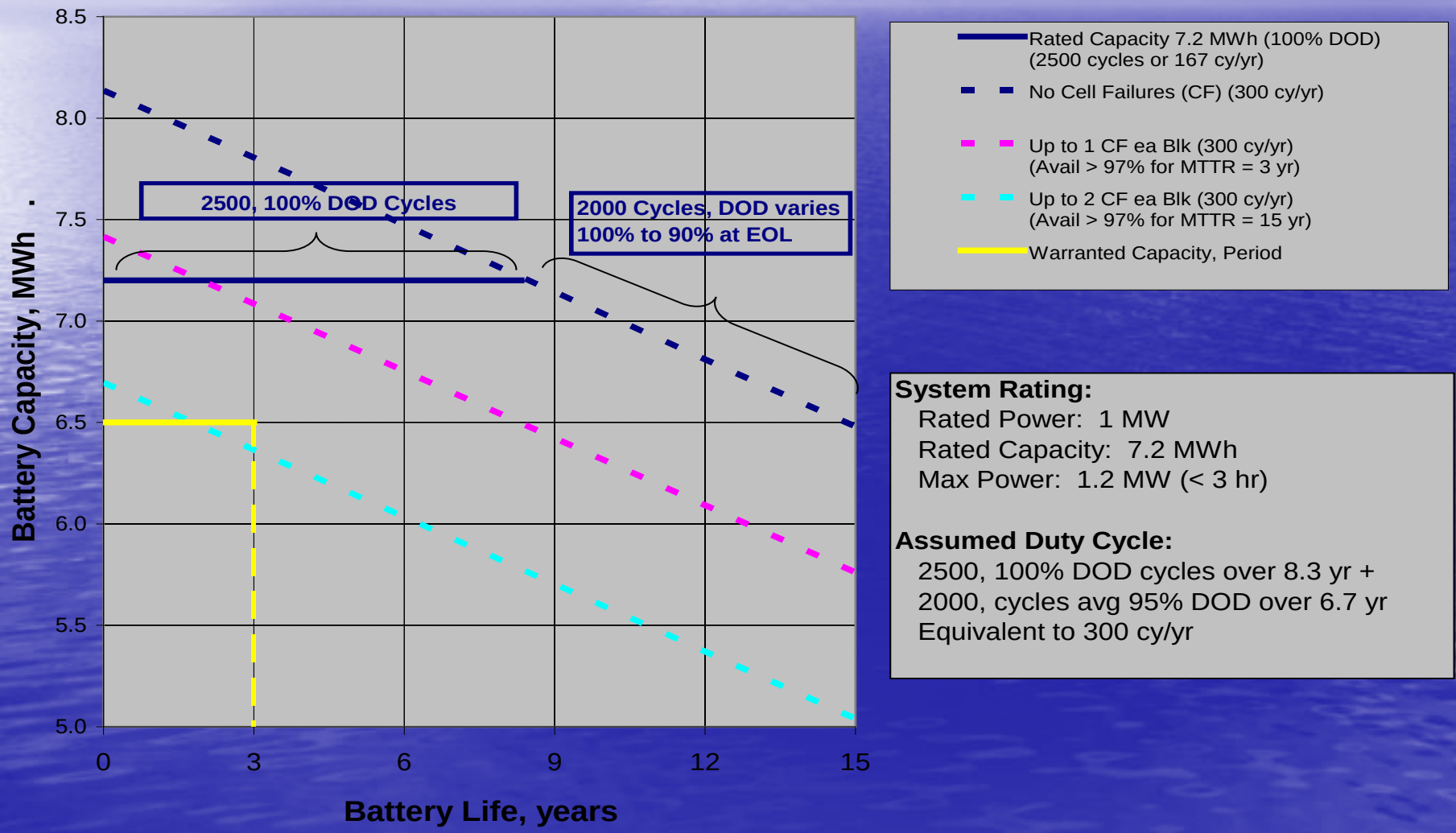

System Rating:
Rated Power: 1 MW
Rated Capacity: 7.2 MWh
Max Power: 1.2 MW (< 3 hr)

Assumed Duty Cycle:
2500, 100% DOD cycles over 8.3 yr +
2000, cycles avg 95% DOD over 6.7 yr
Equivalent to 300 cy/yr

Public Information Website

www.storagemonitoring.com

NYSERDA/DOE Joint Energy Storage Initiative Demonstration Projects - Microsoft Internet Explorer

Back File Edit View Favorites Tou Address http://www.storagemonitoring.com/nyserda-doe/storage-home.shtml#battery Go

at higher output for optimum efficiency and lower emissions.

Primary participants:

- Beacon Power (equipment manufacturer)
- NationalGrid (utility)
- EnerNex Corporation (data acquisition and monitoring)

NAS Battery Peak Reduction Demonstration

The NAS Battery Peak Reduction Demonstration project at a Long Island bus depot facility exhibits the use of a sodium-sulfur (NAS) battery system that shifts compressor peak load to off-peak capacity and provides emergency backup power. The primary application will be to supply up to 1 MW of power to a natural gas compressor for six to eight hours per day, seven days per week, especially during the summer peak period. The natural gas compressor provides fuel for buses that will replace diesel-powered buses.

Primary participants:

- ABB, Inc.
- New York Power Authority (NYPA)
- NGK Insulators, Ltd. (battery manufacturer)
- EnerNex Corporation (data acquisition and monitoring)

Gaia Power Technologies | Beacon POWER | nationalgrid | ABB | New York Power Authority | NGK

Funded by the US DOE Energy Storage Systems Program. Managed by Sandia National Laboratories.

Sandia is a multiprogram laboratory operated by Sandia Corporation, a Lockheed Martin company, for the United States Department of Energy's Nuclear Security Administration under contract DE-AC04-94AL85000.

Interconnection Issues

- Keyspan review
- Grounding transformer
- Redundant GE F60 relay
- Direct Transfer Trip

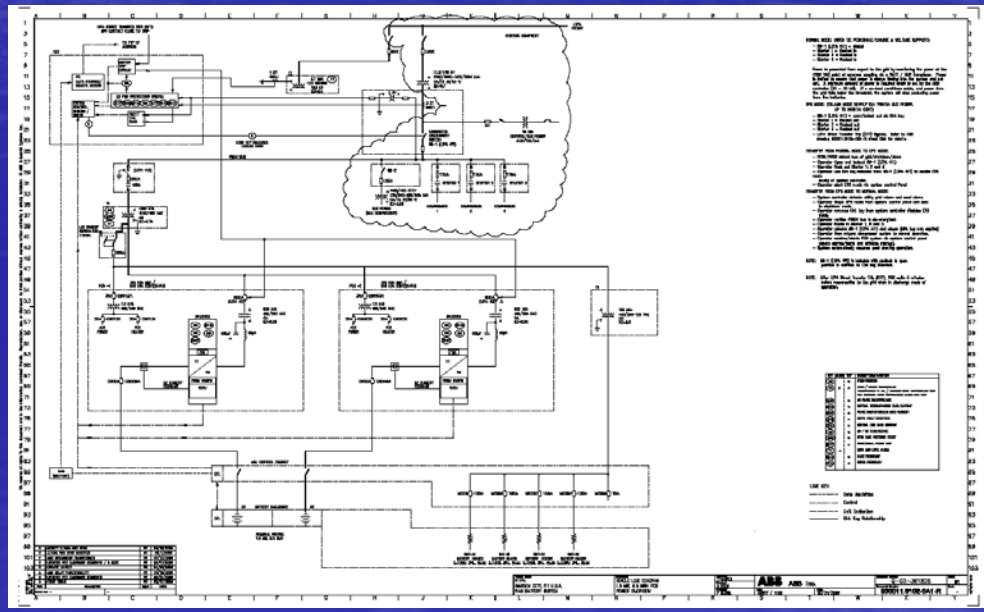

Emergency Power Supply and Backup Power Issues

- PCS units will not operate in parallel
- PCS units not configured to handle compressor motor surge current
- Compressor start and load test analysis underway to determine options
- Backup power for battery thermal management system

Current Project Status

- Batteries, PCS and BOP installed
- Grounding transformer specified, to be installed by December
- Direct Transfer Trip specified, to be installed by November
- Initiate system start up in December
- Initiate monitoring in January
- Monitoring period is 18 months

THANK YOU