Universal Converter Using Silicon Carbide

Funded by the Small Business Innovation Research (SBIR) program of the U.S. Department of Energy (DOE/ESS) and managed by Sandia National Laboratories (SNL).

Contractor: **Peregrine Power LLC**
Dallas A. Marckx (PI)
503.682.7001
dmarckx@peregrinepower.com

Outline of Presentation

- Peregrine
- Prior projects with SiC
- Objectives and work plan
- Adjustments to work plan
- Critical issues
- Activity now underway
- Path to the market

Peregrine

- Near Portland, Oregon
- Power electronics
- Focus primarily on high power
- Further focus on SiC

Human Resources

- Small, but growing in-house staff
- Plus 40 consultants with specialties important to power electronics
- Relationships with research institutes
- Relationships with industrial companies

Allied Research Institutions

- Oregon State University
- University of Tennessee
- University of Wisconsin
- Oak Ridge National Lab
- National Renewable Energy Lab
- Pacific Northwest National Lab
- Others are probable

Dallas Marckx – Managing Member

- BS engr, MS engr, MBA, law degrees
- 35 years covering all business disciplines
- Specialist in power electronics applications
- Specialist in funding of new companies
- Founder and CEO of prior power electronics company for 11 years

Prior Company

- Organized in 1988
- $11.6 million in venture capital in 1988
- Plus $14 million in R & D contracts (22+engineers)
- Three strategic relationships with major companies
- Introduced power electronics product line
- Sale to Square-D (Schneider) in late-2000
- Product still sold

Project Activity

- 2 Navy projects completed early in 2004
  - Linear actuator (with OSU) – Navy STTR
  - High flux heat sink (with OSU) – Navy STTR
- 3 projects being completed
  - SiC in linear actuators – Navy SBIR
  - SiC converters for mobile power – Army SBIR
  - SiC converters for wind (with UTenn) – NREL
- 3 new projects
  - SiC converter – USDOE SBIR (this presentation)
  - Wave power (with OSU) – USDOE STTR
  - Above Army project extended into Phase II

Most Pertinent Past Work

- Project for NREL wind turbine program
- SiC Converter for VS 1.5 MW turbine
- One-sixth the size of existing converter
- Lower losses, higher temperature (300C)
- 4,160 VAC highly recommended
- Enabled by SiC
- Final presentation is available

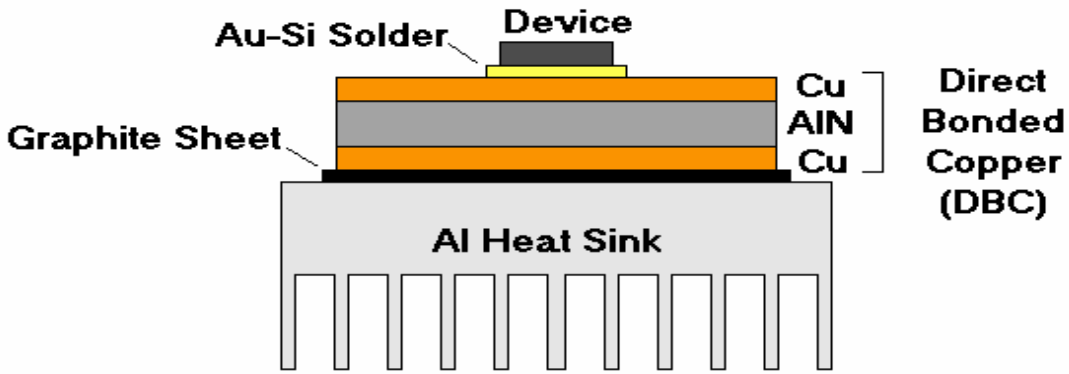

Packaging Concept 1

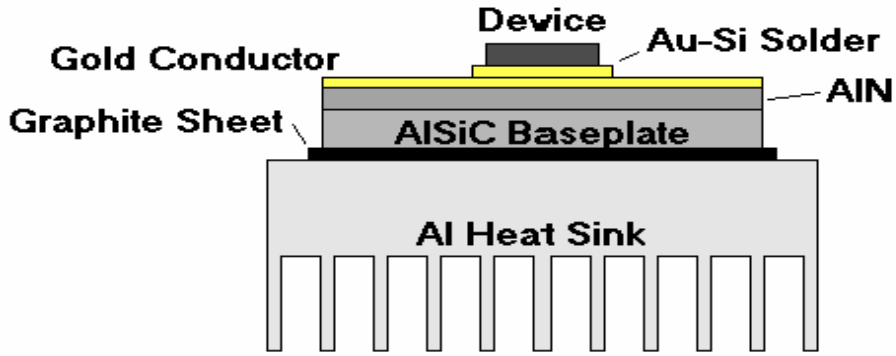

Packaging Concept 2

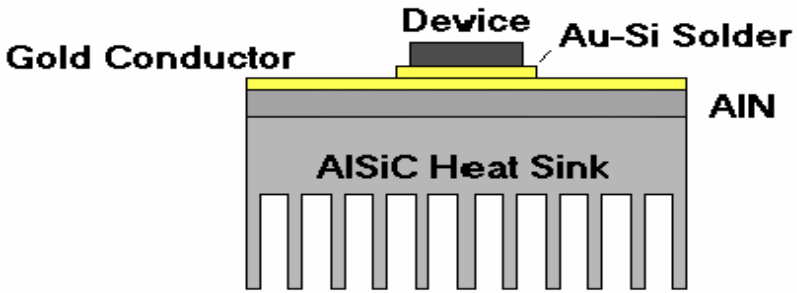

Packaging Concept 3

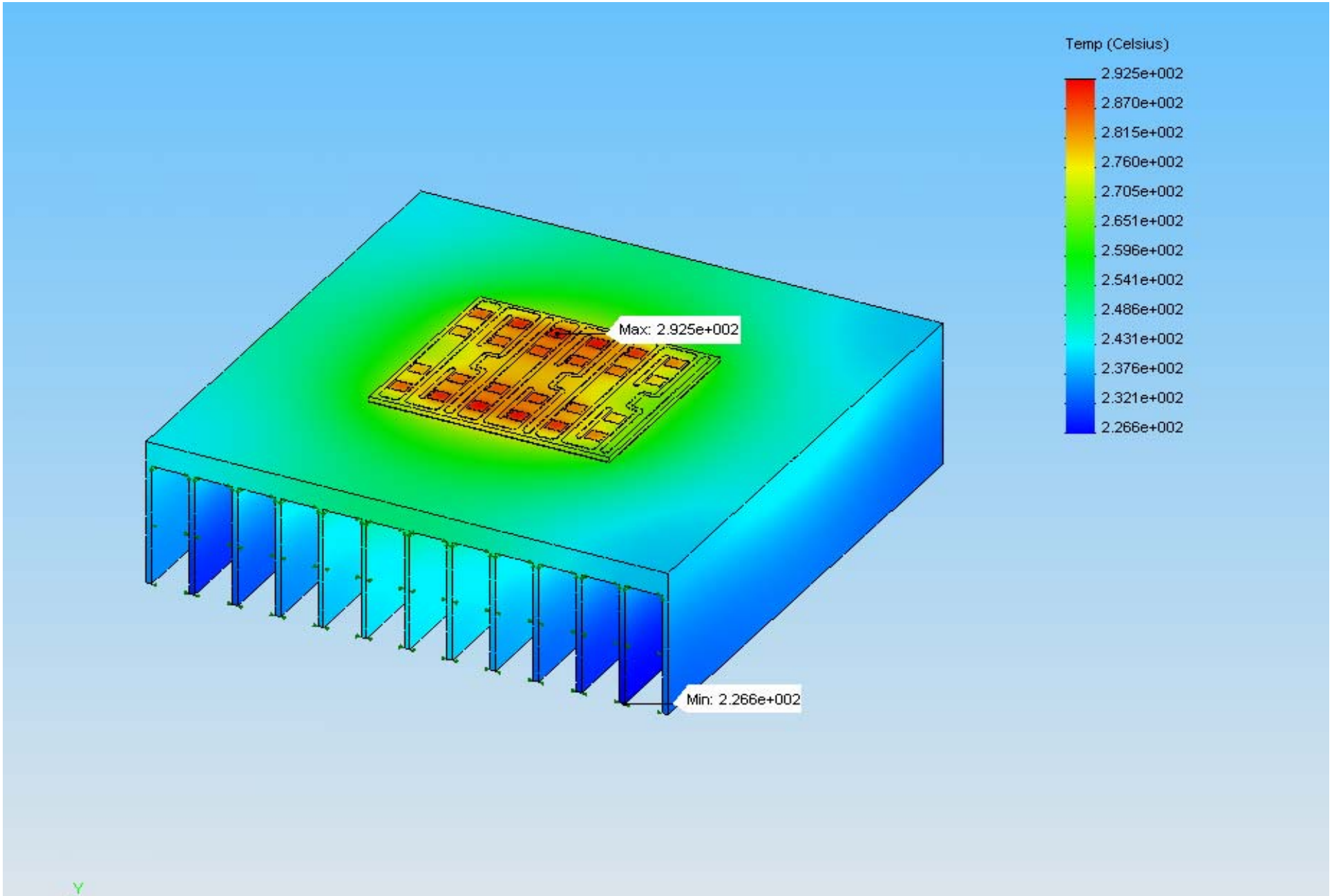

Figure 7. Concept 1 – 3D Thermal Profile

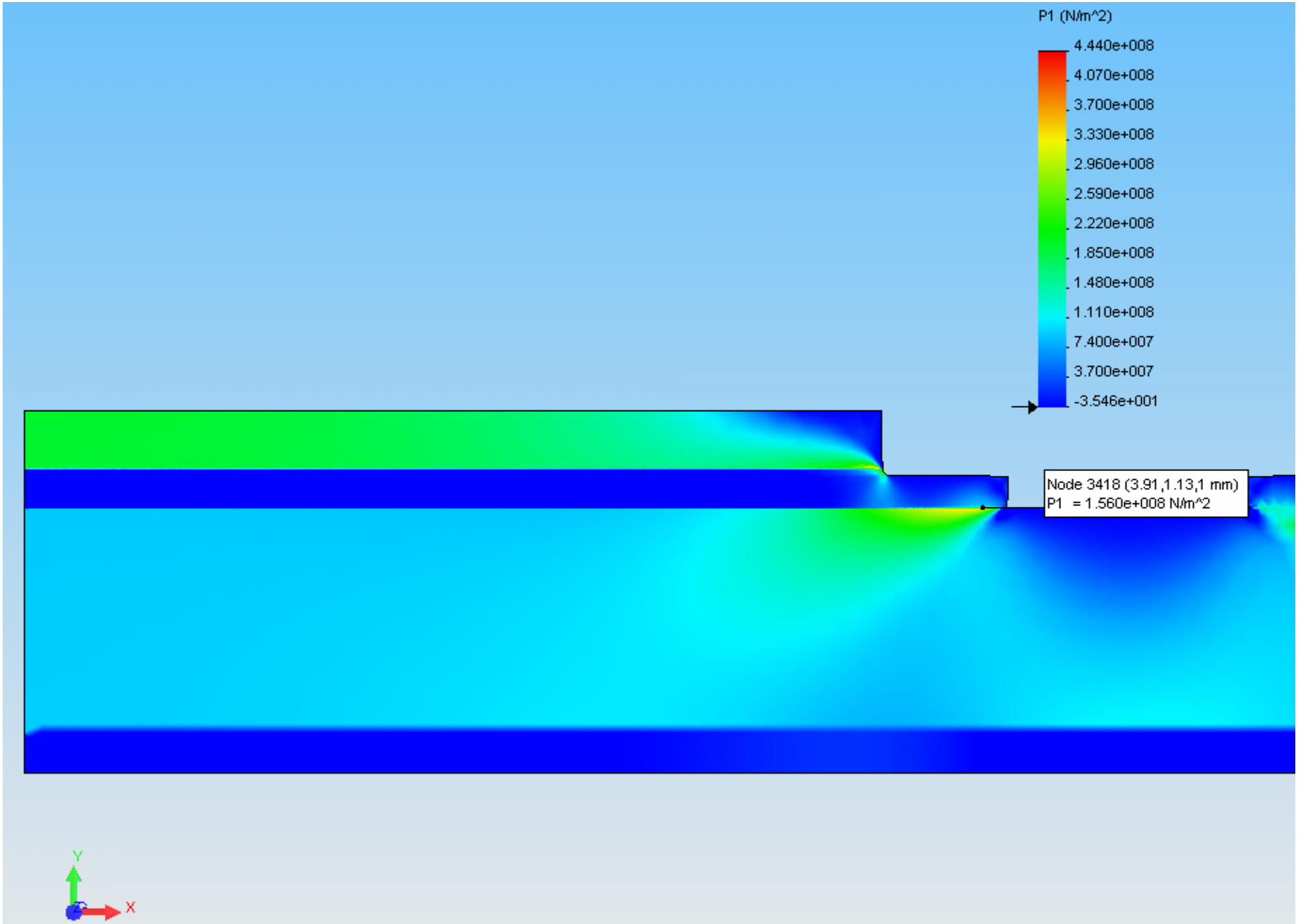

Figure 8. Concept 1 – 2D Stress Profile of Ceramic Substrate

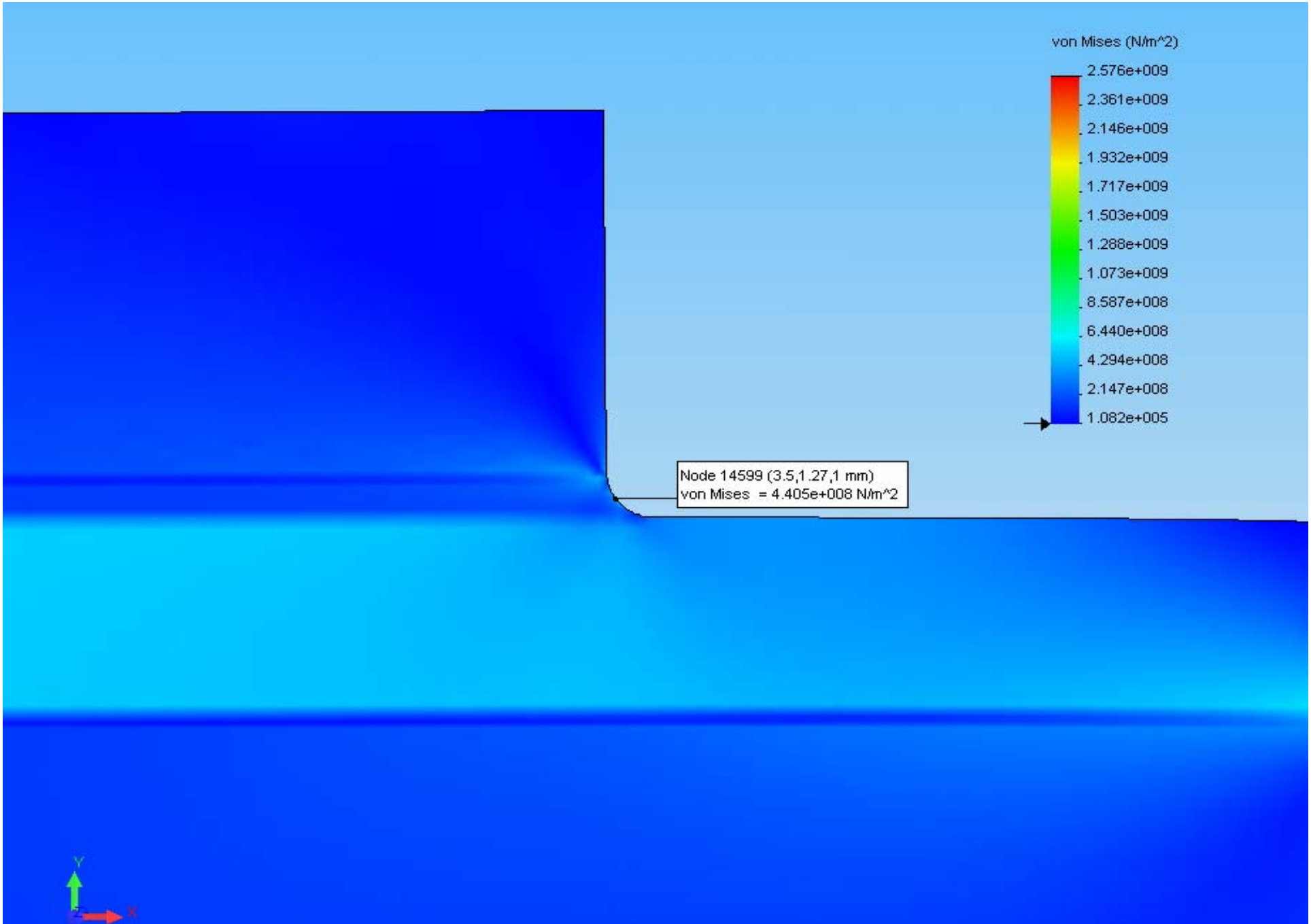

Figure 9. Concept 1 – 2D Stress Profile of Solder Layer

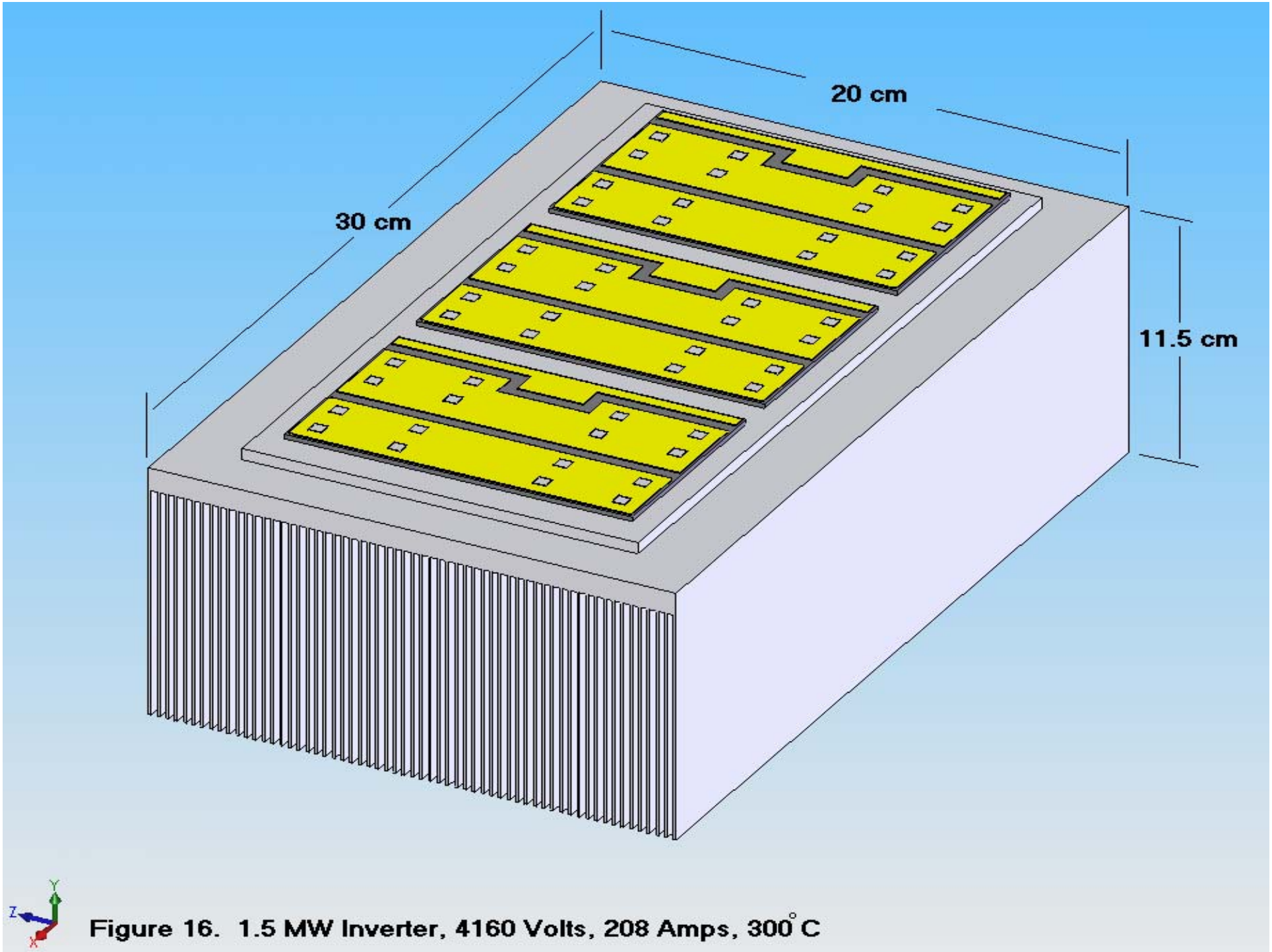

Figure 16. 1.5 MW Inverter, 4160 Volts, 208 Amps, 300°C

Original Objectives

- **Overall project objective**
  - Demonstrate real 500+ kW converter
  - Smaller, more efficient, lower cost, etc
- **Phase I objectives**
  - 10 kW scalable design
  - Compact, 3-phase, 480 volts VAC
  - 250 degrees C or more
  - Characterize converter design

Original Work Plan (Balanced Converter Design)

1. Meet with DOE (Sandia)
2. Characterize devices and converter
3. Design semiconductor block
4. Design gates and controls
5. Design output filter
6. Assess & report

Proposed Topology

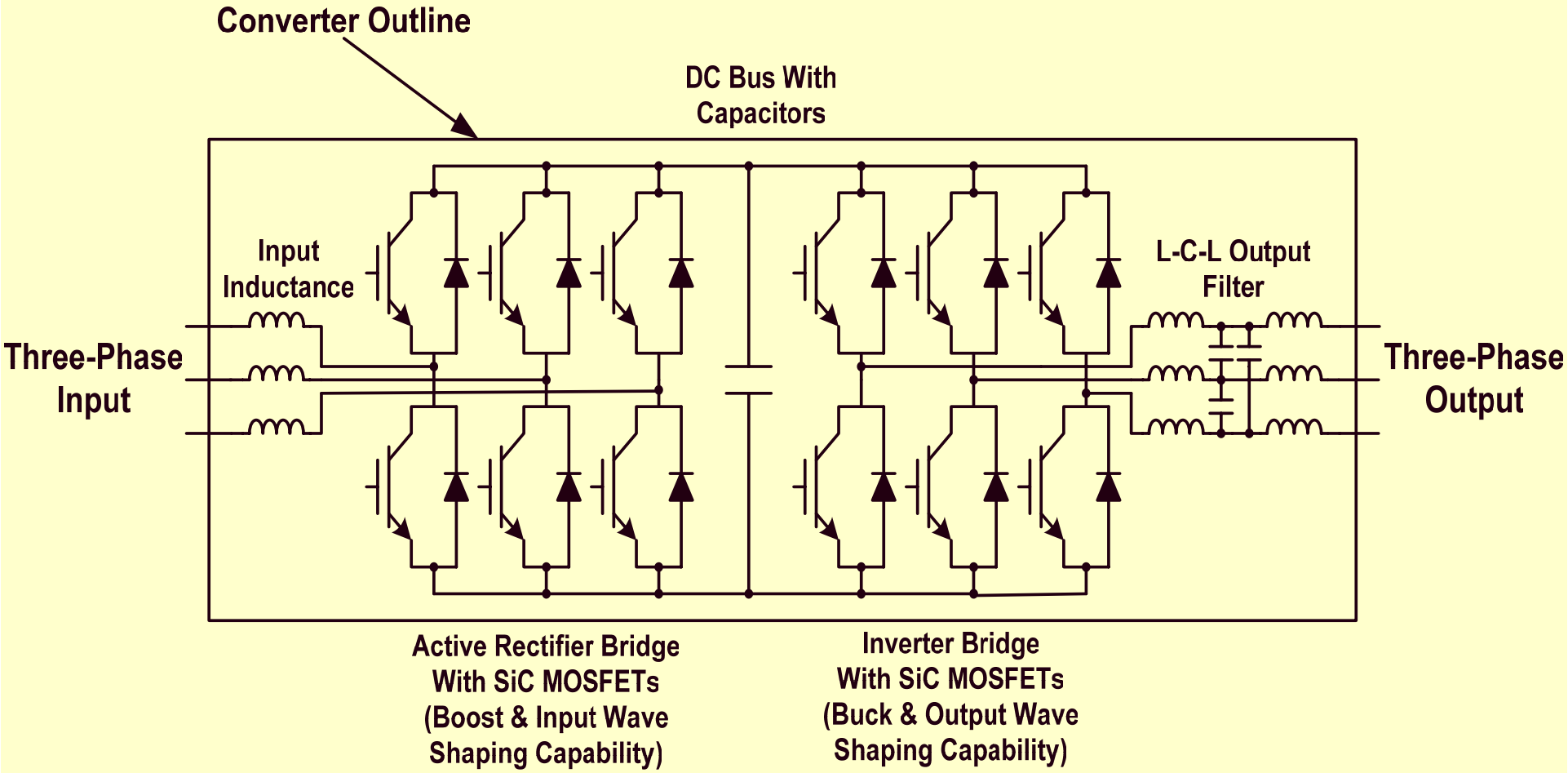

Project Organization

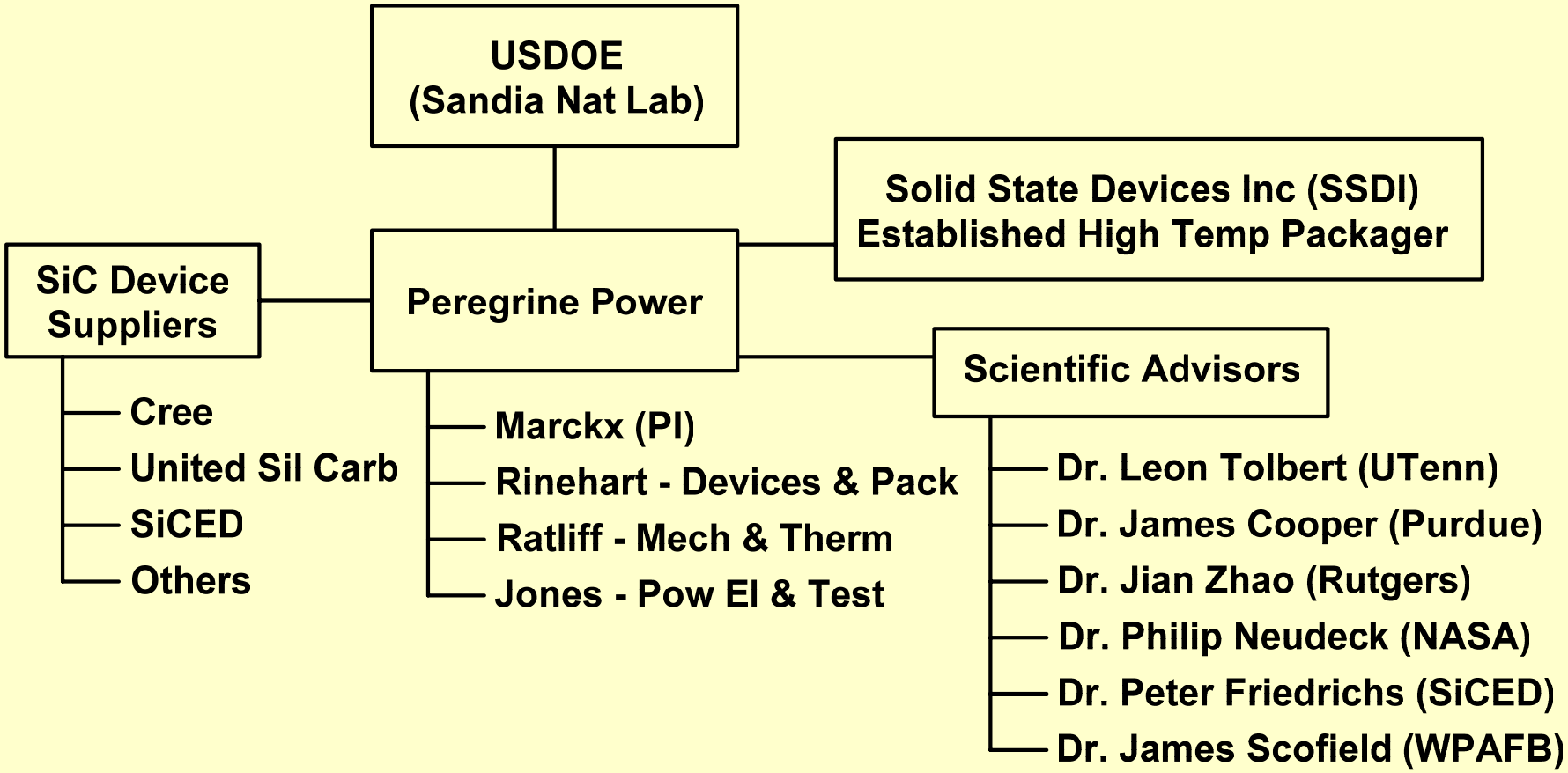

Dissatisfaction with Past Work

- **Three projects on SiC finished since proposal submitted**
- **Much farther along than anticipated**
- **Troubling issues:**
  - Too much modeling and hype
  - High temperature performance not known
  - Wrong type of device examined
  - Cannot design converter without more data

Adjustment in Approach

- Focus on high power (over 1 MW)
- New project philosophy
  - Focus on critical issues
  - Do not carry out balanced converter design
- Critical issues represent the critical path to success anyway
- Strong bias toward testing hardware (too much theory already)

What Are the Critical Issues?

- High temperature performance, particularly loss of performance at high temperature
- Reliable high temperature packaging of SiC devices, particularly with thermal cycling
- High temperature solutions for everything else in a converter (discuss relevance)
- High voltage device maturity
- Achieving high volume/low cost (piggy-back on the drive business?)

Specific Phase I Work Plan Adjustments

- Run static and dynamic tests up to 300 degrees C to get real performance data
- Test selected aspects of high temperature package – integrity, not cycling
- Review high temperature solutions for other components: gate circuits, DC caps and controls
- Re-characterize converter with new data

Work Now Underway

- Select and buy appropriate SiC devices
- Carry out high temperature device mounting
- Plan and set up devices tests
- Review high temperature limitations of other electronic components

Select Appropriate SiC Devices

- Three candidates: BJTs, MOSFETS & JFETs
- MOSFET is sharply limited in temperature, not acceptable
- JFET is normally-on, voltage capability limited, marginally acceptable
- BJT is best, but uses current gating

Device Acquisition Activity

- Why not test a variety of devices?
- P.O. for BJTs and Schottkys from Cree
- P.O. for BJTs from United Silicon Carb
- P.O for JFETs from SiCED
- BJTs being given by TranSiC
- Met with SSDI on high temp mounting
- Drift in gain expected for BJTs

High Temperature Packaging

- **Peregrine has its own high temp design**
- **Has decided to contract portions to SSDI**
  - Learn from SSDI's extensive experience
  - Potential future manufacturing relationship
  - Has good grasp of economics

Planning of the Tests

- Larry Rinehart and Matt Jones are key here
- Testing to be carried out directly by Peregrine
- Equipment is present
- Gate drives being designed or purchased
- Testing should begin in 4 to 6 weeks

Analysis of High Temperature Capability of Electronics Generally

- Ls, Cs, Rs, ICs, PCBs, etc
- Builds on past work
- WPAFB (Scofield) is important here
- Very disappointed as to digital processing capability (SOI)

Path to the Market

- Civilian applications – must associate with drive industry (largest application of power electronics in world at $12 billion)
- Military applications – must associate with major military contractors

Potential Drive Partners

- **Strong past relationships in drive industry**
  - Emerson – largest motor manufacturer in world
    - Control Techniques, drive subsidiary
    - Switched Reluctance Drives Ltd
  - Rockwell – largest drive manufacturer in US
  - Robicon, others
- **Major markets owned by established firms**
- **Niches owned by companies like Peregrine**

Peregrine's Targeted Drive Niche

- **High temperature drives**
- **Deep well drilling**
- **Must associate with oil service companies**
  - Halliburton – good contact now
  - Schlaumberger – will contact soon
- **Include Sandia's work – Dr. Randy Normann**

Potential Military Partners

- L3Communications (Power Paragon unit)
- Northrop Grumman (Navy apps)
- Solid State Devices Inc