The Zinc/Bromine Advanced Battery Program

←Home

←Agenda

PV-Zinc/Bromine Battery
Greenpoint Facility - Bronx, NY

- US Department of Energy, DEER (Energy Storage Program Funding)
- Sandia National Laboratories (Cost shared contract)
- PowerLight Corporation (Test site, solar panels)
- SatCon Power Systems Canada, Ltd. (Power conversion system)
- ZBB Energy Corporation (Battery system)
- Gridwise Engineering (Data Collection and Analysis)

100 kWh Battery Goals

- Develop 50 kWh battery module with independent PCS
- Integrate battery with 50 kWac PV system
- Absorb weekend PV production
- Dispatch during the week to reduce customer load

Zinc/Bromine Battery Module

- Integrated PCS
- 50 kWh
- 25 kW/30 kVA
- 208 Vac/60 Hz
- 48” x 48” x 84”

100 kWh Battery System

Greenpoint Facility Load

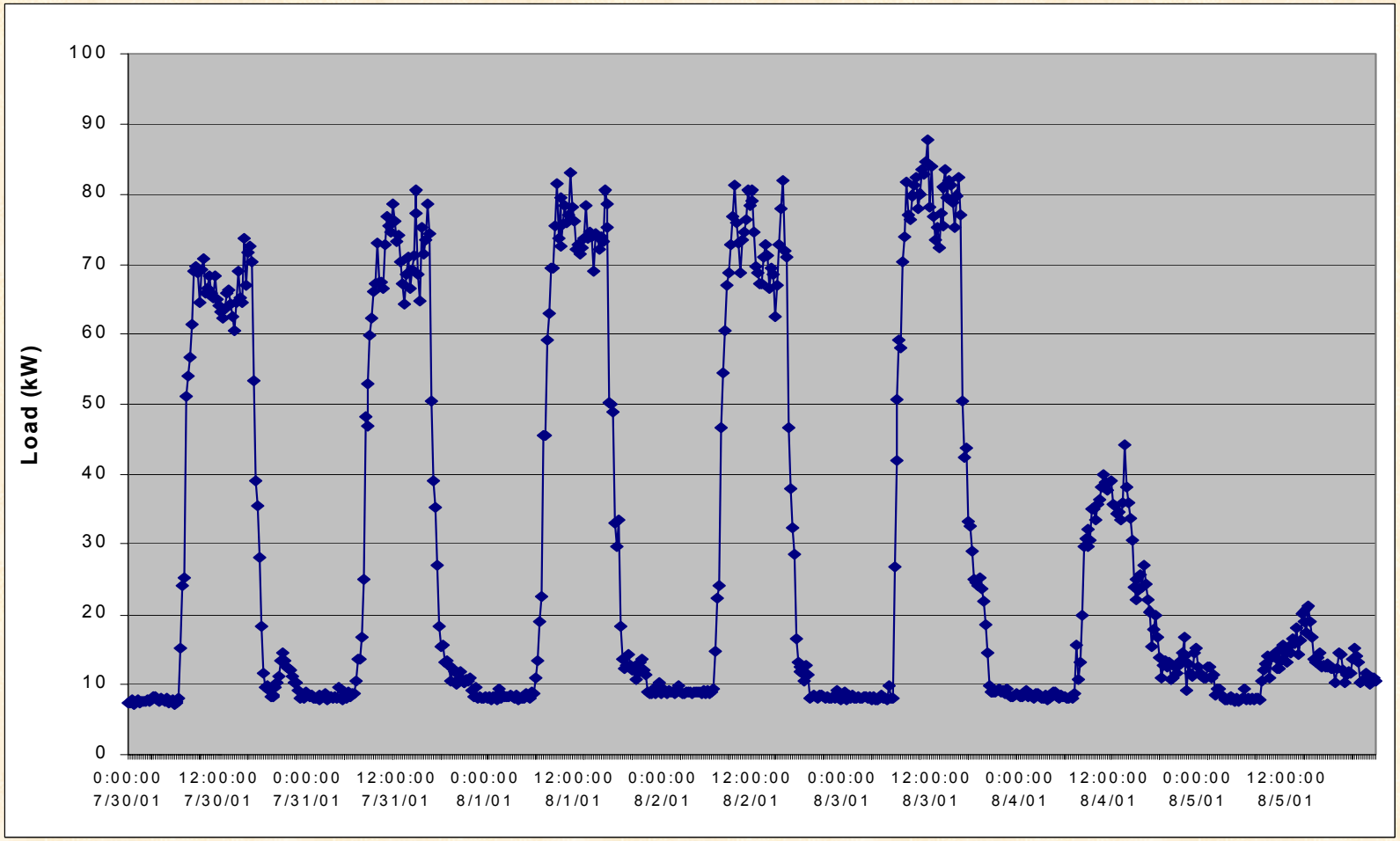

Greenpoint DAS Layout

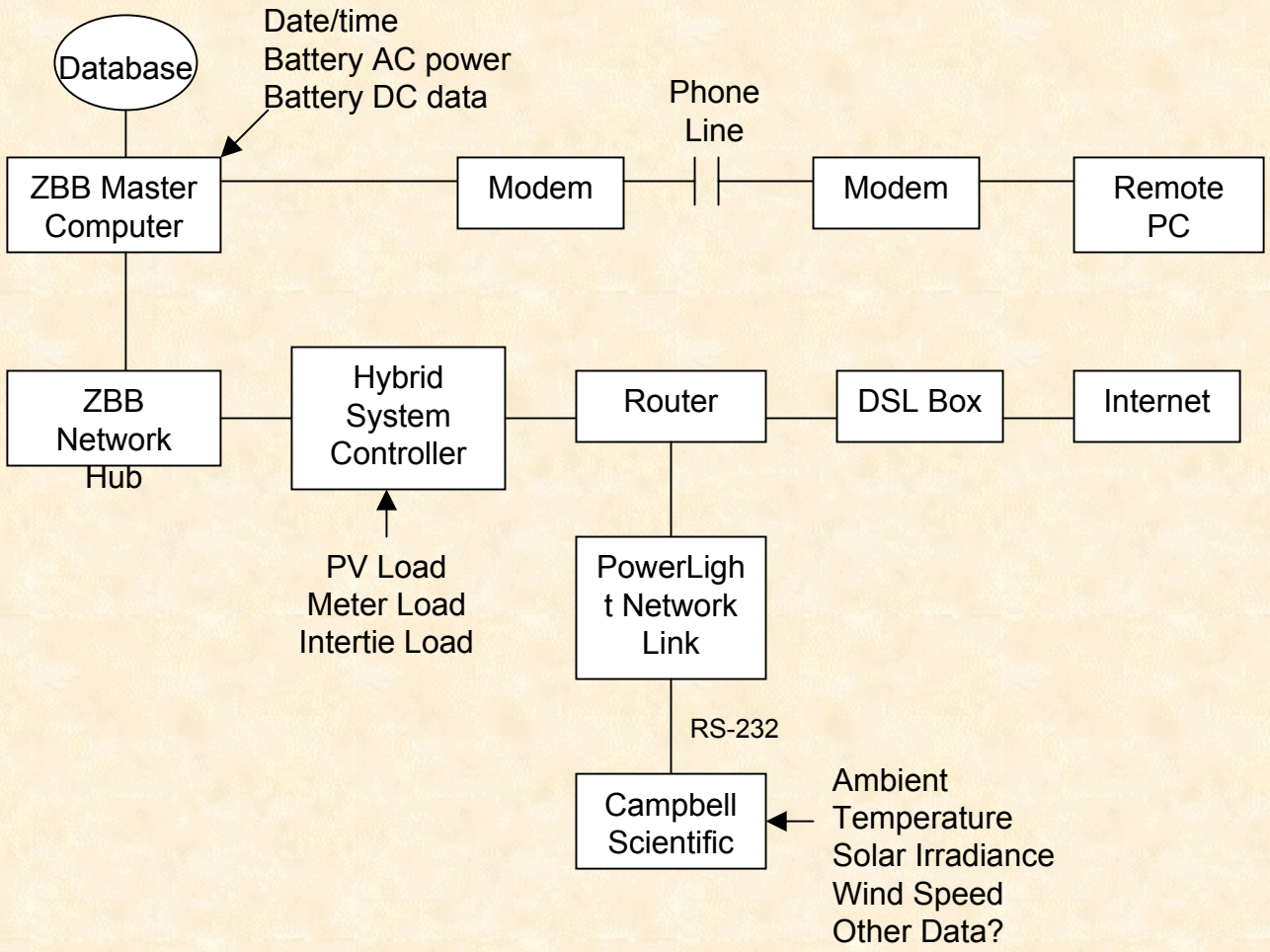

Constant Current Discharge

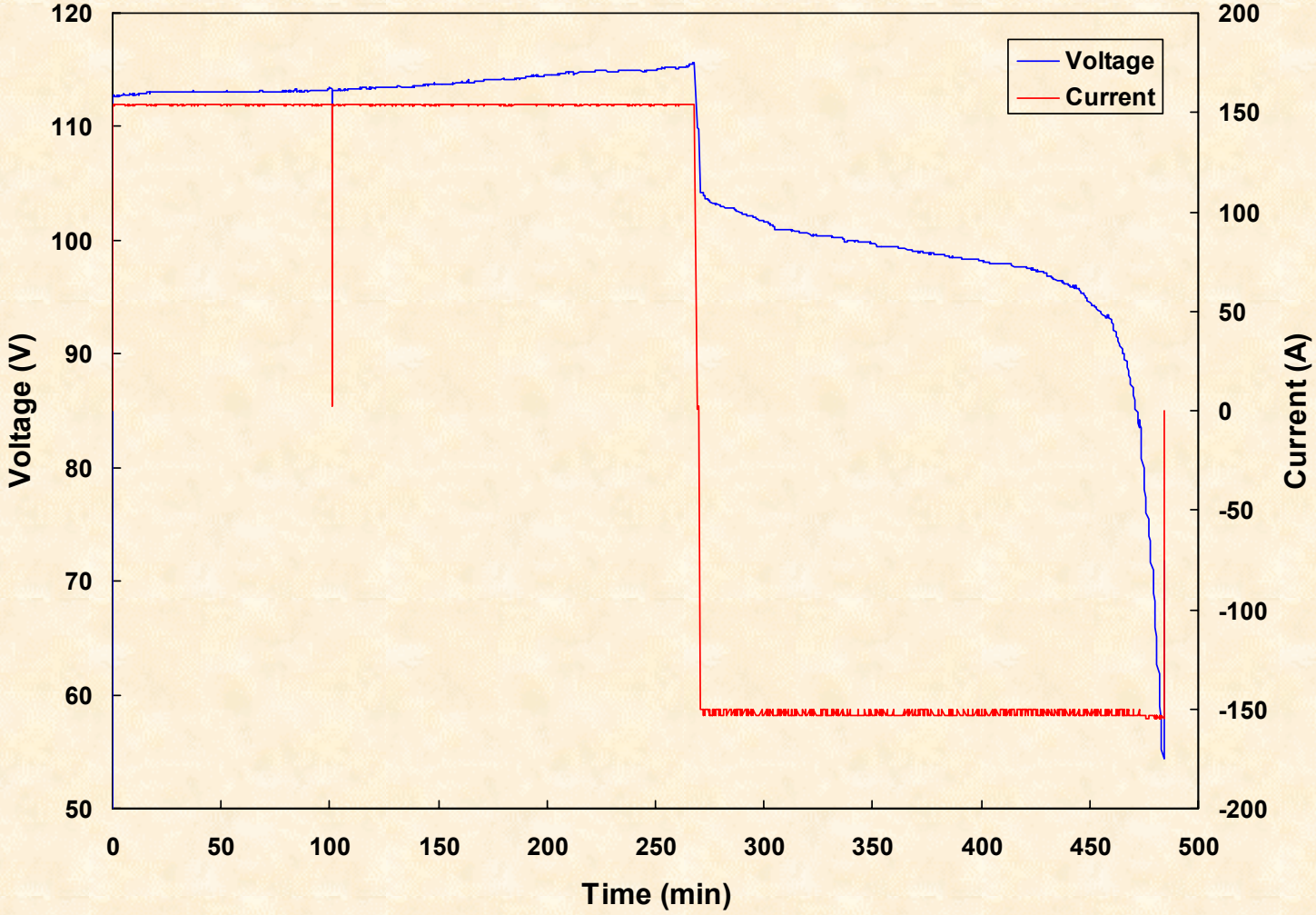

Variable Power Discharge

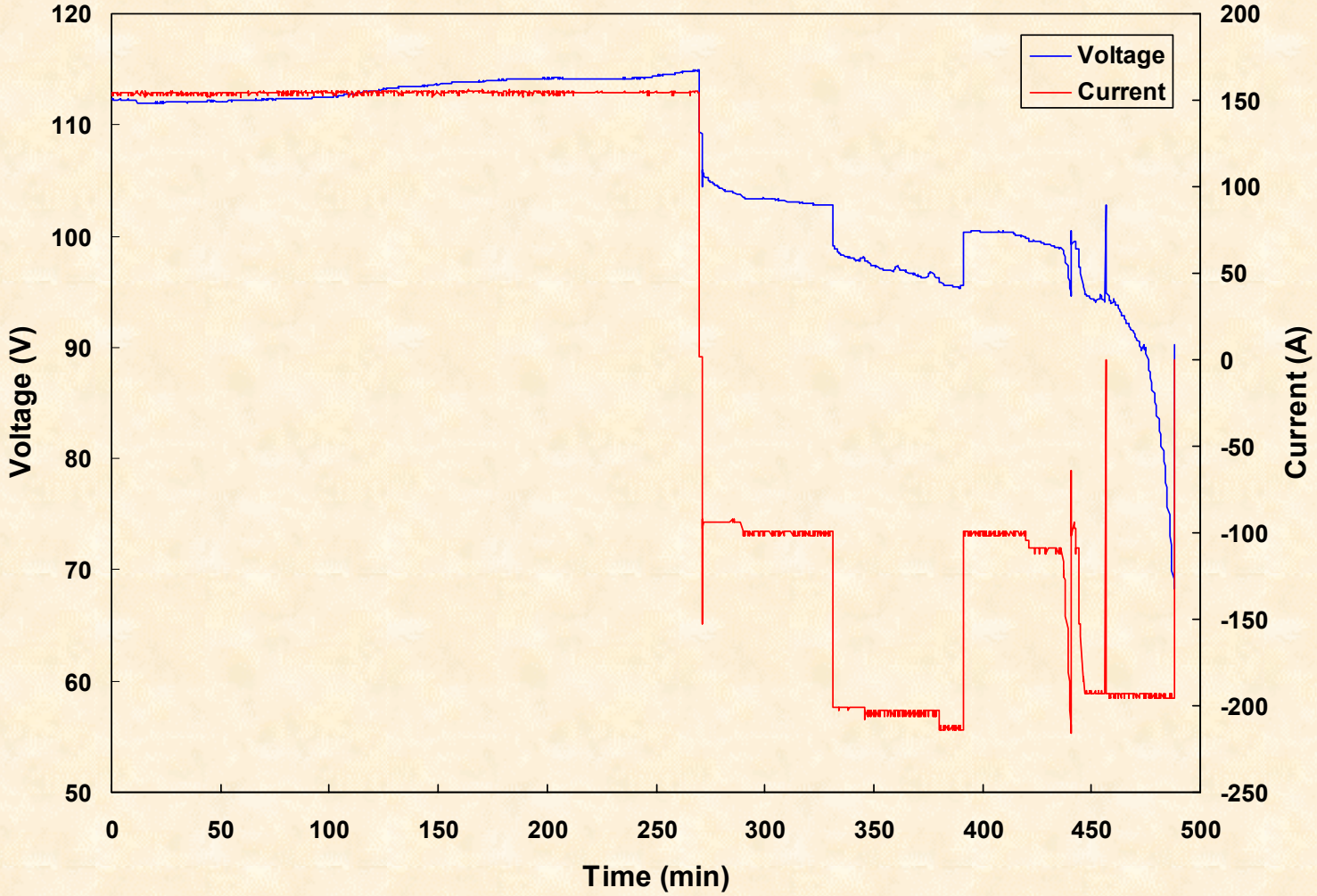

100 kWh Summary/Future Work

- Summary of results
  - Factory/Witness testing in progress
  - Online control of PCS demonstrated
  - Charge/discharge capability based on any input (i.e. uility, solar information)
  - Demonstrated remote control of two batteries as single system
- Future work
  - Evalute optimum operation of multiple batteries
  - Installation mid Dec. 2002

400 kWh ABESS Demonstration

- US Department of Energy, DEER Office of Power Technologies (Energy Storage Program Funding)
- Sandia National Laboratories (Cost shared contract)
- The Detroit Edison Company (Test sites, transformer, data collection)
- SatCon Power Systems Canada, Ltd. (Power conversion system)
- ZBB Energy Corporation (Battery system)
- Gridwise Engineering (Data Collection and Analysis)

400 kWh Demonstration Goals

- Demonstrate Remote Monitoring and Control
- Demonstrate Automated Dispatch
  - respond to real time load readings
  - develop peak shaving algorithm
- Demonstrate Longevity

400 kWh ABESS

- 400 kWh Capacity
- Two independent strings
- 480 to 0 V DC
- 0 to 300 amp discharge per string
- 2 to 10 hour discharge
- 20’ x 8’ x 9’6”
- Approx. 40,000 lbs.

Detroit Edison
Lum Site Description

- Peak shaving application
- 65 miles north of Detroit, MI
- 4.8 kV Distribution Line
- 800 kVA Transformer near capacity
- Load expected to exceed transformer rating due to summer peaking.

Lum Peak Shaving Site

Remote Access and Control

- Dial-up/call back control
- Server device/modem/telephone line
- Data was remotely downloaded in proper format
  - Telephone lines are continuous cost and relatively slow for data transfer
- Battery has been operated from remote location

Automated Dispatch

- PCS software modification needed for load following
- Peak shaving using block load discharge
- Discharge initiated under following conditions:
  - Load exceeds 400 kW
  - Ambient Temp > 90°F
  - Time = 7:00 p.m.

Substation Transformer Load

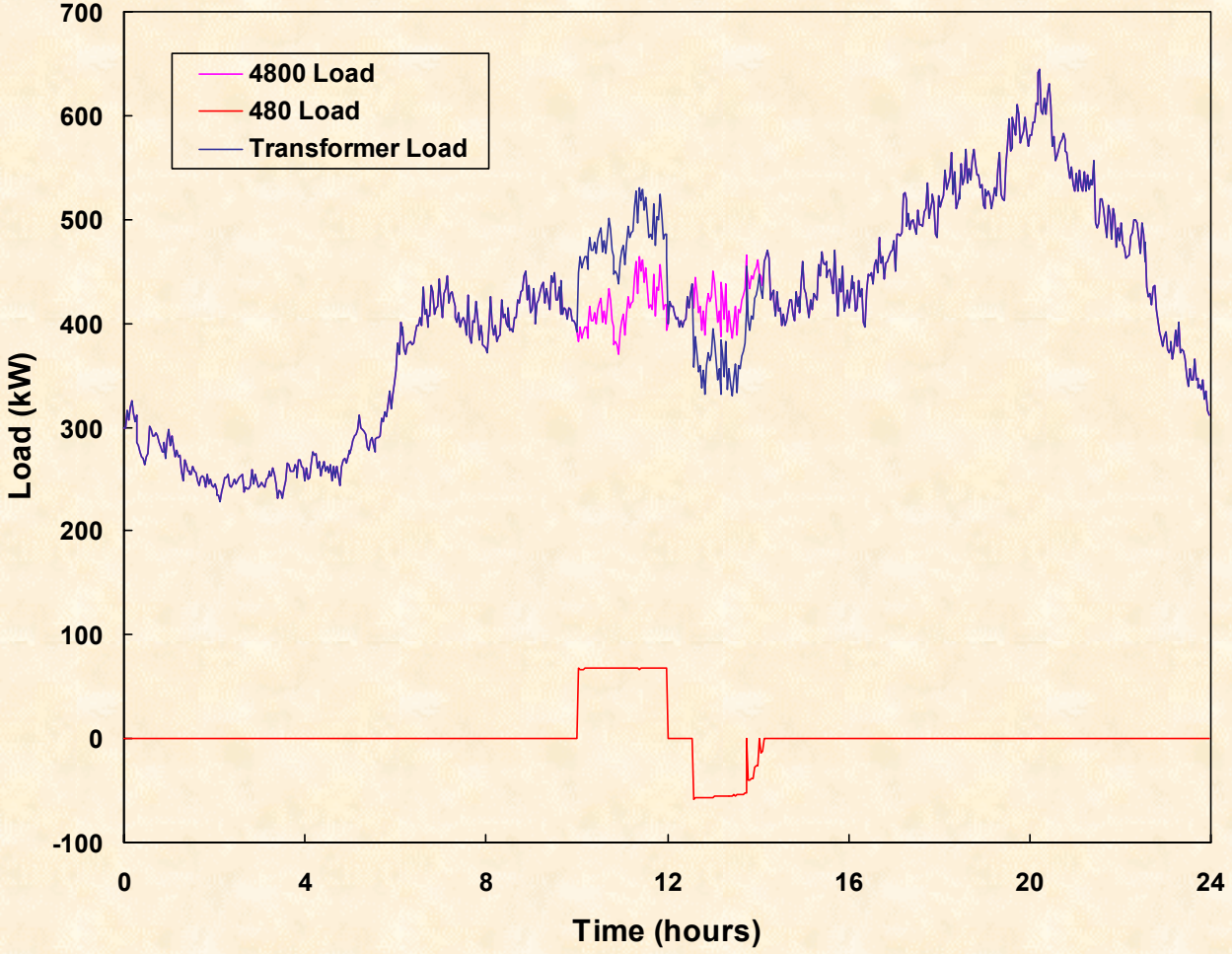

Simulated Peak Shaving

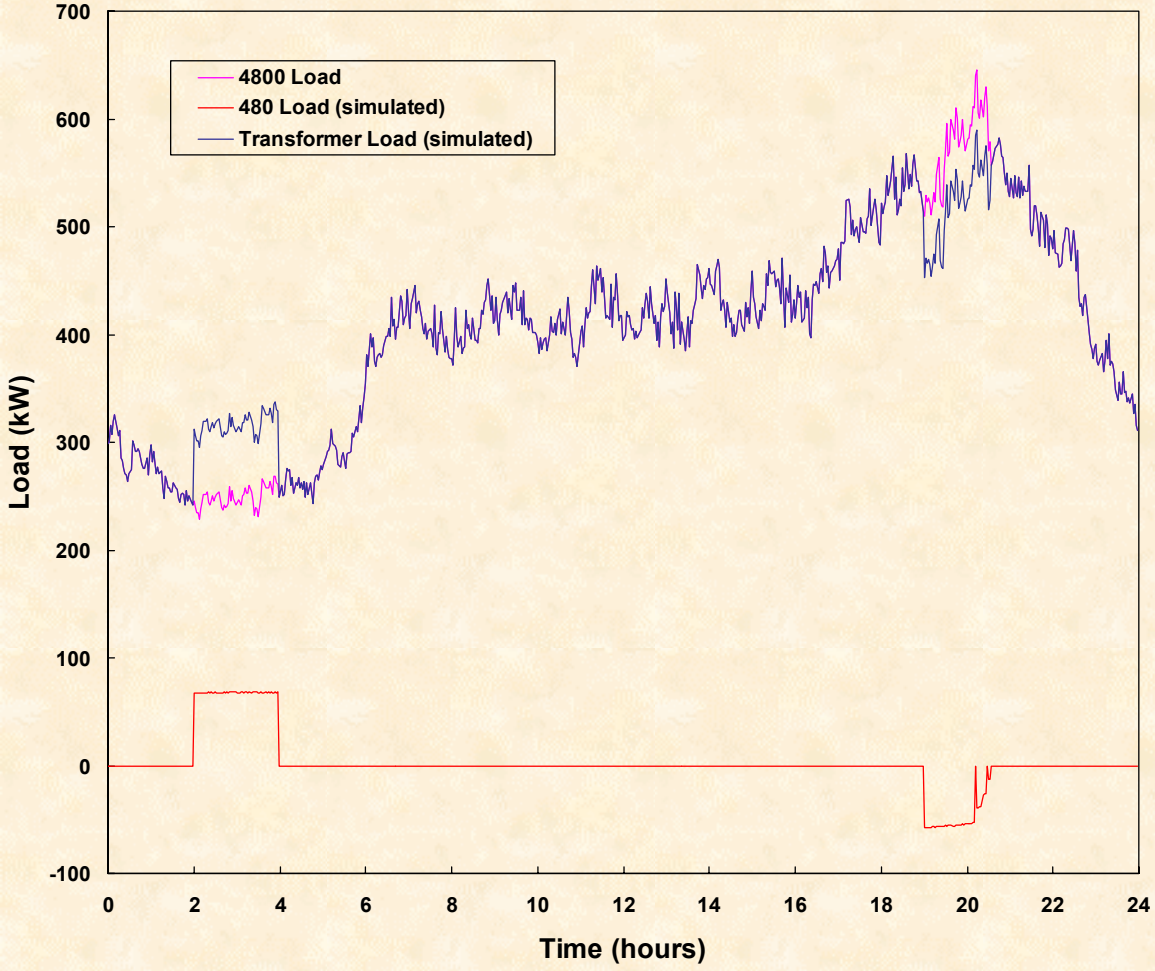

400 kWh Summary/Future Work

- Summary of results
  - Operated battery from remote location
  - successfully downloaded data in proper format (remote)
  - Demonstrated automatic dispatch
- Future work
  - Winter testing (remote operation, low temperature)
  - Modify PCS software (load following, serial communications and control)
  - Use local internet connection for DAS control

↑Top

←Agenda