US009009640B1

(12) **United States Patent**
Atcitty et al.

(10) **Patent No.: US 9,009,640 B1**
(45) **Date of Patent: Apr. 14, 2015**

(54) **AUTOMATIC COMPUTATION OF TRANSFER FUNCTIONS**

(71) Applicant: **Sandia Corporation**, Albuquerque, NM (US)

(72) Inventors: **Stanley Atcitty**, Albuquerque, NM (US); **Luke Dale Watson**, Savannah, MO (US)

(73) Assignee: **Sandia Corporation**, Albuquerque, NM (US)

(*) Notice: Subject to any disclaimer, the term of this patent is extended or adjusted under 35 U.S.C. 154(b) by 0 days.

(21) Appl. No.: **13/921,110**

(22) Filed: **Jun. 18, 2013**

(51) **Int. Cl.**
G06F 17/50 (2006.01)

(52) **U.S. Cl.**
CPC ***G06F 17/5009*** (2013.01); ***G06F 17/5072*** (2013.01)

(58) **Field of Classification Search**
USPC 716/100, 106, 113
See application file for complete search history.

(56) **References Cited**

U.S. PATENT DOCUMENTS

3,973,112	A	8/1976	Sloane	
5,404,319	A *	4/1995	Smith et al.	716/103
5,444,358	A *	8/1995	Delepaut	323/222
5,689,685	A *	11/1997	Feldmann et al.	703/2
6,498,498	B1 *	12/2002	Menezes et al.	324/613
7,373,289	B2 *	5/2008	McGaughy et al.	703/14
7,454,300	B2 *	11/2008	Suaya et al.	702/65
7,552,159	B2	6/2009	Gay-Bellile et al.	
8,185,853	B2 *	5/2012	Kim et al.	716/107
8,219,374	B1 *	7/2012	Batarseh et al.	703/13
2005/0154315	A1	7/2005	Nair et al.	
2005/0186915	A1 *	8/2005	Williams	455/67.11
2008/0288201	A1	11/2008	Oettinger et al.	

OTHER PUBLICATIONS

Wasynczok, et al; "Automated State Model Generation Algorithm for Power Circuits and Systems," IEEE Transactions on Power Systems, vol. 11, No. 4, Nov. 1996, pp. 1951-1956.

* cited by examiner

Primary Examiner — Sun Lin
(74) *Attorney, Agent, or Firm* — Daniel J. Jenkins

(57) **ABSTRACT**

Technologies pertaining to the automatic computation of transfer functions for a physical system are described herein. The physical system is one of an electrical system, a mechanical system, an electromechanical system, an electrochemical system, or an electromagnetic system. A netlist in the form of a matrix comprises data that is indicative of elements in the physical system, values for the elements in the physical system, and structure of the physical system. Transfer functions for the physical system are computed based upon the netlist.

20 Claims, 13 Drawing Sheets

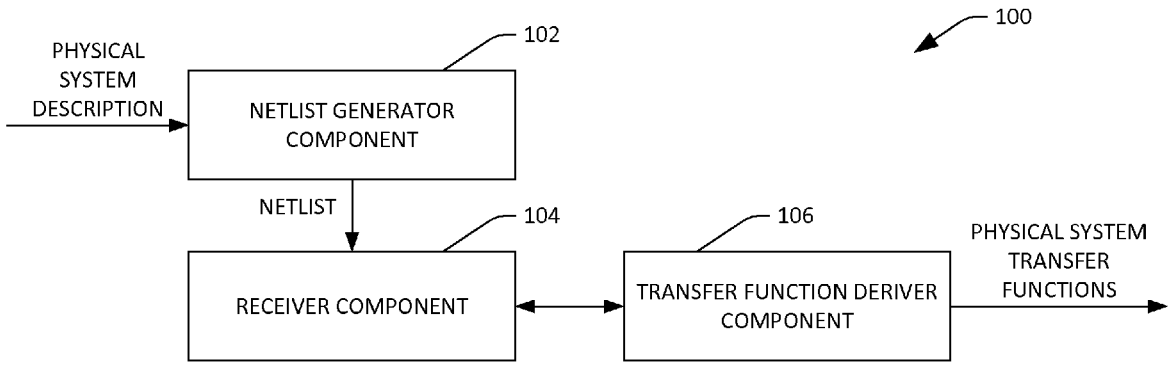

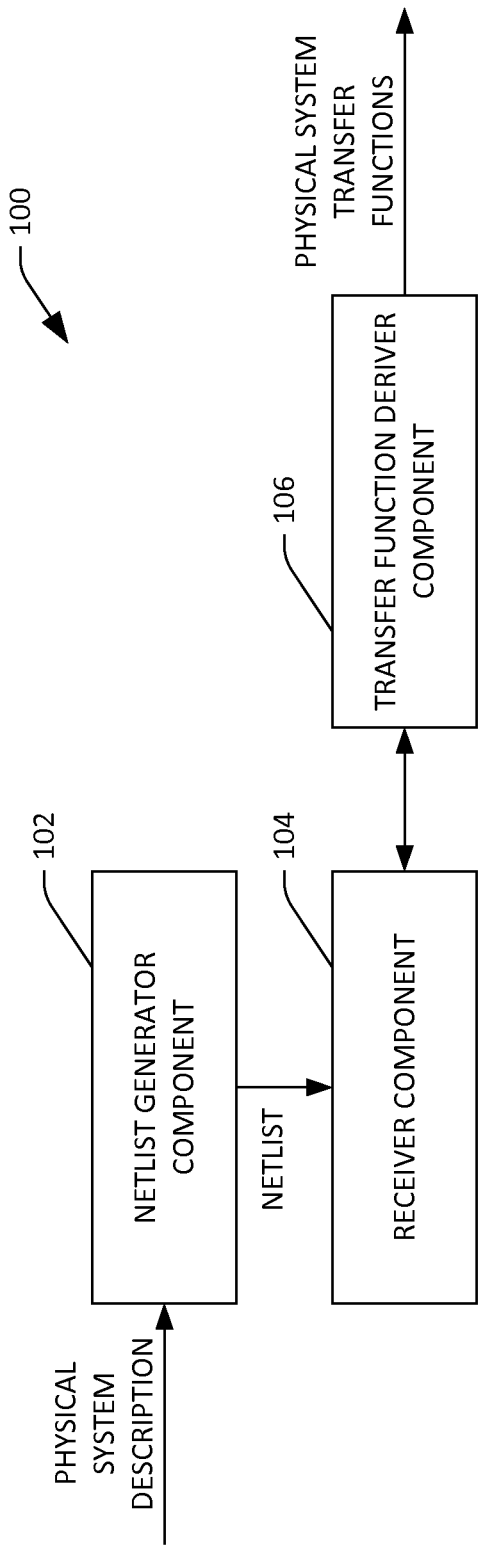
100
PHYSICAL SYSTEM DESCRIPTION
102
NETLIST GENERATOR COMPONENT
NETLIST
104
RECEIVER COMPONENT
106
TRANSFER FUNCTION DERIVER COMPONENT
PHYSICAL SYSTEM TRANSFER FUNCTIONS

FIG. 1

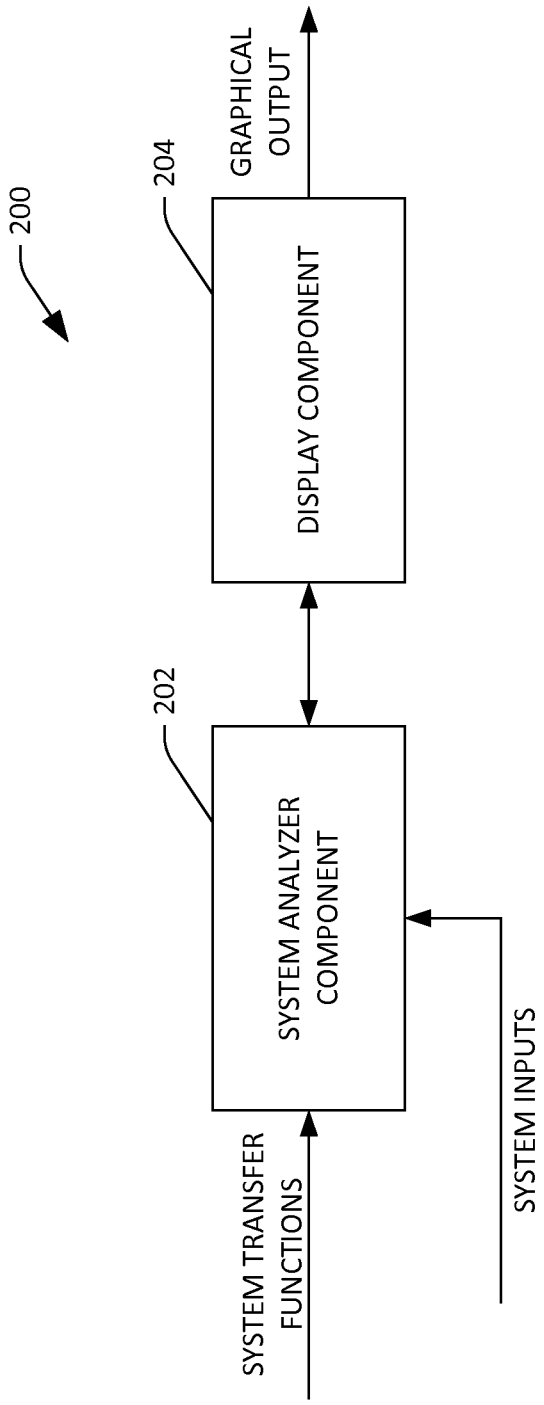
200
202
SYSTEM TRANSFER FUNCTIONS
SYSTEM ANALYZER COMPONENT
SYSTEM INPUTS
204
DISPLAY COMPONENT
GRAPHICAL OUTPUT

FIG. 2

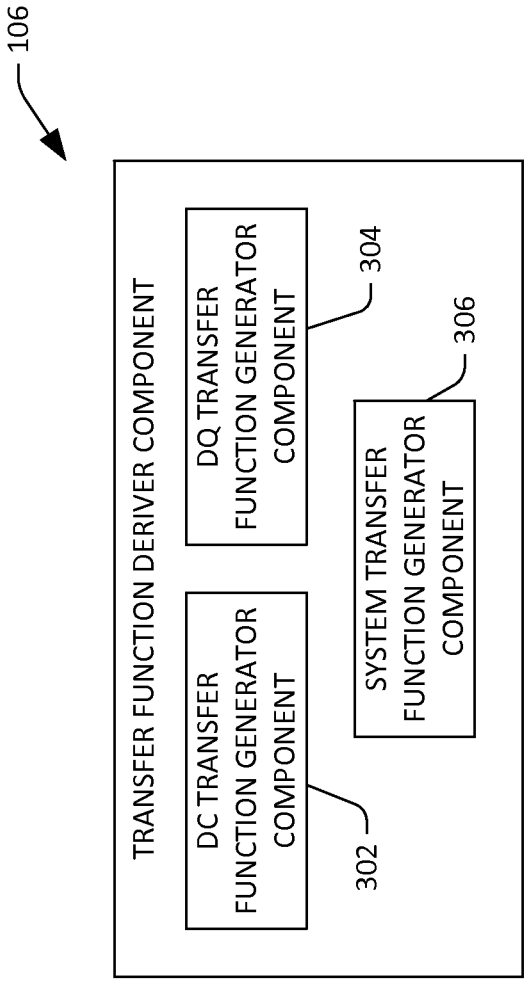
106
TRANSFER FUNCTION DERIVER COMPONENT
DC TRANSFER FUNCTION GENERATOR COMPONENT
302
DQ TRANSFER FUNCTION GENERATOR COMPONENT
304
SYSTEM TRANSFER FUNCTION GENERATOR COMPONENT
306

FIG. 3

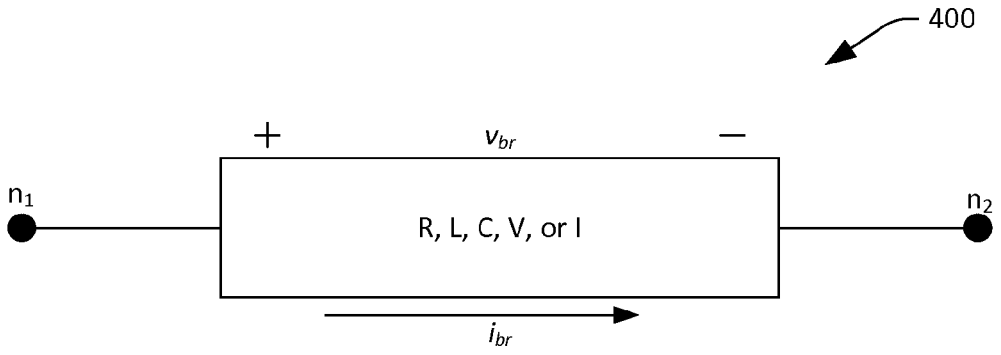
400
+
v_{br}
−
n_1
R, L, C, V, or I
n_2
i_{br}

FIG. 4

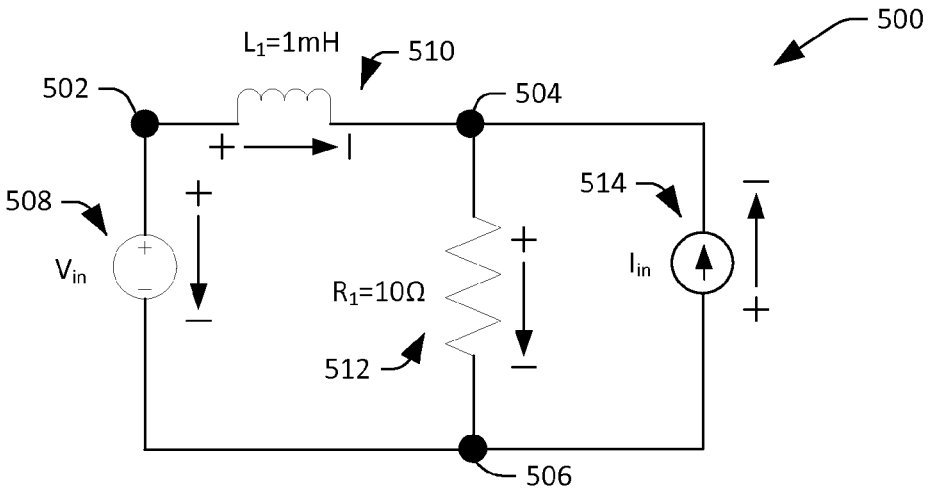
500
L_1=1mH
510
502
504
+
I
508
+
514
−
V_{in}
+
I_{in}
R_1=10Ω
−
+
512
−
506

FIG. 5

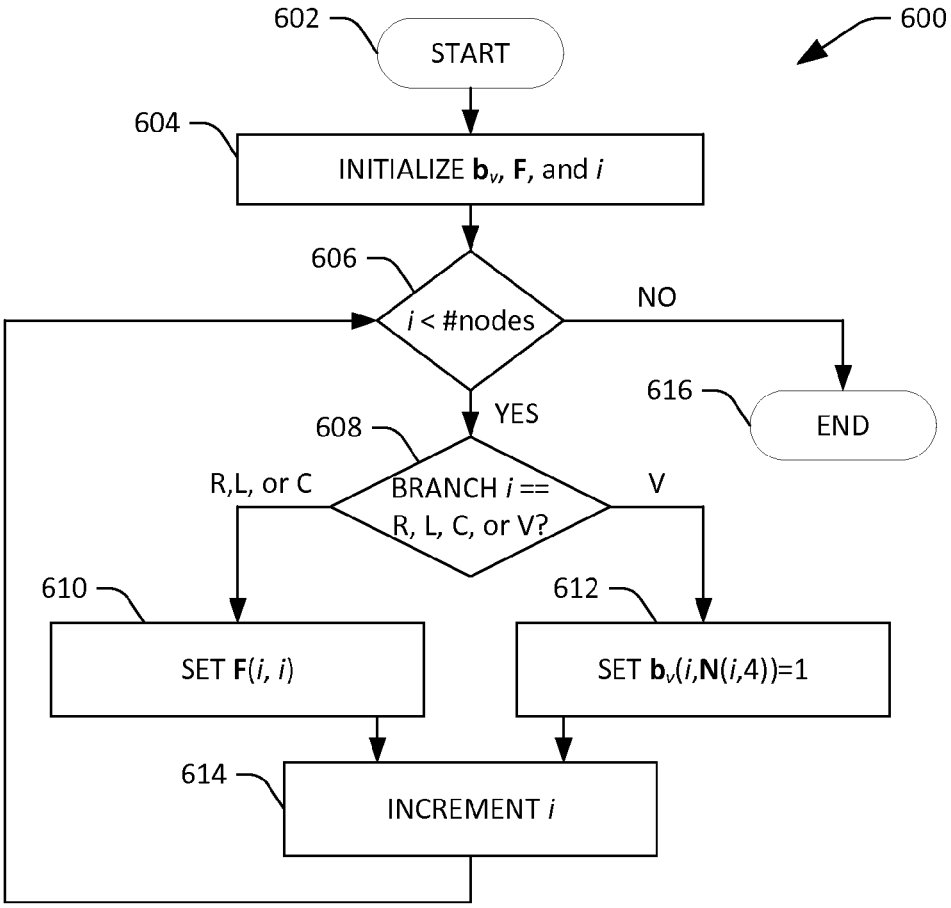
600
602
START
604
INITIALIZE $\mathbf{b}_v$, **F**, and *i*
606
i < #nodes
NO
616
END
YES
608
BRANCH *i* ==
R, L, C, or V?
R,L, or C
V
610
SET **F**(*i*, *i*)
612
SET $\mathbf{b}_v$(*i*,**N**(*i*,4))=1
614
INCREMENT *i*

FIG. 6

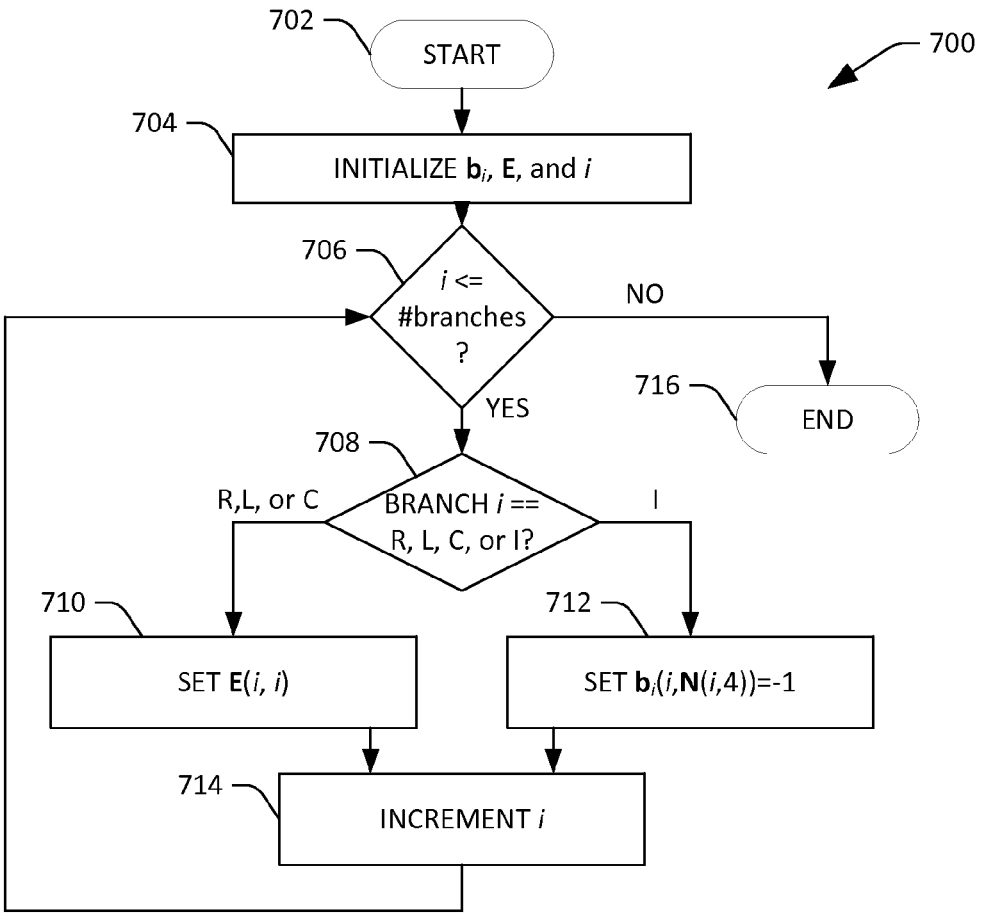
702
START
700
704
INITIALIZE $\mathbf{b}_i$, **E**, and *i*
706
i <= #branches ?
NO
716
END
YES
708
BRANCH *i* == R, L, C, or I?
R,L, or C
I
710
SET **E**(*i*, *i*)
712
SET $\mathbf{b}_i$(*i*,**N**(*i*,4))=-1
714
INCREMENT *i*

FIG. 7

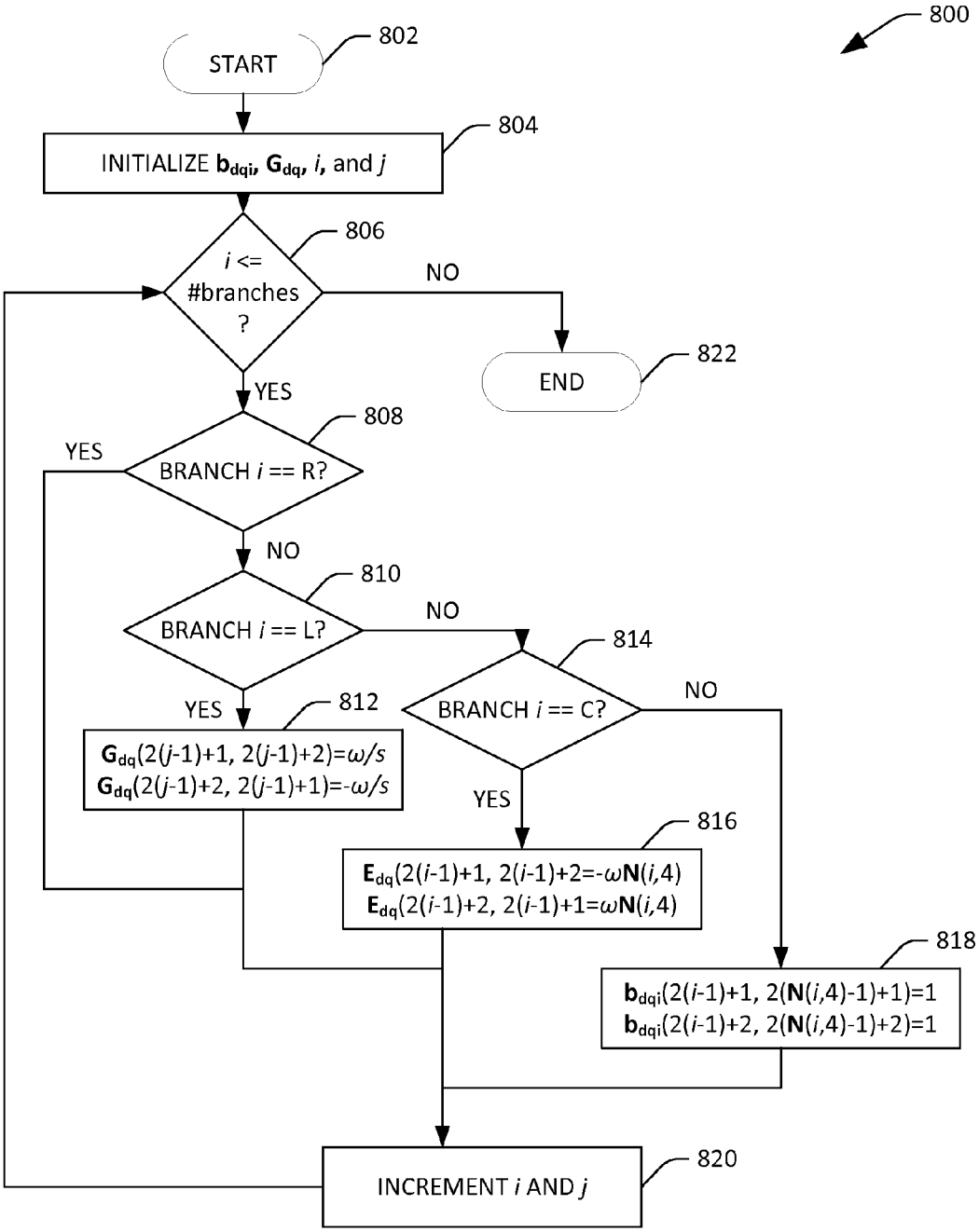
800
START
802
INITIALIZE $\mathbf{b}_{dqi}$, $\mathbf{G}_{dq}$, i, and j
804
i <= #branches ?
806
NO
END
822
YES
BRANCH i == R?
808
YES
NO
BRANCH i == L?
810
NO
BRANCH i == C?
814
NO
YES
$\mathbf{G}_{dq}(2(j-1)+1, 2(j-1)+2)=\omega/s$
$\mathbf{G}_{dq}(2(j-1)+2, 2(j-1)+1)=-\omega/s$
812
YES
$\mathbf{E}_{dq}(2(i-1)+1, 2(i-1)+2=-\omega\mathbf{N}(i,4)$
$\mathbf{E}_{dq}(2(i-1)+2, 2(i-1)+1=\omega\mathbf{N}(i,4)$
816
$\mathbf{b}_{dqi}(2(i-1)+1, 2(\mathbf{N}(i,4)-1)+1)=1$
$\mathbf{b}_{dqi}(2(i-1)+2, 2(\mathbf{N}(i,4)-1)+2)=1$
818
INCREMENT i AND j
820

FIG. 8

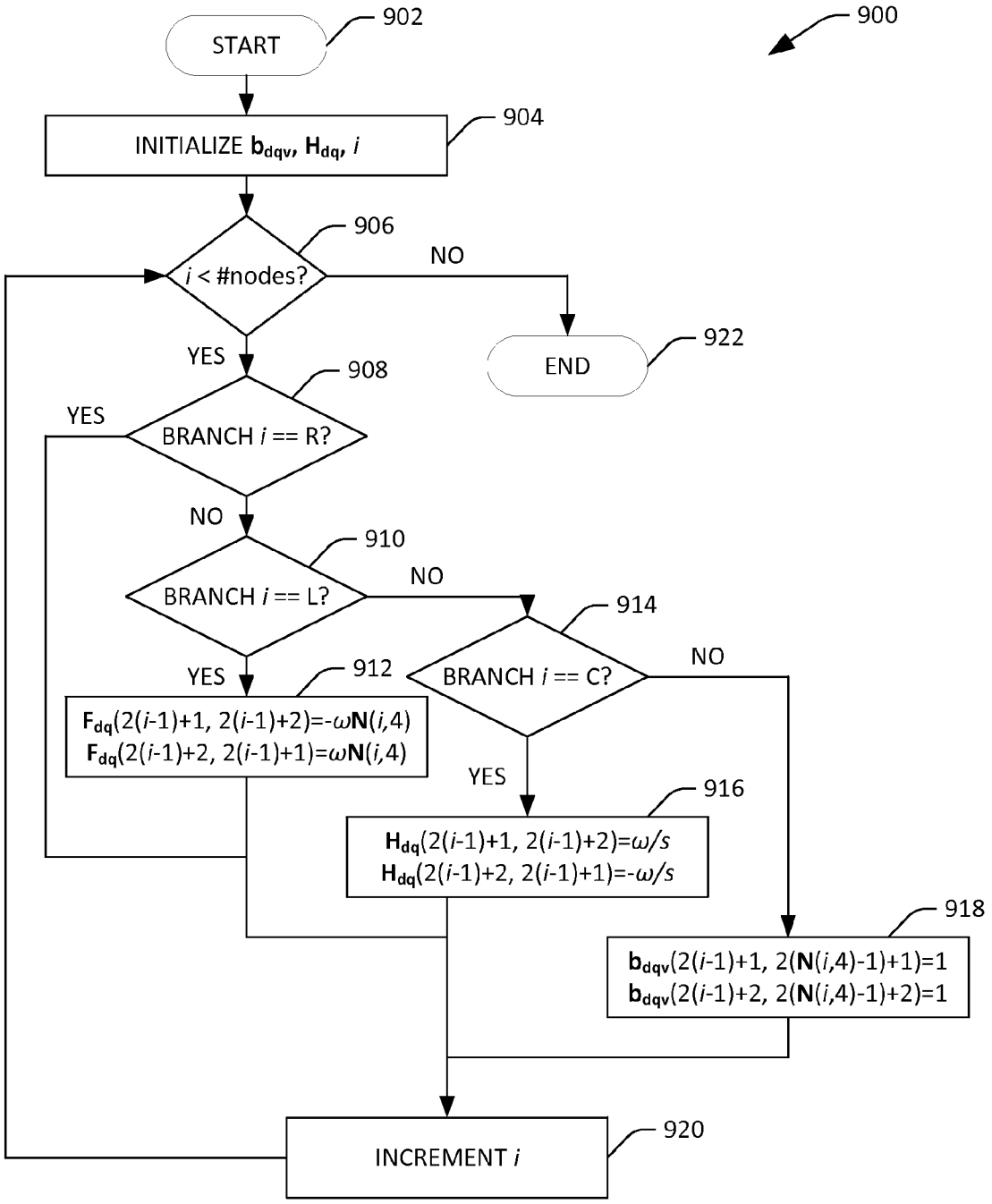
900
START
902
INITIALIZE $\mathbf{b}_{dqv}$, $\mathbf{H}_{dq}$, i
904
i < #nodes?
906
NO
END
922
YES
BRANCH i == R?
908
YES
NO
BRANCH i == L?
910
NO
BRANCH i == C?
914
NO
YES
912
$\mathbf{F}_{dq}(2(i-1)+1, 2(i-1)+2)=-\omega\mathbf{N}(i,4)$
$\mathbf{F}_{dq}(2(i-1)+2, 2(i-1)+1)=\omega\mathbf{N}(i,4)$
YES
916
$\mathbf{H}_{dq}(2(i-1)+1, 2(i-1)+2)=\omega/s$
$\mathbf{H}_{dq}(2(i-1)+2, 2(i-1)+1)=-\omega/s$
918
$\mathbf{b}_{dqv}(2(i-1)+1, 2(\mathbf{N}(i,4)-1)+1)=1$
$\mathbf{b}_{dqv}(2(i-1)+2, 2(\mathbf{N}(i,4)-1)+2)=1$
INCREMENT i
920

FIG. 9

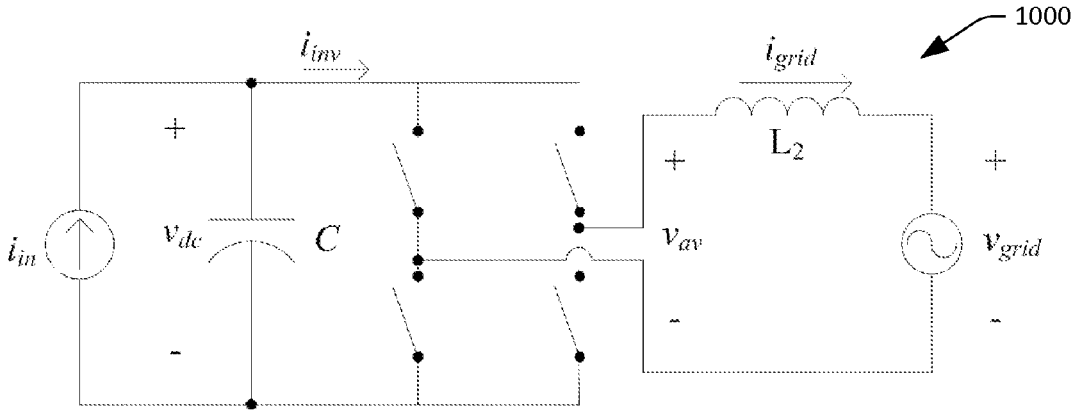
1000
i_{inv}
i_{grid}
L_2
i_{in}
v_{dc}
C
v_{av}
v_{grid}
+
-

FIG. 10

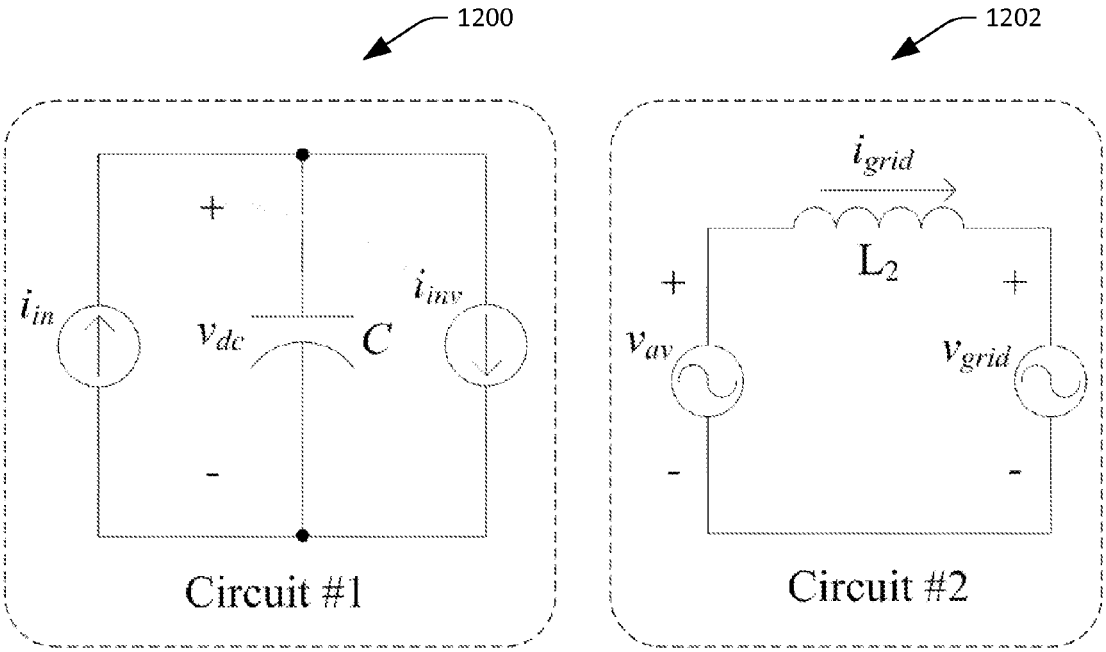
1200
1202
i_{in}
v_{dc}
C
i_{inv}
Circuit #1
i_{grid}
L_2
v_{av}
v_{grid}
Circuit #2
+
-

FIG. 12

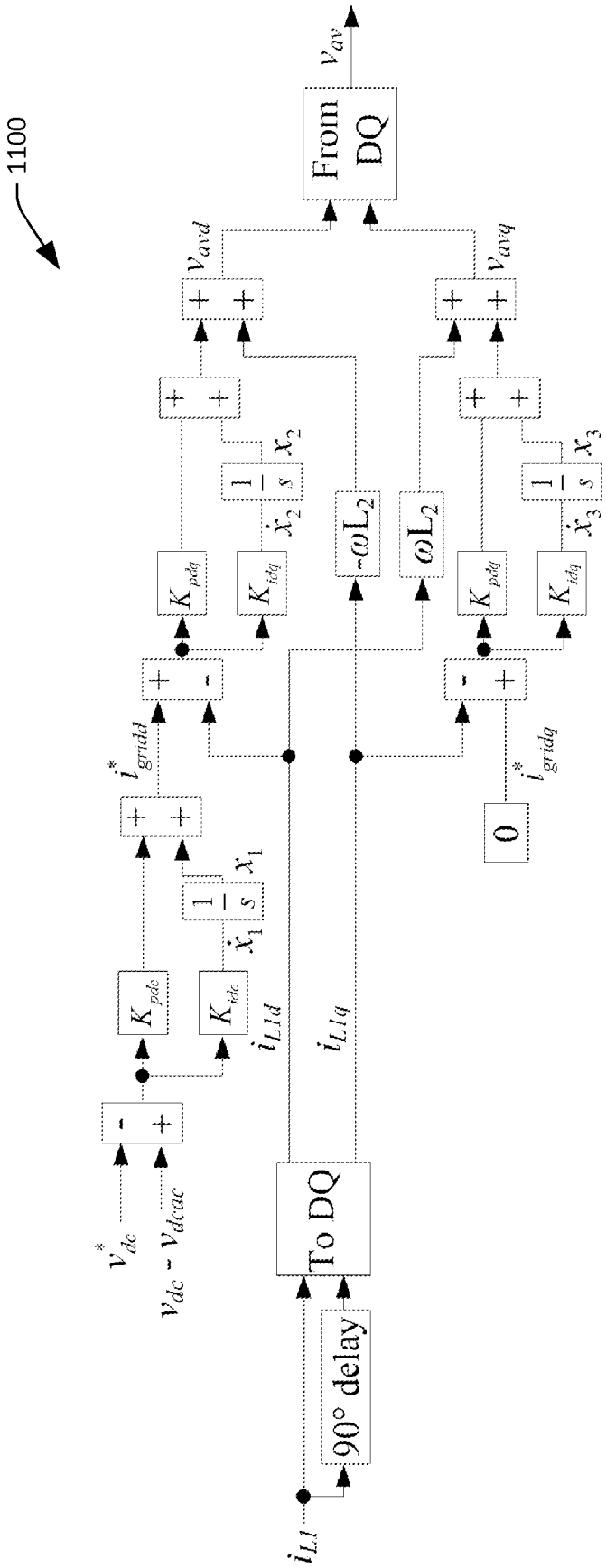
1100
From DQ
v_{av}
v_{avd}
v_{avq}
x_2
x_3
x_1
$\frac{1}{s}$
$\dot{x}_2$
$\dot{x}_3$
$\dot{x}_1$
K_{pdq}
K_{idq}
K_{pde}
K_{ide}
$-\omega L_2$
ωL_2
i^*_{gridd}
i^*_{gridq}
0
i_{L1d}
i_{L1q}
To DQ
90° delay
i_{L1}
v^*_{dc}
$v_{dc} - v_{dcac}$

FIG. 11

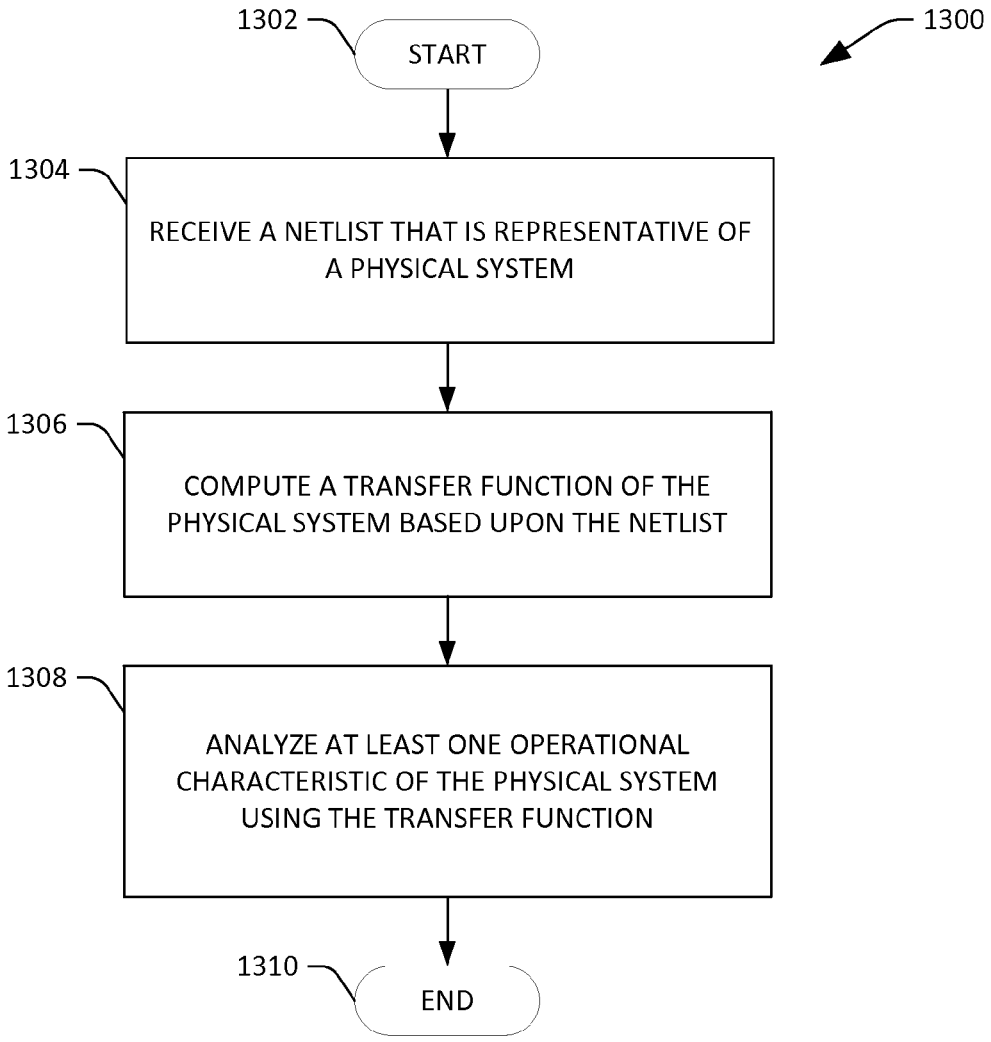
1300
1302
START
1304
RECEIVE A NETLIST THAT IS REPRESENTATIVE OF A PHYSICAL SYSTEM
1306
COMPUTE A TRANSFER FUNCTION OF THE PHYSICAL SYSTEM BASED UPON THE NETLIST
1308
ANALYZE AT LEAST ONE OPERATIONAL CHARACTERISTIC OF THE PHYSICAL SYSTEM USING THE TRANSFER FUNCTION
1310
END

FIG. 13

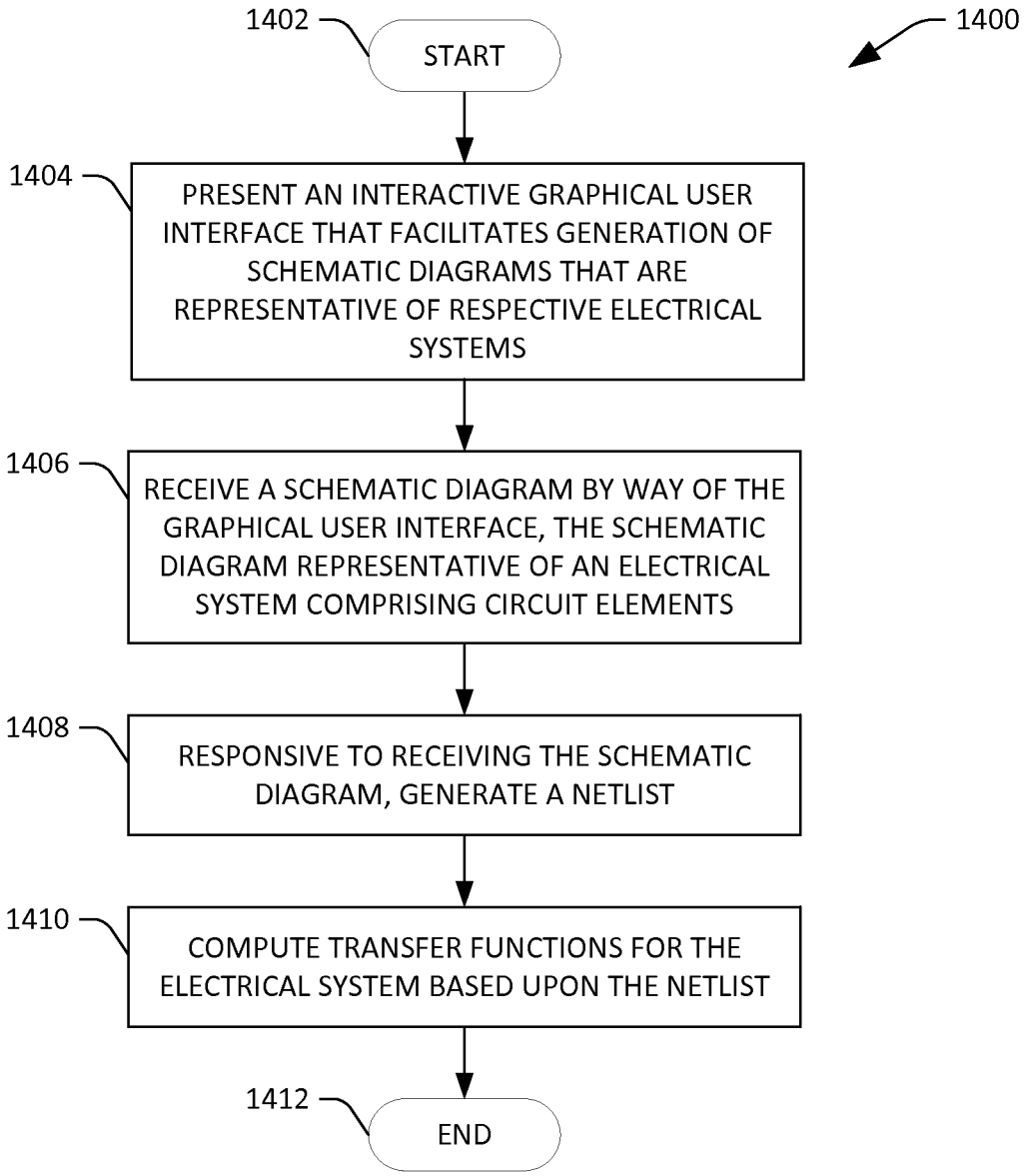
1400
1402
START
1404
PRESENT AN INTERACTIVE GRAPHICAL USER INTERFACE THAT FACILITATES GENERATION OF SCHEMATIC DIAGRAMS THAT ARE REPRESENTATIVE OF RESPECTIVE ELECTRICAL SYSTEMS
1406
RECEIVE A SCHEMATIC DIAGRAM BY WAY OF THE GRAPHICAL USER INTERFACE, THE SCHEMATIC DIAGRAM REPRESENTATIVE OF AN ELECTRICAL SYSTEM COMPRISING CIRCUIT ELEMENTS
1408
RESPONSIVE TO RECEIVING THE SCHEMATIC DIAGRAM, GENERATE A NETLIST
1410
COMPUTE TRANSFER FUNCTIONS FOR THE ELECTRICAL SYSTEM BASED UPON THE NETLIST
1412
END

FIG. 14

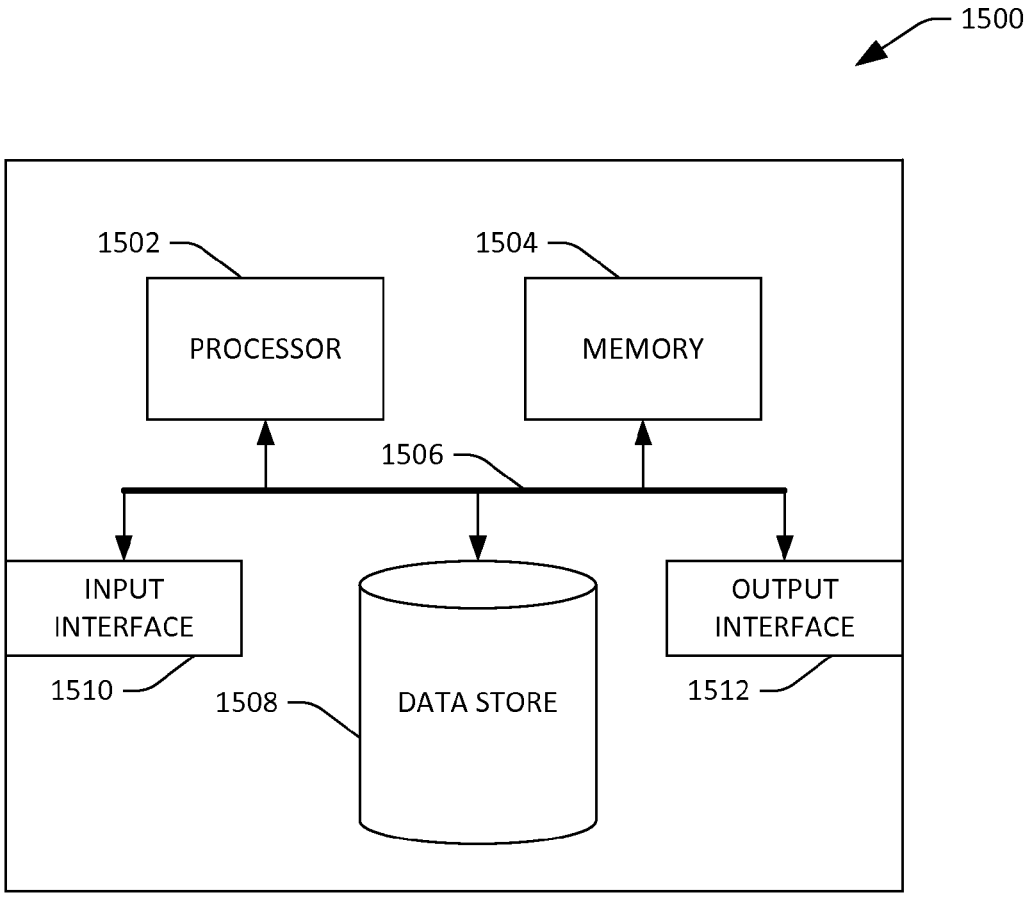
1500
1502
PROCESSOR
1504
MEMORY
1506
INPUT INTERFACE
1510
1508
DATA STORE
OUTPUT INTERFACE
1512

FIG. 15

AUTOMATIC COMPUTATION OF TRANSFER FUNCTIONS

STATEMENT OF GOVERNMENTAL INTEREST

This invention was developed under Contract DE-AC04-94AL85000 between Sandia Corporation and the U.S. Department of Energy. The U.S. Government has certain rights in this invention.

BACKGROUND

Systems that include electronic elements (e.g., resistors, capacitors, inductors, voltage sources, etc.) and mechanical elements (e.g., springs, levers, oscillating arms, etc.) can be difficult to analyze. An exemplary method for analyzing such a system includes the derivation of transfer functions of the system, wherein the transfer functions can be employed in connection with finding electronic or mechanical resonant frequencies of the system, as well as in connection with designing, optimizing, and/or validating controllers used in the system.

Deriving transfer functions of a system that includes electronic and/or mechanical elements, however, is nontrivial. An exemplary approach for deriving transfer functions of a system is to estimate an input to the system (e.g., selecting a first mathematical function that represents a controlled source of energy) and also estimating the output of the system (e.g., selecting a second mathematical function that is believed to represent the output of the system). Based upon the estimated system input and system output, the transfer functions of the system can be derived. Estimating the system input and system output, however, is often associated with inaccuracies. For instance, a conventional approach for estimating input and output of a system involves simulation of the system in the time domain, wherein the input to the system is modified during simulation and corresponding output of the system is recorded. The simulated system input and output are then subjected to transformations to generate frequency domain signals. Transfer functions (in the frequency domain) of the simulated system are then computed based upon the frequency domain signals corresponding to the simulated input and simulated output.

This conventional approach, however, suffers from various deficiencies. First, simulating operation of the system is a nontrivial task, and typically requires a user that is performing such simulating to have a relatively large amount of knowledge about the system to ensure that the system remains stable during simulation. Additionally, a relatively large amount of simulation needs to be performed to compute transfer functions accurately. The process of simulation and conversion from the time domain to the frequency domain is computationally expensive, and can take several days for relatively complex systems using conventional computing devices. Additionally, if the system is modified (e.g., if an element is added, removed, or modified), the entire process must be repeated.

SUMMARY

The following is a brief summary of subject matter that is described in greater detail herein. This summary is not intended to be limiting as to the scope of the claims.

Described herein are various technologies pertaining to the automatic derivation of transfer functions of an electrical, mechanical, electromechanical, electrochemical, or an electromagnetic system (e.g., a physical system) without requiring simulation of input and output of the system. In an exemplary embodiment, a computer-implemented tool is provided that facilitates receipt of a schematic diagram of a system whose transfer functions are desirably derived. For instance, through utilization of the computer-implemented tool, a user can draw the system. Accordingly, a library of selectable system elements (e.g., resistors, capacitors, inductors, voltage sources, current sources, amplifiers, controller blocks, springs, etc.) can be provided, and the user can draw the physical system by selecting and placing physical system elements from the library relative to one another in a desired manner. Further, the user can set forth values that describe parameters of each element in the physical system. Thus, the user can draw a physical system that includes a resistor, and the user can set forth a resistance value for the resistor.

A netlist can then be formed based upon the schematic of the physical system set forth by the user, wherein the netlist is representative of the physical system and includes data that is indicative of types of elements and respective values for the elements included in the physical system, as well as locations of elements in the physical system relative to locations of other elements in the physical system. Further, in an example, for a relatively complex physical system where an energy source is subjected to control, a plurality of netlists can be generated for the physical system, including netlists that describe subsystems in the physical system (e.g., circuits in the system) and a system-level netlist that describes control systems and interactions between the subsystems in the physical system. The computer-implemented tool can additionally receive at least one frequency value with respect to which the physical system is desirably analyzed. The computer-implemented tool can then compute transfer functions of the physical system responsive to receiving the netlist and the at least one frequency value. With more particularity, the computer-implemented tool can compute the transfer functions based upon the data that is indicative of the types of the elements, the values for the elements, and relative locations of the elements in the physical system with respect to one another as set forth in a subsystem netlist and/or system level netlist. The transfer functions computed by the computer-implemented tool can be one of an input-to-output transfer function, a control-to-output transfer function, an input impedance transfer function, or an output impedance transfer function. Further, it is to be noted that the transfer function can take into consideration operation of the control circuit in the physical system.

The computed transfer functions may then be employed in connection with analyzing the physical system in operation, designing the physical system, optimizing controls for the system, and the like. Pursuant to an example, it may be desirable to analyze perturbations experienced by an energy storage device that is coupled to an electric grid, and accordingly it may be desirable to analyze operation of circuitry that couples the energy storage device to the electric grid. Using the computer-implemented tool, transfer functions for the aforementioned circuitry can be computed for specified frequencies (as well as direct current transfer functions). A spectrum analyzer can be utilized to obtain inputs to the circuitry, and frequencies observed in the output of the spectrum analyzer can be provided as input to the transfer functions. The output of the transfer functions can be analyzed to ascertain perturbations that reach the energy storage system. Through identifying and understanding perturbations that reach the energy storage system, modifications to the circuitry and/or control system can be made to optimize the energy storage system and/or extend the life of the energy storage system.

The above summary presents a simplified summary in order to provide a basic understanding of some aspects of the systems and/or methods discussed herein. This summary is not an extensive overview of the systems and/or methods discussed herein. It is not intended to identify key/critical elements or to delineate the scope of such systems and/or methods. Its sole purpose is to present some concepts in a simplified form as a prelude to the more detailed description that is presented later.

BRIEF DESCRIPTION OF THE DRAWINGS

FIG. **1** is a functional block diagram of an exemplary computer-implemented tool that facilitates automatically deriving transfer functions of a physical system.

FIG. **2** is a functional block diagram of an exemplary computer-implemented tool that facilitates analyzing operation of a physical system based upon transfer functions derived for the physical system.

FIG. **3** is a functional block diagram of an exemplary component that facilitates derivation of transfer functions for a physical system.

FIG. **4** illustrates an exemplary branch of a physical system.

FIG. **5** illustrates an exemplary circuit for which a transfer function can be derived.

FIGS. **6-9** illustrate exemplary methodologies that can be used in connection with deriving transfer functions for a physical system.

FIG. **10** illustrates an exemplary inverter circuit.

FIG. **11** illustrates an exemplary controller for the inverter circuit shown in FIG. **10**.

FIG. **12** depicts an averaged model inverter circuit that is equivalent to the circuit shown in FIG. **10**.

FIG. **13** is a flow diagram illustrating an exemplary methodology for computing a transfer function of a physical system and analyzing at least one operational characteristics of the physical system using the derived transfer function.

FIG. **14** is a flow diagram that illustrates an exemplary methodology for computing transfer functions for an electrical system based upon an automatically generated netlist that describes contents of the system.

FIG. **15** is an exemplary computing system.

DETAILED DESCRIPTION

Various technologies pertaining to deriving transfer functions of a physical system are now described with reference to the drawings, wherein like reference numerals are used to refer to like elements throughout. In the following description, for purposes of explanation, numerous specific details are set forth in order to provide a thorough understanding of one or more aspects. It may be evident, however, that such aspect(s) may be practiced without these specific details. In other instances, well-known structures and devices are shown in block diagram form in order to facilitate describing one or more aspects. Further, it is to be understood that functionality that is described as being carried out by certain system components may be performed by multiple components. Similarly, for instance, a component may be configured to perform functionality that is described as being carried out by multiple components.

Moreover, the term "or" is intended to mean an inclusive "or" rather than an exclusive "or." That is, unless specified otherwise, or clear from the context, the phrase "X employs A or B" is intended to mean any of the natural inclusive permutations. That is, the phrase "X employs A or B" is satisfied by any of the following instances: X employs A; X employs B; or X employs both A and B. In addition, the articles "a" and "an" as used in this application and the appended claims should generally be construed to mean "one or more" unless specified otherwise or clear from the context to be directed to a singular form.

Further, as used herein, the terms "component" and "tool" are intended to encompass computer-readable data storage that is configured with computer-executable instructions that cause certain functionality to be performed when executed by a processor. The computer-executable instructions may include a routine, a function, or the like. It is also to be understood that a component or system may be localized on a single device or distributed across several devices. Additionally, as used herein, the term "exemplary" is intended to mean serving as an illustration or example of something, and is not intended to indicate a preference.

With reference now to FIG. **1**, an exemplary computer-implemented tool **100** that facilitates automatically deriving transfer functions of a physical system is illustrated. As used herein, the term "physical system" refers to an electrical system, a mechanical system, an electromechanical system, an electrochemical system, and/or an electromagnetic system.

The tool **100** optionally includes a netlist generator component **102** that receives a description of the physical system from a user and automatically generates a netlist that describes the physical system based upon the description received from the user. Pursuant to an example, a computer-implemented graphical user interface can be provided to the user that is employable by the user to generate a schematic diagram of a physical system whose transfer functions are desirably derived. For instance, the graphical user interface can provide the user with a blank canvas to place and connect "blocks" that represent respective elements of the physical system. Electrical system blocks can represent inductors, capacitors, resistors, voltage sources, current sources, etc. Mechanical system blocks can represent weights, springs, inertia, etc. Further, blocks can be representative of portions of a controller, such as gains, summations, etc. Additionally, blocks can be connected together to represent systems with coupled electrical and mechanical elements. Likewise, blocks can be representative of chemical and/or electrochemical elements, such as photovoltaic cells, piezoelectric elements, etc. For purposes of explanation, examples described herein pertain to electrical systems that include electrical elements. It is to be understood, however, that the hereto-appended claims are not to be limited to electrical systems.

As indicated above, the netlist generator component **102** can receive the schematic of the physical system set forth by the user and can automatically generate a netlist responsive to receiving such schematic. The netlist comprises data that is indicative of types of elements of the physical system and structure of the physical system (e.g., position of elements with respect to one another in the physical system). With more specificity, the netlist computed by the netlist generator component **102** can be formed as a matrix, wherein each row of the matrix includes data that is indicative of a type of a respective element, nodes to which the respective element is attached, and a value for the respective element. Furthermore, the netlist generator component **102** can arrange rows in the matrix such that certain element types are placed in the netlist at particular positions relative to other element types. For instance, with respect to an electrical system, voltage sources can be positioned in uppermost rows of the netlist, while current sources can be positioned in lowermost rows of the netlist.

The tool **100** further includes a receiver component **104** that receives the netlist. In an example, the receiver component **104** can receive the netlist from the netlist generator component **102**. In another exemplary embodiment, however, the receiver component **104** can receive the netlist directly from the user. The tool **100** also comprises a transfer function deriver component **106** that is in communication with the receiver component **104** and automatically derives transfer functions for the physical system based upon the netlist. Additionally, while not shown, the transfer function deriver component **106** can receive an indication of frequencies with respect to which transfer functions of the system are desirably derived. Therefore, if the user is interested, for instance, in ten particular harmonics of the physical system, the user can specify such ten harmonics and the transfer function deriver component **106** can generate transfer functions for the physical system with respect to the identified harmonics.

With reference now to FIG. **2**, an exemplary tool **200** that facilitates analysis of the aforementioned physical system is illustrated. The tool **200** comprises a system analyzer component **202** that receives the system transfer functions derived by the transfer function deriver component **106**. The system analyzer component **202** further receives exemplary inputs to the physical system. Such inputs can be theoretical in nature, such that operation of the physical system can be simulated. In another exemplary embodiment, for a physical system that is deployed, the user can acquire input frequency characteristics of such system (e.g., through use of a spectrum analyzer) and can provide such input frequency characteristics to the system analyzer component **202**.

The system analyzer component **202** can utilize the system transfer functions and the physical system inputs to solve for outputs of the physical system (e.g., based upon the inputs). Thus, the system analyzer component **202** can output data in the frequency domain that is indicative of output of the desirably analyzed physical system. Such output data may be indicative of resonance frequency of the physical system or other perturbations output by the physical system.

A display component **204** is in communication with the system analyzer component **202**. The display component **204** generates graphical output that is indicative of operation of the physical system when provided with the above-noted physical system inputs. For example, the graphical output can indicate whether the physical system outputs energy at a particular frequency, magnitude of energy output at such frequency, etc., for specified system inputs. Such graphical output may be in the form of text, a graph that is indicative of frequencies and/or magnitudes output by the physical system, etc.

Now turning to FIG. **3**, an exemplary depiction of the transfer function deriver component **106** is illustrated. The transfer function deriver component **106** includes a DC transfer function generator component **302**, a direct-quadrature (DQ) transfer function generator component **304**, and a system transfer function generator component **306**. As will be described in greater detail below, with respect to an electrical system, the DC transfer function generator component **302** can generate DC transfer functions for low-level circuits in the physical system, and the DQ transfer function generator component **304** can generate DQ transfer functions for the low-level circuits at specified frequencies, wherein a DQ rotating reference frame is employed. Thus, each DQ transfer function output by the DQ transfer function generator component **304** describes the input to output relationship of an alternating current component and phase of a signal at a specified frequency.

The system transfer function generator component **306** can generate high-level system transfer functions that take into consideration how control systems and circuits interact with one another. As indicated previously, the transfer function deriver component **106** can receive a high-level system netlist which can indicate whether a voltage and/or current source is a constant voltage and/or current source or a control voltage and/or current source. A type of control system use can be described in the high-level system netlist. Based upon such high-level system netlist, the system transfer function generator component **306** can generate system-level transfer functions for the physical system. Operation of the transfer function deriver component **106** will now be described in greater detail.

With reference now to FIG. **4**, an exemplary branch **400** of an electrical system is illustrated. It can be understood that a periodic signal can be represented as follows:

$$x = x_{dc} + \sum_{i=1}^{m} [x_d \cos(\omega nt) - x_q \sin(\omega nt)] \tag{1}$$

Eq. (1) is essentially a Fourier series representation of a signal. Each state can be separated into a direct current (DC) portion (x_{dc}), sum of d-axis portions ($x_d \cos(\omega nt)$), and a sum of q-axis portions ($-x_q \sin(\omega nt)$). This separation involves $2(N_{max}+1)M$ different equations, where N_{max} is a number of harmonics to be analyzed and M is a number of states in the physical system.

Generating low-level circuit transfer functions, then, is a two-step process. First, the DC transfer function generator component **302** generates DC transfer functions for the circuit. Thereafter, the DQ transfer function generator component **304** generates the DQ transfer functions for the circuit.

To generate the DC circuit transfer functions, equations in the following form can be derived:

$$x = A_{tf} x + B_{tf} u \tag{2}$$

where u represents inputs to the circuit and x represents outputs of the circuit. Solving for x yields the following:

$$x = (I - A_{tf})^{-1} B_{tf} u \tag{3}$$

The DC transfer function generator component **302** computes A_{tf} and B_{tf} from the above mentioned netlist. Eq. (2) can be further broken down as follows:

$$\begin{bmatrix} i_{y(n-1,1)} \\ i_{x(b-n+1,1)} \\ v_{x(n-1,1)} \\ v_{y(b-n+1,1)} \end{bmatrix} = \begin{bmatrix} 0_{(n-1,n-1)} & -\hat{A}_{(n-1,b-n+1)} & 0_{(n-1,n-1)} & 0_{(n-1,b-n+1)} \\ 0_{(b-n+1,n-1)} & 0_{(b-n+1,b-n+1)} & 0_{(b-n+1,n-1)} & E_{(b-n+1,b-n+1)} \\ F_{(n-1,n-1)} & 0_{(n-1,b-n+1)} & 0_{(n-1,n-1)} & 0_{(n-1,b-n+1)} \\ 0_{(b-n+1,n-1)} & 0_{(b-n+1,b-n+1)} & \hat{A}^T_{(b-n+1,n-1)} & 0_{(b-n+1,b-n+1)} \end{bmatrix} \begin{bmatrix} i_{y(n-1,1)} \\ i_{x(b-n+1,1)} \\ v_{x(n-1,1)} \\ v_{y(b-n+1,1)} \end{bmatrix} + \begin{bmatrix} 0_{(n-1,ni)} & 0_{(n-1,nv)} \\ b_{i(b-n+1,ni)} & 0_{(b-n+1,nv)} \\ 0_{(n-1,ni)} & b_{v(n-1,nv)} \\ 0_{(b-n+1,ni)} & 0_{(b-n+1,nv)} \end{bmatrix} \begin{bmatrix} u_{(ni,1)} \\ u_{(nv,1)} \end{bmatrix} \tag{4}$$

where the values in ( )'s give the dimension of each matrix, n is the number of nodes, b is the number of branches, nv is the number of voltage sources, and ni is the number of current sources.

The DC transfer function generator component **302** can generate $\hat{A}$ based upon the netlist describing the circuit. Each row of the netlist represents a branch of the circuit, such as the branch **400** illustrated in FIG. **4**. For purposes of explanation, at the circuit level, each branch can represent a single element, such as, a resistor, an inductor, a capacitor, a voltage source, or a current source. Accordingly, each row of the netlist includes 1) a type of the branch **400** (R, L, C, V or I), 2) the node to which the positive terminal of the branch **400** is connected (e.g., node n_2), the node to which the negative terminal of the branch **400** is connected (e.g., node n_1), a value for the branch **400**, and a name of the branch **400**.

FIG. **5** illustrates an exemplary circuit **500** which includes nodes **502**, **504** and **506**, and branches **508**, **510**, **512**, and **514**. The nodes **502**, **504**, and **506** are referred to as nodes 1, 2, and 3, while the branches **508**, **510**, **512**, and **514** are referred to branches 1, 2, 3, and 4. An exemplary netlist N for the circuit **500** is set forth below.

$$N = \begin{array}{c} \begin{array}{ccccc} type & n_1 & n_2 & value & name \end{array} \\ \left[\begin{array}{ccccc} V & 1 & 3 & 1 & \text{"}Vin\text{"} \\ L & 1 & 2 & 1e-3 & \text{"}L1\text{"} \\ R & 2 & 3 & 10 & \text{"}R1\text{"} \\ 1 & 3 & 2 & 2 & \text{"}Iin\text{"} \end{array}\right] \begin{array}{c} 1 \\ 2 \\ 3 \\ 4 \end{array} \downarrow \text{Branch \#} \end{array}$$

Values for the voltage sources and current sources in the netlist are used to specify the order that the inputs appear in the transfer functions matrix of Eq. (3). Prior to processing the netlist, voltage sources can be placed at the top of the netlist and current sources can be placed at the bottom of the netlist. Arrangement of rows of the netlist can be performed by the netlist generator component **102** based upon a schematic of the circuit **500** set forth by the user. Alternatively, the user can arrange contents of the netlist in accordance with pre-specified rules, wherein voltage sources are located at the top and current sources at the bottom of the netlist.

Referring to the exemplary netlist N above, the DC transfer function generator component **302** can generate the node incident matrix A_a, wherein each column in A_a corresponds with a branch in N. Further, each row in A_a corresponds with a node in N. If the positive (negative) terminal of the ith branch of N is on node j, then $A_{a(i,j)}=1$ ($A_{a(i,j)}=-1$). The DC transfer function generator component **302** can set all other entries in A_a to 0. Based upon the exemplary netlist N set forth above, the DC transfer function generator component **302** can generate A_a to be the following:

$$A_a = \begin{array}{c} \overbrace{\begin{array}{cccc} 1 & 2 & 3 & 4 \end{array}}^{\text{branch \#}} \\ \left[\begin{array}{cccc} 1 & 1 & 0 & 0 \\ 0 & -1 & 1 & -1 \\ -1 & 0 & -1 & 1 \end{array}\right] \begin{array}{c} 1 \\ 2 \\ 3 \end{array} \downarrow \text{node \#} \end{array}$$

Placing A_a in reduced row echelon form yields $\tilde{A}_a$, which has a form as follows:

$$\tilde{A}_a = \begin{bmatrix} I_{n-1,n-1} & \hat{A}_{n-1,b-n+1} \\ 0_{1,n-1} & 0_{1,b-n+1} \end{bmatrix} = \left[\begin{array}{cc|cc} 1 & 0 & 1 & -1 \\ 0 & 1 & -1 & 1 \\ \hline 0 & 0 & 0 & 0 \end{array}\right] \quad (5)$$

Columns in Eq. (5) can be swapped to obtain the correct form if desired. If this occurs, corresponding branches (rows) in N can be swapped. The $\tilde{A}_a$ matrix in Eq. (5) gives the $\hat{A}$ and $\hat{A}^T$ components of A_{tf}.

$\hat{A}$ gives n−1 linearly independent Kirchhoff's current law (KCL) equations. Specifically, i_y represents currents corresponding to the first n−1 branches in N, and i_x represents the currents corresponding to the last b−n+1 branches in N. Given the foregoing and contents of Eq. (5), the following can be derived by the DC transfer function generator component **302**:

$$i_y = -\hat{A} i_x, \quad (6)$$

which relates the dependent currents (i_y) to the independent currents (i_x). The DC transfer function generator component **302** can take the transpose of $\hat{A}$, and generate a set of b−n+1 linearly independent Kirchhoff's voltage law (KVL) in the form of:

$$v_y = \hat{A}^T v_x \quad (7)$$

which relates the dependent voltages (v_y) to the independent voltages (v_x). Using Eq. (6) and Eq. (7), b linearly independent equations are obtained. It can be understood that there must be 2b linearly independent equations, since the current and voltage are to be derived for each branch. The remaining b equations can be derived by the DC transfer function generator component **302** using branch constitutive equations, which are defined in E, F, b_i, and b_v from Eq. (4). Equations for the independent variables (i_x and v_x) can be derived programmatically by the DC transfer function generator component **302**.

FIGS. **6-9** and **13-14** illustrate exemplary methodologies relating to computing transfer functions of a physical system. While the methodologies are shown and described as being a series of acts that are performed in a sequence, it is to be understood and appreciated that the methodologies are not limited by the order of the sequence. For example, some acts can occur in a different order than what is described herein. In addition, an act can occur concurrently with another act. Further, in some instances, not all acts may be required to implement a methodology described herein.

Moreover, the acts described herein may be computer-executable instructions that can be implemented by one or more processors and/or stored on a computer-readable medium or media. The computer-executable instructions can include a routine, a sub-routine, programs, a thread of execution, and/or the like. Still further, results of acts of the methodologies can be stored in a computer-readable medium, displayed on a display device, and/or the like.

Referring now to FIG. **6**, an exemplary methodology **600** for defining F and b_v that can be performed by the DC transfer function generator component **302** is illustrated. The methodology **600** maps the dependent currents i_y to the independent voltages v_x. The methodology **600** starts at **602**, and at **604** F, b_v, and i are initialized. In an exemplary embodiment, F and b_v can be set to zero when initialized, and i can be set to one when initialized. At **606**, a determination is made regarding whether i is less than the number of nodes in N. If i is less than the number of nodes in N, then the methodology **600** proceeds to **608**, where a determination is made regarding whether branch i of N represents a resistor, inductor, capacitor, or voltage source. If it is determined that branch i represents a resistor, inductor, or capacitor, then the methodology **600** proceeds to **610**, where F(i, i) is set. With more particularity, if the branch i represents a resistor, the ith diagonal entry of F is set to the resistive value of the branch. If the branch i represents an inductor, the ith diagonal entry of F is

set to the impedance of the branch (sL). If the branch i represents a capacitor, the ith diagonal entry of F is set to the impedance of the branch (1/sC).

If at **608**, it is determined that the branch i of N represents a voltage source, then the methodology **600** proceeds to **612**, where $b_v(i,N(i,4))=1$. In other words, the ith row and the column corresponding to the voltage source of b_v is set to 1. Subsequent to acts **610** or **612**, at **614**, i is incremented, and the methodology **600** returns to act **606**. When it is determined at **606** that i is not less than the number of nodes in N, the methodology **600** completes at **616**. Thus, if the netlist N follows the convention of ordering voltage source branches first and current source branches last, then there will be no current sources in the first n−1 branches.

Turning now to FIG. **7**, an exemplary methodology **700** that can be performed by the DC transfer function generator component **302** in connection with defining E and b_i is illustrated. Equations E and b_i map the dependent voltages v_y to the independent currents i_x. The methodology **700** starts at **702**, and at **704** E, b_i, and i are initialized. Pursuant to an example, E and b_i can be set to zero when initialized, while i can be set to one. The last b−n+1 branches (rows) of the netlist N are parsed through by the methodology **700**. At **706**, a determination is made as to whether i is less than or equal to the number of branches in N. If it is determined at **706** that i is less than or equal to the number of branches in N, then the methodology **700** proceeds to **708**, where a determination is made as to whether branch i in N represents a resistor, inductor, capacitor, or current source. If it is determined at **708** that branch i represents a resistor, inductor, or capacitor, then the methodology **700** proceeds to act **710**, where a value for E(i, i) is set. With more particularity, if branch i of N represents a resistor, then the ith diagonal entry of E is set to the inverse of the resistive value of branch i. If the branch i of N represents an inductor, the ith diagonal entry of E is set to the admittance of branch i (1/sL). If the branch i of N represents a capacitor, the ith diagonal entry of E is set to the admittance of branch i (sC).

If it is determined at **708** that branch i corresponds to a current source, then the methodology **700** proceeds to **712**, where b_i is set by way of $b_i(i,N(i,4))=-1$. In other words, the ith row and the column corresponding to the current source of b_i can be set to −1. Subsequent to act **710** or act **712**, the methodology **700** proceeds to **714**, where i is incremented. Thereafter, the methodology **700** returns to act **706**. When i is found to be equal to the number of branches in N, the methodology completes at **716**. If N follows the convention of ordering all voltage source branches first and all current source branches last, then an error case will not be encountered.

It can be ascertained that variables in Eq. (4) can be defined based upon the methodologies **600** and **700**. The DC transfer function generator component **302** can then solve for DC transfer functions using Eq. (3), wherein such transfer functions can be in the following form:

$$\frac{x}{u}=\begin{bmatrix} \frac{i_1}{i_{in(1)}} & \frac{i_1}{i_{in(2)}} & \cdots & \frac{i_1}{i_{in(ni)}} & \frac{i_1}{v_{in(1)}} & \frac{i_1}{v_{in(2)}} & \cdots & \frac{i_1}{v_{in(nv)}} \\ \frac{i_2}{i_{in(1)}} & \frac{i_2}{i_{in(2)}} & & \frac{i_2}{i_{in(ni)}} & \frac{i_2}{v_{in(1)}} & \frac{i_2}{v_{in(2)}} & & \frac{i_2}{v_{in(nv)}} \\ \vdots & & \ddots & & \vdots & & \ddots & \vdots \\ \frac{i_b}{i_{in(1)}} & \frac{i_b}{i_{in(2)}} & & \frac{i_b}{i_{in(ni)}} & \frac{i_b}{v_{in(1)}} & \frac{i_b}{v_{in(2)}} & & \frac{i_b}{v_{in(nv)}} \\ \frac{v_1}{i_{in(1)}} & \frac{v_1}{i_{in(2)}} & \cdots & \frac{v_1}{i_{in(ni)}} & \frac{v_1}{v_{in(1)}} & \frac{v_1}{v_{in(2)}} & \cdots & \frac{v_1}{v_{in(nv)}} \\ \frac{v_2}{i_{in(1)}} & \frac{v_2}{i_{in(2)}} & & \frac{v_2}{i_{in(ni)}} & \frac{v_2}{v_{in(1)}} & \frac{v_2}{v_{in(2)}} & & \frac{v_2}{v_{in(nv)}} \\ \cdots & & \ddots & & \vdots & & \ddots & \vdots \\ \frac{v_b}{i_{in(1)}} & \frac{v_b}{i_{in(2)}} & \cdots & \frac{v_b}{i_{in(ni)}} & \frac{v_b}{v_{in(1)}} & \frac{v_b}{v_{in(2)}} & \cdots & \frac{v_2}{v_{in(nv)}} \end{bmatrix} \tag{8}$$

The numerator in each entry represents either the current through a branch or the voltage across the branch. The branch number can be specified by a subscript of the numerator (with b representing the number of branches in the circuit). The denominator in each entry can represent an input current or voltage. The input source number can be specified by the subscript and parentheses (with ni representing the number of current sources in the circuit and nv representing the number of voltage sources in the circuit).

As mentioned above, the DQ transfer function generator component **304** can derive transfer functions at the circuit level by using multiple reference frame theory, thereby allowing for a linear periodically time varying system to be accurately analyzed as a linear time invariant system. With more specificity, the DQ transfer function generator component **304** can generate circuit level transfer functions using the DQ rotating reference frame. Equations in DQ are used to model the AC component of each signal, and each DQ equation describes the input to output relationship of a signal at a specific frequency. For each frequency to be analyzed (e.g., as specified by a user), the DQ transfer function generator component **304** can generate a new equation in the form of Eq. (2). In generating DQ equations, the DQ transfer function generator component **304** can represent Eq. (2) as set forth below:

$$\begin{bmatrix} i_{dqy(2(n-1),1)} \\ i_{dqx(2(b-n+1),1)} \\ v_{dqx(2(n-1),1)} \\ v_{dqy(2(b-n+1),1)} \end{bmatrix} = \begin{bmatrix} 0_{(2(n-1),2(n-1))} & -\hat{A}_{dq(2(n-1),2(b-n+1))} & 0_{(2(n-1),2(n-1))} & 0_{(2(n-1),2(b-n+1))} \\ 0_{(2(b-n+1),2(n-1))} & G_{dq(2(b-n+1),2(b-n+1))} & 0_{(2(b-n+1),2(n-1))} & E_{dq(2(b-n+1),2(b-n+1))} \\ F_{dq(2(n-1),2(n-1))} & 0_{(2(n-1),2(b-n+1))} & H_{dq(2(n-1),2(n-1))} & 0_{(2(n-1),2(b-n+1))} \\ 0_{(2(b-n+1),2(n-1))} & 0_{(2(b-n+1),2(b-n+1))} & \hat{A}^T_{dq(2(b-n+1),2(n-1))} & 0_{(2(b-n+1),2(b-n+1))} \end{bmatrix} \begin{bmatrix} i_{dqy(2(n-1),1)} \\ i_{dqx(2(b-n+1),1)} \\ v_{dqx(2n-1),1)} \\ v_{dqy(2(b-n+1),1)} \end{bmatrix} + \begin{bmatrix} 0_{(2(n-1),2ni)} & 0_{(2(n-1),2nv)} \\ b_{dqi(2(b-n+1),2ni)} & 0_{(2(b-n+1),2nv)} \\ 0_{(2(n-1),2ni)} & b_{dqv(2(n-1),2nv)} \\ 0_{(2(b-n+1),2ni)} & 0_{(2(b-n+1),2nv)} \end{bmatrix} \begin{bmatrix} u_{dq(2ni,1)} \\ u_{dq(2nv,1)} \end{bmatrix} \tag{9}$$

Eq. (9) is similar to Eq. (4), with the difference lying in the size of the DQ equations. Specifically, a relationship between the number of equations and the number of states can be set forth as follows (as indicated above with respect to Eq. (1)): $2(N_{max}+1)M$. This is due to each DQ equation being represented by both the amplitude of a cosine signal (d-axis) and a specific frequency and the amplitude of a negative sine signal (q-axis) at the specific frequency.

To generate DQ equations, the DQ transfer function generator component **304** can define each sub-matrix from Eq. (9). The DQ transfer function generator component **304** can generate $\hat{A}_{dq}$, E_{dq}, and F_{dq}, using equations $\hat{A}$, E, and F, respectively, from Eq. (4). Specifically, multiplying each individual entry in $\hat{A}$, E, and F by a 2×2 identity matrix can generate $\hat{A}_{dq}$, E_{dq}, and F_{dq}.

It can also be ascertained that Eq. (9) adds the G_{dq} and H_{dq} matrices. Such matrices represent a cross-coupling between the d-axis and q-axis equations, which occurs at energy storage elements in the circuits (this cross-coupling is why many DQ-controlled inverters have a $\pm\omega L$ decoupling term, just before generating the commanded output voltage). Cross coupling terms can also be added to the existing E_{dq} and F_{dq} matrices. G_{dq} includes exclusively cross-coupling terms for the independent branch currents. H_{dq} includes exclusively cross-coupling terms for the independent branch voltages. Addition of the cross-coupling terms to Eq. (9) are illustrated in FIGS. **8** and **9**, respectively.

Referring solely to FIG. **8**, an exemplary methodology **800** that can be performed by the DQ transfer function generator component **304** in connection with defining G_{dq}, E_{dq}, and b_{dqi}; is illustrated. The methodology **800** starts at **802**, and at **804** b_{dqi}, G_{dq}, i, and i are initialized. For instance, b_{dqi} and G_{dq} can be set to zero, i can be set to the number of nodes in N, and j can be set to one.

At **806**, a determination is made as to whether i is less than or equal to the number of branches in N. If i is less than or equal to the number of branches in N, then the methodology **800** proceeds to **808**, where a determination is made as to whether branch i in N represents a resistor. If it is determined that branch i in N does not represent a resistor, than the methodology **800** proceeds to **810**, where a determination is made as to whether branch i in N represents an inductor. If it is determined that branch i represents an inductor, the methodology **800** proceeds to **812**, where $G_{dq}(2(j-1)+1, 2(j-1)+2)=\omega/s$, $G_{dq}(2(j-1)+2, 2(j-1)+1)=-\omega/s$ and where ω is a frequency set forth by the user. For example, if the user desires to analyze the physical system at DC, 60 Hz, 120 Hz, and 180 Hz, there will be one equation in the form of Eq. (4) and three equations in the form of Eq. (9). One of such equations will have $\omega=2\pi 60$, one will have $\omega=2\pi 120$, and one will have $\omega=2\pi 180$. Since circuits for which transfer functions are to be generated by the DC transfer function generator component **302** and the DQ transfer function generator component **304** are linear, there is no transfer between the DC, 60 Hz, 120 Hz, and 180 Hz circuits. Transfer properties can be considered when processing the system level netlist.

If at **810** it is determined that branch i of N does not represent an inductor, than the methodology **800** proceeds to **814**, where a determination is made regarding whether branch i of N represents a capacitor. If it is determined that the branch i of N represents a capacitor, the methodology **800** proceeds to **816**, where $E_{dq}(2(i-1)+1, 2(i-1)+2=-\omega N(i,4)$, and $E_{dq}(2(i-1)+2, 2(i-1)+1=\omega N(i,4)$.

If it is determined at **816** that branch i of N does not represent a capacitor (thus, branch i represents a voltage source), then the methodology **800** proceeds to **818**, where $b_{dqi}(2(i-1)+1, 2(N(i,4)-1)+1)=1$, and $b_{dqi}(2(i-1)+2, 2(N(i,4)-1)+2)=1$. If at **808** it is determined that the branch i of the netlist represents a resistor, or subsequent to acts **812**, **816** or **818**, the methodology **800** proceeds to **820**, where i and j are incremented. Thereafter, the methodology **800** returns to act **806**. If it is determined at act **806** that the value for i is not less than or equal to the number of branches in N, then the methodology **800** completes at **822**.

Now referring to FIG. **9**, an exemplary methodology **900** that can be executed by the DQ transfer function generator component **304** in connection with setting values for H_{dq}, b_{dqv}, and F_{dq} is illustrated. The methodology **900** starts at **902**, and at **904**, H_{dq}, b_{dqv}, and i are initialized. For instance, H_{dq} and b_{dqv} can be set to zero when initialized, while i can be set to one. At **906**, a determination is made regarding whether i is less than the number of nodes represented in N. If it is found that i is less than the number of nodes in N, then the methodology **900** proceeds to **908**, where a determination is made as to whether branch i in N represents a resistor. If it is found at **908** that branch does not represents a resistor, than the methodology **900** proceeds to **910**, where a determination is made regarding whether the branch i of N represents an inductor. If it is determined that the branch i represents an inductor, than the methodology **900** proceeds to **912**, where $F_{dq}(2(i-1)+1, 2(i-1)+2)=-\omega N(i,4)$, and $F_{dq}(2(i-1)+2, 2(i-1)+1)=\omega N(i,4)$. If at **910** it is determined that branch i of N does not represent an inductor, then the methodology **900** proceeds to **914**, where a determination is made regarding whether branch i of N represents a capacitor. If it is found that branch i of N represents a capacitor, then the methodology **900** proceeds to **916**, where $H_{dq}(2(i-1)+1, 2(i-1)+2)=\omega/s$ and $H_{dq}(2(i-1)+2, 2(i-1)+1)=-\omega/s$. If it is found at **914** that branch i of N does not represent a capacitor (e.g., branch i of N represents a voltage source), then the methodology **900** proceeds to **918**, where $b_{dqv}(2(i-1)+1, 2(N(i,4)-1)+1)=1$ and $b_{dqv}(2(i-1)+2, 2(N(i,4)-1)+2)=1$.

If at **908** it is determined that branch i of N represents a resistor, or subsequent to acts **912**, **916**, or **918**, the methodology **900** proceeds to **920**, where i is incremented. Thereafter, the methodology **900** returns to **906**. If it is determined at **906** that i is not less than the number of nodes in the netlist, then the methodology **900** completes at **922**.

Subsequent to computing the cross-coupling terms, the DQ transfer function generator component **304** can place such cross-coupling terms in Eq. (9), and can solve for the DQ transfer functions of the circuit. Such transfer functions can have a form as follows:

$$\frac{x}{u} = \begin{bmatrix} \frac{i_{1d}}{i_{ind(1)}} & \frac{i_{1d}}{i_{inq(1)}} & \frac{i_{1d}}{i_{ind(2)}} & \frac{i_{1d}}{i_{inq(2)}} & & \frac{i_{1d}}{i_{ind(ni)}} & \frac{i_{1d}}{i_{inq(ni)}} & \frac{i_{1d}}{v_{ind(1)}} & \frac{i_{1d}}{v_{inq(1)}} & \frac{i_{1d}}{v_{ind(2)}} & \frac{i_{1d}}{v_{inq(2)}} & & \frac{i_{1d}}{v_{ind(nv)}} & \frac{i_{1d}}{v_{ind(nv)}} \\ \frac{i_{1q}}{i_{ind(1)}} & \frac{i_{1q}}{i_{inq(1)}} & \frac{i_{1q}}{i_{ind(2)}} & \frac{i_{1q}}{i_{inq(2)}} & \cdots & \frac{i_{1q}}{i_{ind(ni)}} & \frac{i_{1q}}{i_{inq(ni)}} & \frac{i_{1q}}{v_{ind(1)}} & \frac{i_{1q}}{v_{inq(1)}} & \frac{i_{1q}}{v_{ind(2)}} & \frac{i_{1q}}{v_{inq(2)}} & \cdots & \frac{i_{1q}}{v_{ind(nv)}} & \frac{i_{1q}}{v_{ind(nv)}} \\ \frac{i_{2d}}{i_{ind(1)}} & \frac{i_{2d}}{i_{inq(1)}} & \frac{i_{2d}}{i_{ind(2)}} & \frac{i_{2d}}{i_{inq(2)}} & & \frac{i_{2d}}{i_{ind(ni)}} & \frac{i_{2d}}{i_{inq(ni)}} & \frac{i_{2d}}{v_{ind(1)}} & \frac{i_{2d}}{v_{inq(1)}} & \frac{i_{2d}}{v_{ind(2)}} & \frac{i_{2d}}{v_{inq(2)}} & & \frac{i_{2d}}{v_{ind(nv)}} & \frac{i_{2d}}{v_{ind(nv)}} \\ \frac{i_{2q}}{i_{ind(1)}} & \frac{i_{2q}}{i_{inq(1)}} & \frac{i_{2q}}{i_{ind(2)}} & \frac{i_{2q}}{i_{inq(2)}} & & \frac{i_{2q}}{i_{ind(ni)}} & \frac{i_{2q}}{i_{inq(ni)}} & \frac{i_{2q}}{v_{ind(1)}} & \frac{i_{2q}}{v_{inq(1)}} & \frac{i_{2q}}{v_{ind(2)}} & \frac{i_{2q}}{v_{inq(2)}} & & \frac{i_{2q}}{v_{ind(nv)}} & \frac{i_{2q}}{v_{ind(nv)}} \\ & \vdots & & & \ddots & & \vdots & & & & & \ddots & & \vdots \\ \frac{i_{bd}}{i_{ind(1)}} & \frac{i_{bd}}{i_{inq(1)}} & \frac{i_{bd}}{i_{ind(2)}} & \frac{i_{bd}}{i_{inq(2)}} & & \frac{i_{bd}}{i_{ind(ni)}} & \frac{i_{bd}}{i_{inq(ni)}} & \frac{i_{bd}}{v_{ind(1)}} & \frac{i_{bd}}{v_{inq(1)}} & \frac{i_{bd}}{v_{ind(2)}} & \frac{i_{bd}}{v_{inq(2)}} & & \frac{i_{bd}}{v_{ind(nv)}} & \frac{i_{bd}}{v_{ind(nv)}} \\ \frac{i_{bq}}{i_{ind(1)}} & \frac{i_{bq}}{i_{inq(1)}} & \frac{i_{bq}}{i_{ind(2)}} & \frac{i_{bq}}{i_{inq(2)}} & & \frac{i_{bq}}{i_{ind(ni)}} & \frac{i_{bq}}{i_{inq(ni)}} & \frac{i_{bq}}{v_{ind(1)}} & \frac{i_{bq}}{v_{inq(1)}} & \frac{i_{bq}}{v_{ind(2)}} & \frac{i_{bq}}{v_{inq(2)}} & & \frac{i_{bq}}{v_{ind(nv)}} & \frac{i_{bq}}{v_{ind(nv)}} \\ \frac{v_{1d}}{i_{ind(1)}} & \frac{v_{1d}}{i_{inq(1)}} & \frac{v_{1d}}{i_{ind(2)}} & \frac{v_{1d}}{i_{inq(2)}} & & \frac{v_{1d}}{i_{ind(ni)}} & \frac{v_{1d}}{i_{inq(ni)}} & \frac{v_{1d}}{v_{ind(1)}} & \frac{v_{1d}}{v_{inq(1)}} & \frac{v_{1d}}{v_{ind(2)}} & \frac{v_{1d}}{v_{inq(2)}} & & \frac{v_{1d}}{v_{ind(nv)}} & \frac{v_{1d}}{v_{ind(nv)}} \\ \frac{v_{1q}}{i_{ind(1)}} & \frac{v_{1q}}{i_{inq(1)}} & \frac{v_{1q}}{i_{ind(2)}} & \frac{v_{1q}}{i_{inq(2)}} & \cdots & \frac{v_{1q}}{i_{ind(ni)}} & \frac{v_{1q}}{i_{inq(ni)}} & \frac{v_{1q}}{v_{ind(1)}} & \frac{v_{1q}}{v_{inq(1)}} & \frac{v_{1q}}{v_{ind(2)}} & \frac{v_{1q}}{v_{inq(2)}} & \cdots & \frac{v_{1q}}{v_{ind(nv)}} & \frac{v_{1q}}{v_{ind(nv)}} \\ \frac{v_{2d}}{i_{ind(1)}} & \frac{v_{2d}}{i_{inq(1)}} & \frac{v_{2d}}{i_{ind(2)}} & \frac{v_{2d}}{i_{inq(2)}} & & \frac{v_{2d}}{i_{ind(ni)}} & \frac{v_{2d}}{i_{inq(ni)}} & \frac{v_{2d}}{v_{ind(1)}} & \frac{v_{2d}}{v_{inq(1)}} & \frac{v_{2d}}{v_{ind(2)}} & \frac{v_{2d}}{v_{inq(2)}} & & \frac{v_{2d}}{v_{ind(nv)}} & \frac{v_{2d}}{v_{ind(nv)}} \\ \frac{v_{2q}}{i_{ind(1)}} & \frac{v_{2q}}{i_{inq(1)}} & \frac{v_{2q}}{i_{ind(2)}} & \frac{v_{2q}}{i_{inq(2)}} & & \frac{v_{2q}}{i_{ind(ni)}} & \frac{v_{2q}}{i_{inq(ni)}} & \frac{v_{2q}}{v_{ind(1)}} & \frac{v_{2q}}{v_{inq(1)}} & \frac{v_{2q}}{v_{ind(2)}} & \frac{v_{2q}}{v_{inq(2)}} & & \frac{v_{2q}}{v_{ind(nv)}} & \frac{v_{2q}}{v_{ind(nv)}} \\ & \vdots & & & \ddots & & \vdots & & & & & \ddots & & \vdots \\ \frac{v_{bd}}{i_{ind(1)}} & \frac{v_{bd}}{i_{inq(1)}} & \frac{v_{bd}}{i_{ind(2)}} & \frac{v_{bd}}{i_{inq(2)}} & & \frac{v_{bd}}{i_{ind(ni)}} & \frac{v_{bd}}{i_{inq(ni)}} & \frac{v_{bd}}{v_{ind(1)}} & \frac{v_{bd}}{v_{inq(1)}} & \frac{v_{bd}}{v_{ind(2)}} & \frac{v_{bd}}{v_{inq(2)}} & & \frac{v_{bd}}{v_{ind(nv)}} & \frac{v_{bd}}{v_{ind(nv)}} \\ \frac{v_{bq}}{i_{ind(1)}} & \frac{v_{bq}}{i_{inq(1)}} & \frac{v_{bq}}{i_{ind(2)}} & \frac{v_{bq}}{i_{inq(2)}} & \cdots & \frac{v_{bq}}{i_{ind(ni)}} & \frac{v_{bq}}{i_{inq(ni)}} & \frac{v_{bq}}{v_{ind(1)}} & \frac{v_{bq}}{v_{inq(1)}} & \frac{v_{bq}}{v_{ind(2)}} & \frac{v_{bq}}{v_{inq(2)}} & \cdots & \frac{v_{bq}}{v_{ind(nv)}} & \frac{v_{bq}}{v_{ind(nv)}} \end{bmatrix} \quad (10)$$

where the numerator in each entry represents either the current through a branch or the voltage across the branch. The branch number is specified by the subscript of the numerator (with b representing the number of branches in the circuit). The d or q subscript specifies that the output is in the d-axis or q-axis. The denominator in each entry represents an input current or voltage. The input source number is specified by the subscript in parentheses (with ni representing the number of current sources in the circuit and nv representing the number of voltage sources in the circuit). The d and q subscripts indicate whether the input is in the d-axis or q-axis.

The system transfer function generator component **306** can compute transfer functions that specify how circuits interact with one another, and further specifies how circuits interact with controllers. Such transfer functions can be computed based upon a high level netlist, which indicates, for each current source and each voltage source, whether a respective current source is a constant current source or a controlled current source and whether a respective voltage source is a constant voltage source of a controlled voltage source. The system level netlist can also include data that identifies a type of control system used for each controlled current/voltage source.

With reference to FIG. **10**, an exemplary circuit **1000** is illustrated. FIG. **11** depicts an exemplary controller **1100** that can be employed to control the circuit **1000**. Together, the circuit **1000** and the controller **1100** can represent a grid-tied, single-phase inverter that utilizes DQ current control. To model such circuit using the techniques described above, the circuit **1000** can be split into two (average model) circuits, as shown in FIG. **12**. Specifically, FIG. **12** includes a first circuit **1200** and a second circuit **1202**, which represents the circuit **1000** shown in FIG. **10**. It is not shown in FIGS. **10-12** how i inv is derived. Such current can be found using instantaneous power as follows:

$$i_{inv} = \frac{v_{av} i_L}{v_{dc}} \tag{11}$$

The transfer functions describing the circuits **1200** and **1202** can be generated by the DC transfer function generator component **302** and the DQ transfer function generator component **304**, as described above. Accordingly, a system-level netlist that takes into consideration the controller can include the set of transfer functions generated from the circuit netlist(s), system inputs, transfer functions (different from those generated by the components **302** and **304**), multiplication, inversion, delay, from DQ, and to DQ.

With reference now to FIG. **13**, an exemplary methodology **1300** that facilitates analyzing at least one operational characteristic of a physical system is illustrated. The methodology **1300** starts at **1302**, and at **1304** a netlist that is representative of a physical system is received, wherein the physical system can be an electrical system, a mechanical system, an electromechanical system, an electrochemical system, or an electromagnetic system. As noted above, the netlist includes data that is indicative of types of elements and respective values for the elements in the physical system. In a particular example, the netlist can be representative of an electrical system that is coupled to an energy storage device.

At **1306**, a transfer function of the physical system is computed based upon the netlist. Such computation can occur responsive to receipt of the netlist at **1304**. At **1308**, at least one operational characteristic of the physical system is analyzed, wherein analysis of the operational characteristic of the system comprises outputting graphical data to a display screen that is indicative of the at least one operational characteristic. In an example, the netlist can be representative of an electrical system that is coupled to an energy storage device. Accordingly, analyzing the at least one operational characteristic of the electrical system can comprise identifying a resonant frequency corresponding to the electrical system. It is further to be ascertained that at **1306** a plurality of transfer functions of the electrical system can be computed, wherein the plurality of transfer functions comprise at least one of an input-to-output transfer function, a control-to-output transfer function, an input impedance transfer function, or an output impedance transfer function. The methodology **1300** completes at **1310**.

With reference now to FIG. **14**, an exemplary methodology **1400** that facilitates computing transfer functions for an electrical system is illustrated. The methodology **1400** starts at **1402**, and at **1404** an interactive graphical user interface is presented to a user, wherein the interactive graphical user interface facilitates generation of schematic diagrams that are representative of respective electrical systems. Accordingly, the user can generate a schematic diagram of an electrical system by coupling together elements to form nodes and branches.

At **1406**, a schematic diagram is received by way of the interactive graphical user interface, wherein the schematic diagram is representative of an electrical system comprising circuit elements. Such circuit elements may include resistors, inductors, capacitors, voltage sources, and/or current sources. Optionally, the circuit elements can include control system elements. At **1408**, responsive to receiving the schematic diagram at **1406**, a netlist is automatically generated, wherein the netlist comprises values that are indicative of the respective types of the circuit elements and the structure of the electrical system. Furthermore, the netlist can include values for parameters of the elements including resistance values, capacitance values, etc.

At **1410**, transfer functions for the electrical system are computed based upon the netlist generated at **1408**. The methodology **1400** completes at **1412**.

Referring now to FIG. **15**, a high-level illustration of an exemplary computing device **1500** that can be used in accordance with the tools, systems, and methodologies disclosed herein is illustrated. For instance, the computing device **1500** may be used in connection with a tool that computes subsystem-level transfer functions. By way of another example, the computing device **1500** can be used in connection with a tool that computes system-level transfer functions, wherein a physical system includes a controller. The computing device **1500** includes at least one processor **1502** that executes instructions that are stored in a memory **1504**. The instructions may be, for instance, instructions for implementing functionality described as being carried out by one or more components discussed above or instructions for implementing one or more of the methods described above. The processor **1502** may access the memory **1504** by way of a system bus **1506**. In addition to storing executable instructions, the memory **1504** may also store netlists, schematic system diagrams, etc.

The computing device **1500** additionally includes a data store **1508** that is accessible by the processor **1502** by way of the system bus **1506**. The data store **1508** may include executable instructions, netlists, schematic system diagrams, etc. The computing device **1500** also includes an input interface **1510** that allows external devices to communicate with the computing device **1500**. For instance, the input interface **1510** may be used to receive instructions from an external computer device, from a user, etc. The computing device **1500** also includes an output interface **1512** that interfaces the computing device **1500** with one or more external devices. For example, the computing device **1500** may display text, images, etc. by way of the output interface **1512**.

It is contemplated that the external devices that communicate with the computing device **1500** via the input interface **1510** and the output interface **1512** can be included in an environment that provides substantially any type of user interface with which a user can interact. Examples of user interface types include graphical user interfaces, natural user interfaces, and so forth. For instance, a graphical user interface may accept input from a user employing input device(s) such as a keyboard, mouse, remote control, or the like and provide output on an output device such as a display. Further, a natural user interface may enable a user to interact with the computing device **1500** in a manner free from constraints imposed by input device such as keyboards, mice, remote controls, and the like. Rather, a natural user interface can rely on speech recognition, touch and stylus recognition, gesture recognition both on screen and adjacent to the screen, air gestures, head and eye tracking, voice and speech, vision, touch, gestures, machine intelligence, and so forth.

Additionally, while illustrated as a single system, it is to be understood that the computing device **1500** may be a distributed system. Thus, for instance, several devices may be in communication by way of a network connection and may collectively perform tasks described as being performed by the computing device **1500**.

Various functions described herein can be implemented in hardware, software, or any combination thereof. If implemented in software, the functions can be stored on or transmitted over as one or more instructions or code on a computer-readable medium. Computer-readable media includes

computer-readable storage media. A computer-readable storage media can be any available storage media that can be accessed by a computer. By way of example, and not limitation, such computer-readable storage media can comprise RAM, ROM, EEPROM, CD-ROM or other optical disk storage, magnetic disk storage or other magnetic storage devices, or any other medium that can be used to carry or store desired program code in the form of instructions or data structures and that can be accessed by a computer. Disk and disc, as used herein, include compact disc (CD), laser disc, optical disc, digital versatile disc (DVD), floppy disk, and Blu-ray disc (BD), where disks usually reproduce data magnetically and discs usually reproduce data optically with lasers. Further, a propagated signal is not included within the scope of computer-readable storage media. Computer-readable media also includes communication media including any medium that facilitates transfer of a computer program from one place to another. A connection, for instance, can be a communication medium. For example, if the software is transmitted from a website, server, or other remote source using a coaxial cable, fiber optic cable, twisted pair, digital subscriber line (DSL), or wireless technologies such as infrared, radio, and microwave, then the coaxial cable, fiber optic cable, twisted pair, DSL, or wireless technologies such as infrared, radio and microwave are included in the definition of communication medium. Combinations of the above should also be included within the scope of computer-readable media.

Alternatively, or in addition, the functionally described herein can be performed, at least in part, by one or more hardware logic components. For example, and without limitation, illustrative types of hardware logic components that can be used include Field-programmable Gate Arrays (FPGAs), Program-specific Integrated Circuits (ASICs), Program-specific Standard Products (ASSPs), System-on-a-chip systems (SOCs), Complex Programmable Logic Devices (CPLDs), etc.

What has been described above includes examples of one or more embodiments. It is, of course, not possible to describe every conceivable modification and alteration of the above devices or methodologies for purposes of describing the aforementioned aspects, but one of ordinary skill in the art can recognize that many further modifications and permutations of various aspects are possible. Accordingly, the described aspects are intended to embrace all such alterations, modifications, and variations that fall within the spirit and scope of the appended claims. Furthermore, to the extent that the term "includes" is used in either the details description or the claims, such term is intended to be inclusive in a manner similar to the term "comprising" as "comprising" is interpreted when employed as a transitional word in a claim.

What is claimed is:

1. A method executed by a processor of a computing device, the method comprising:

receiving a netlist that is representative of a physical system, the netlist comprising data that is indicative of types of elements and respective values for the elements in the physical system, the physical system being one of an electrical system, an electromechanical system, an electrochemical system, a mechanical system, or an electromagnetic system;

responsive to receiving the netlist, computing a transfer function for the physical system based at least in part upon the data that is indicative of the types of the elements and the respective values for the elements; and

analyzing at least one operational characteristic of the physical system based at least in part upon the transfer function and at least partially based on a direct-quadrature transfer function generator component, wherein the analyzing comprises outputting graphical data to a display screen that is indicative of the at least one operational characteristic.

2. The method of claim **1**, wherein the physical system being an electrical system, the electrical system coupled to an energy storage device, and wherein the analyzing the at least one operational characteristic of the electrical system comprises identifying a resonant frequency of the electrical system.

3. The method of claim **1**, further comprising:

displaying a plurality of selectable system elements;

receiving user commands, the user commands selecting and arranging the selectable system elements to represent the physical system; and

computing the netlist based upon the user commands.

4. The method of claim **1**, wherein a plurality of transfer functions are computed for the physical system.

5. The method of claim **4**, wherein the plurality of transfer functions comprises at least one of an input-to-output transfer function, a control-to-output transfer function, an input impedance transfer function, or an output impedance transfer function.

6. The method of claim **4**, wherein the physical system comprises a circuit, and wherein computing the plurality of transfer functions comprises computing at least one transfer function for the circuit.

7. The method of claim **6**, wherein the computing at least one transfer function for the circuit comprises computing a direct current transfer function for the circuit.

8. The method of claim **1**, further comprising:

receiving an indication of a frequency at which the operational characteristic is to be analyzed; and

computing the transfer function based upon the indication of the frequency.

9. The method of claim **1**, the physical system being an electrical system, the netlist formed as a matrix, wherein each row of the matrix comprises data that is indicative of a type of a respective element, a node to which a positive terminal of the respective element is attached, a node to which a negative terminal of the respective element is attached, and a value for the respective element.

10. The method of claim **9**, wherein rows of the netlist are arranged based upon types of elements in the electrical system represented in the netlist.

11. The method of claim **1**, wherein the physical system comprises a controller, and wherein the transfer function at least partially represents an impact of the controller on output of the physical system.

12. A computing device that facilitates computation of transfer functions, the computing device comprising:

a processor module; and

a memory module that comprises a plurality of components that are executed by the processor module, the plurality of components comprising:

a receiver component that receives a netlist, the netlist comprising data that is indicative of elements of an electrical system and structure of the electrical system; and

a transfer function deriver component that computes a transfer function of the electrical system based at least in part upon the netlist and at least partially based on a direct-quadrature transfer function generator component.

13. The computing device of claim **12**, the plurality of components further comprising a netlist generator compo-

nent that receives a schematic diagram of the electrical system and generates the netlist based upon the schematic diagram of the electrical system.

14. The computing device of claim **13**, wherein the netlist generator component further receives values for the elements of the electrical system, the transfer function deriver component computes the transfer function of the electrical system based at least in part upon the values for the elements of the electrical system.

15. The computing device of claim **12**, wherein the electrical system comprises a control circuit.

16. The computing device of claim **12**, the plurality of components further comprising a system analyzer component that receives the transfer function for the electrical system and a measured input to the electrical system in a frequency domain, the system analyzer component applies the transfer function to the measured input to generate a corresponding output of the electrical system in the frequency domain.

17. The computing device of claim **16**, the plurality of components further comprising a display component that displays graphical data that is indicative of the output of the electrical system in the frequency domain.

18. The computing device of claim **12**, wherein the transfer function is one of an input-to-output transfer function, a control-to-output transfer function, an input impedance transfer function, or an output impedance transfer function.

19. The computing device of claim **12**, wherein the receiver component receives an update to the netlist, and wherein the transfer function deriver component computes a new transfer function for the electrical system based upon the update to the netlist.

20. A non-transitory computer-readable storage medium comprising instructions that, when executed by a processor, cause the processor to perform acts comprising:

presenting an interactive graphical user interface that facilitates generation of schematic diagrams that are representative of respective electrical systems;

receiving a schematic diagram by way of the interactive graphical user interface, the schematic diagram representative of an electrical system comprising circuit elements;

receiving a frequency at which the electrical system is to be analyzed;

responsive to receiving the schematic diagram, generating a netlist that comprises values that are indicative of respective types of the circuit elements and structure of the electrical system; and

computing transfer functions for the electrical system for the received frequency based upon the netlist and at least partially based on a direct-quadrature transfer function generator component.

* * * * *