U.S. DEPARTMENT OF ENERGY

Energy Storage Systems

Research Program

(DOE / ESS)

Quarterly Progress Report

October 2009 — December 2009

(Fiscal Year 2010 / 1st Quarter)

Produced By:

DOE Energy Storage Systems Research Program

Sandia National Laboratories

Albuquerque NM

(SNL / ESS)

Projects

SiC-Based Solid-State Fault Current Control System for Vulnerability Reduction of Power Distribution Networks 3

Large Area SiC GTO Thyristor Development 5

High Temperature Fully Programmable Power Controller for High Density Power Electronics 8

Development and Validation of Advanced Energy Management Control Algorithms for Short or Long Term Energy Storage 10

Advanced Power Devices and Converters 12

NMSU Senior Design Project 14

Scale Model Demonstration of Storage in Customer Driven Microgrids 15

Design, Development, Testing, and Demonstration of a 10-MVA ETO-based StatCom 17

Power Electronics Reliability 20

Electrochemical Solution Growth of Bulk GaN for Power Electronics Substrates 22

Dynamic Islanding: Improving Electric Service Reliability with Energy Storage 24

Superconducting Flywheel Development 28

Carbon-Enhanced Lead-Acid Battery and EC Testing 31

SiC-Based Solid-State Fault Current Control System for Vulnerability Reduction of Power Distribution Networks

Date Project Began:	June 30, 2008
Dates for this Project Report:	October 2009
Sandia Project Manager (PM):	Stan Atcitty
Contractor:	Arkansas Power Electronics International, Inc. (APEI)
Partner(s):	University of Arkansas

Project Description:

This Small Business Technology Transfer Research Phase I project seeks to develop high-voltage, high-performance Solid-State Fault Current Controller (SSFCC) technology utilizing Silicon Carbide (SiC) gate-turn-off thyristors (GTOs). The proposed SSFCC technology is able to control the power delivery to all types of faults very rapidly (<< 1ms) allowing for the minimization of power quality issues (i.e., voltage sags, oscillation, voltage and current harmonics, etc.). Moreover, when combined with existing lower-cost network equipment such as computer-controller sectionalizers, the proposed technology allows for rapid reconfiguration of the power network. This capability greatly minimizes recovery time and vulnerability of the network in the event of a large-scale natural disaster. Lastly, the proposed solution offers modularity, flexibility, and low operation/maintenance, allowing for widespread adoption and deployment of the technology.

The team has already proven the feasibility of the proposed concept by developing a low-power, low-voltage SiC-based SSFCC prototype. Research carried out during the Phase I portion of this STTR project demonstrated three key additional points that can be summarized as follows: a) system scalability (i.e., 4.16 kV to 13.8 kV SSFCC systems using 4.5 kV device technology) , b) system functionality (i.e., fast and accurate fault current control) and c) system added value (i.e., improved power quality).

For the Phase II portion of this STTR project, the team will focus on demonstrating the benefits of using SiC-based SSFCC device technology. The team will accomplish this by 1) extensively testing a single-phase 4160V-class SiC-based SSFCC hardware prototype available to this program, and 2) determining cost benefits associated with the unprecedented level of protection that this new SSFCC technology provides. In addition, during Phase II the team will also target several technical goals with the objective of developing a deep understanding of all benefits and capabilities associated with the mass deployment of SSFCC devices. This knowledge will be a key piece of information needed by utility companies and other users before SSFCC devices can be widely accepted.

Key Project Events:

Both the University of Arkansas and APEI, Inc. researchers have primarily focused on literature review for the past quarter to develop the necessary technical background and to ensure that the efforts expended in the project are appropriately directed.

Project Status:

The project is reported to be on schedule. University of Arkansas has initiated activities under Task One while APEI, Inc. has initiated activities under Task Two.

University of Arkansas researchers are currently focusing on the overall philosophy of operation for the SSFCC (Task 1). This includes assessing the potential for simulation of the selected distribution substation using the Power Systems Computer Aided Design (PSCAD) software. Although the system could be simulated in PSCAD, the main issue is the controller implementation. For example, coordination of a SSFCC with a circuit breaker (CB) may require implementation of instantaneous and time-delay opening/closing operations before lock out. This type of simulation can only be done with analog components in PSCAD which is cumbersome. Having the feature of writing code in C mimicking the operation of the controller would be preferred. Unfortunately, this is not available in PSCAD. This issue will be evaluated further in the next quarter.
Under the same task, University of Arkansas researchers are also currently evaluating the different established methodologies for coordination (e.g., fuse-to-fuse, recloser-to-fuse, circuit breaker-to-recloser, etc.) to identify similarities with the coordination of a SSFCC with CB, recloser and fuse. The main goal behind the development of defined methodologies for coordinating the SSFCC with the traditional protective equipment is to facilitate the widespread use of this new protection device. Using these methodologies as a reference, utility engineers will find it easier to include SSFCC devices when developing protection schemes for future electric power distribution systems, in particular, those systems falling under the "smart grid" definition.

APEI, Inc. engineers focusing on the advanced SSFCC controller developments are currently conducting a literature review (Task 2, subtasks A and B). This literature review has focused primarily on the following:

- Conventional relaying techniques and applications
- Numerical fault detection algorithms
- Power system transients
- Control schemes for reclosing operations
- Possible options/additional features for the controller
- Current, voltage, and other sensing options

This literature review is being conducted in order to better understand the requirements of the SSFCC controller prior to beginning the hardware development efforts. In addition to this literature review, engineers are currently considering the best means to simulate several possible control algorithms in order to observe their dependability and security. Afterwards, hardware development will begin. These efforts are currently expected to be completed by the end of the next quarter.

[Return to TOC]

Large Area SiC GTO Thyristor Development

Date Project Began:	FY07
Dates for this Project Report:	Oct 2009 – Dec 2009
Sandia Project Manager (PM):	Stan Atcitty
Contractor:	GeneSiC Semiconductor
Partner(s):	Princeton Power Systems, Dow Corning Corporation

Project Description:

The goal at the end of Phase II of this program is to achieve the following from a Silicon Carbide (SiC) based Gate Turn Off (GTO) Thyristor:

- Blocking Voltage > 10-16 kV
- Packaged device on-state Current > 100 A
- Switching frequency > 20 kHz
- Cost effective solution that can be deployed on a large scale

Key Project Events:

- Developed a novel two-level metallization process incorporating a gap fill layer for high-voltage SiC Thyristors.
- Packaged few GTO Thyristors and wire-bond tests performed to evaluate pad metal adhesion.
- Designed Mask sets and process flow for the next batch of 12 kV SiC Thyristors.

Project Status:

In this reporting period, detailed packaging design and experiments; New mask design; and Novel two level metallization processing were accomplished. The package design for wire-bond-less packaging of >12kV/100A SiC GTO Thyristors were ascertained, and some preliminary experiments were conducted on SiC GTO devices from an earlier batch of devices. As a starting point, wire bonds were used to bond some chips in packages to ascertain the feasibility of the proposed approach. In addition, the mask and process design for the next batch of 12 kV devices was finalized. This mask set is considerably different from previous mask set because it does not use a “reticle” based approach. Larger devices are bunched together in the middle in order to maximize yields on larger devices. On the fabrication side, a novel two-level metallization process incorporating a gap fill layer was developed. The next steps in this project include fabrication of the 12 kV GTO Thyristors followed by detailed switching measurements to examine the turn-on and turn-off characteristics of different thyristor designs.

Project Pictures / Graphs / Tables:

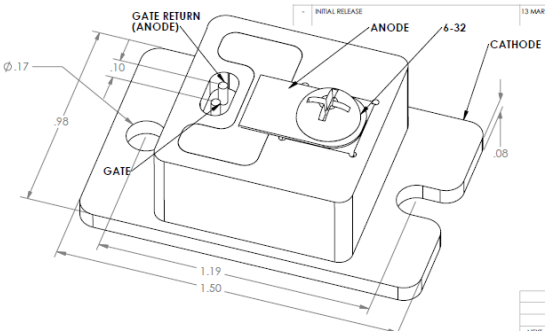

Figure 1: Drawing of the package used for Appled Pulsed Power (GeneSiC's packaging partner) high-voltage thyristors. The backside cathode contact is connected to the base-plate. A large anode-cathode bias (VAK) is applied between the large anode contact on the top side and the backside cathode contact. After applying a VAK > 2 kV, the device is triggered to its on-state by applying a trigger pulse between the gate pin and the second anode (gate return) pin.

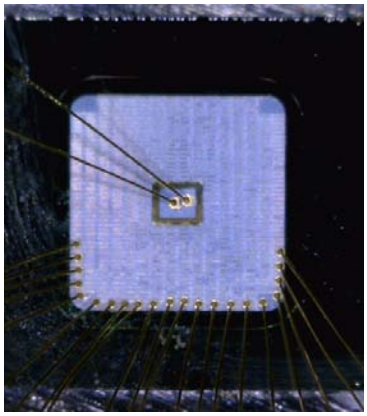

(a)

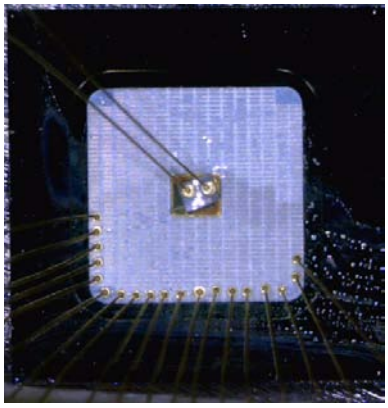

(b)

Figure 2: Optical micrographs taken after wire bond placement on the GTO Thyristors. The metallization is intact for the device shown in (a), whereas the wire bonding resulted in loss of gate pad metal adhesion for the device shown in (b).

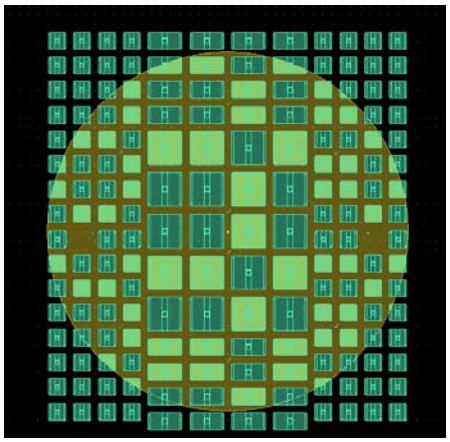

Figure 3: Non-reticle based device layout employed for fabricating GeneSiC's 12 kV SiC Thyristors to maximize the yield of large area Thyristors.

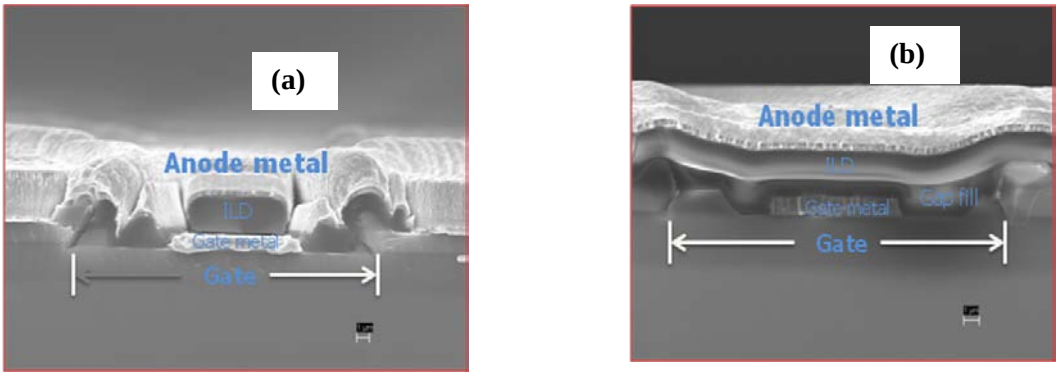

Figure 4 (a) Cross-sectional SCANNING ELECTRON MICROSCOPE (SEM) image depicting the initial 2-level metallization process without a gap fill layer and (b) cross-sectional SEM image depicting the improved 2-level metallization process with the gap fill layer.

[Return to TOC]

High Temperature Fully Programmable Power Controller for High Density Power Electronics

Date Project Began:	FY2008
Dates for this Project Report:	Oct – Dec 2009
Sandia Project Manager (PM):	Stan Atcitty
Contractor:	Joe Henfling
Partner(s):	SJT Micropower, PermaWorks, Honeywell SSEC, SemiSouth

Project Description

This project focuses on the design and development of a high-temperature controller that interfaces the High-Temperature Silicon-On-Insulator (HT SOI)-based controller to Silicon-Carbide (SiC) power switches. The developed high temperature controller creates the basic building block for power converters, motor controllers, and a host of industrial control applications using American-developed technology. Sandia will work with Honeywell and other US component manufacturers to design a basic power controller interfacing HT SOI electronics with SiC power devices that would reliably operate in an environment of 240ºC ,with the junction temperature of the power devices operating up to 300 ºC. These new systems will be more reliable, more energy efficient and >30% smaller than existing silicon solutions.

Key Project Events

- Phase I final report complete
- Initial Matlab simulation of output filter complete (Phase II activity)
- Phase 1 results presented at HiTEN (High Temperature Electronics Network)

Project Status

Phase I was completed in May 2009. The final report in the form of a conference paper is complete and is available upon request. A preliminary study of the output filter is complete. Consideration to high temperature component availability determined the selection of the filter passive devices. Figure 1 shows the filter response when the inductor is varied from 0 to 200 uH, with a fixed capacitor value of 1 uF. Figure 2 depicts the pole location and step response when utilizing a 1 uF capacitor and a 150uH inductor. The simulation results indicate that an adequate filter can be designed using available components. Phase two objectives include a version 2 board that will incorporate testing of this output filter design.

The results of phase I were presented at HiTEN in September. HiTEN is an international conference that enables researchers in the area of HT electronics an opportunity to discuss possible solutions to a wide variety of unique challenges facing the HT electronics community. This is a biannual event held this year at St. Catherine's College in Oxford, UK. The talk was well-received and provided a conduit to inform the HT electronics industry of another application for HT components and sensors. Improvements to the US utility transmission network by utilizing HT electronics is a topic that normally is not considered; this presentation helped to inform industry and academia of the many benefits of utilizing HT electronics for high power applications, such as a highly integrated, compact and easily re-configurable substation.

Pictures / Tables / Graphs

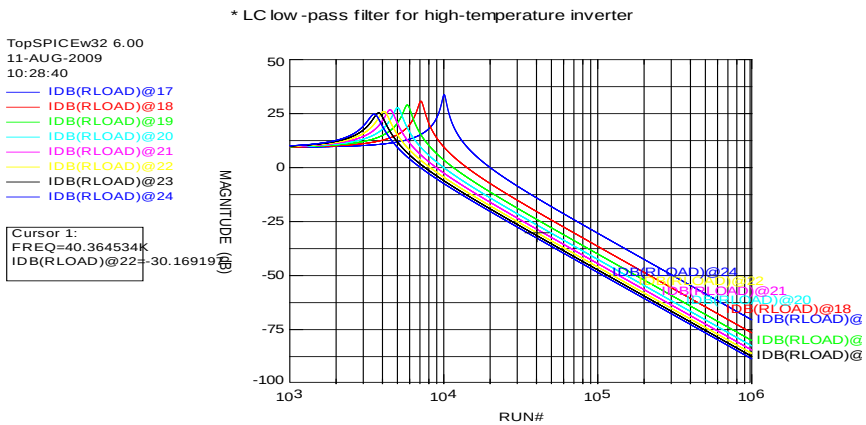

Figure 1 shows the filter response with a 1 uF capacitor and a variable inductor value ranging from 1 to 200uH.

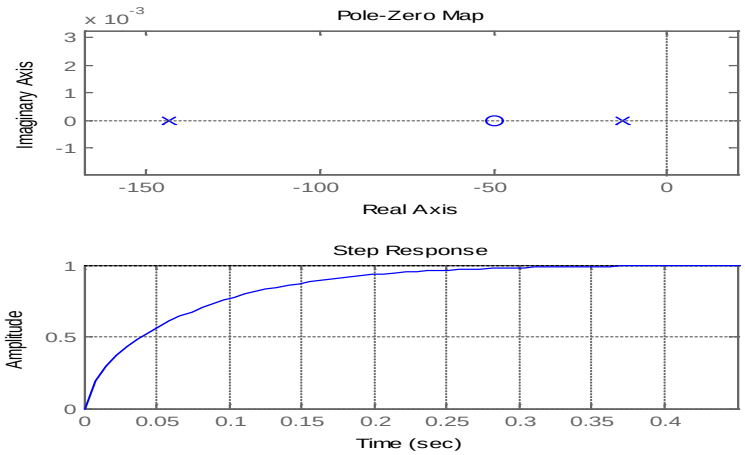

Figure 2 depicts the pole location and step response of the simulated output filter.

[Return to TOC]

Development and Validation of Advanced Energy Management Control Algorithms for Short or Long Term Energy Storage

Date Project Began:	FY2008
Dates for this Project Report:	October – December 2009
Sandia Project Manager (PM):	Stan Atcitty
Contractor:	Missouri University of Science & Technology
Partner(s):	North Carolina State University

Project Description

From previous DOE/Sandia support, the Missouri University of Science & Technology (MST) has developed a Hardware-in-the-loop (HIL) test-bed that mimics the electric power grid. This laboratory is used to develop the basis for a plug-and-play smart grid.

The current project focuses on characterizing different load types, resources, and configuration of a mid-sized distribution system, development of a computer models of a power-electronics-based microgrid, development of formal security models, superimposing the control nodes on a microgrid, developing theories and interface models for cooperating power electronics devices, and development and testing of distributed energy management strategies. In addition, a new Emitter Turn Off Thyristor (ETO) Light converter based series compensating Distributed Power Flow Controller (DPFC) was proposed.

Key Project Events

- voltage mode control (VMC) and current mode control (CMC) for the dc-dc converter were compared and contrasted
- The control-to-output transfer function for the boost converter operating in discontinuous control mode was derived and the stability of the converter was validated
- A paper for publication was written
- Summarized the proposed ETO-based Distributed Power Flow Controller (DPFC) development. Proposed the promising new applications of DPFC in distribution system and demand side management.
- Proposed the possible future research work for DPFC.

Project Status

ongoing

Project Pictures / Graphs / Tables

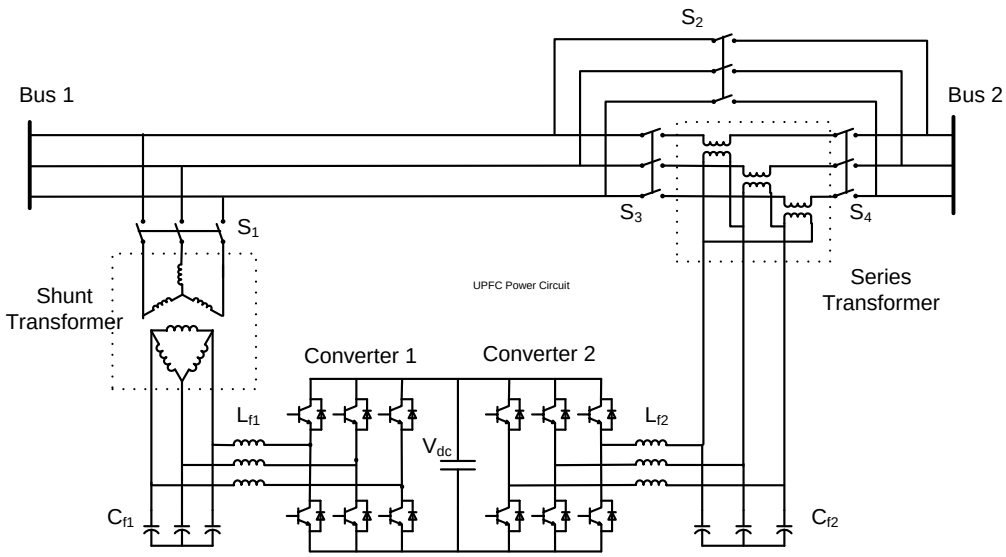

Figure 1: UPQC laboratory schematic

Unlike the conventional lumped high rating (10-300MVA) series compensation converter, the proposed ETO Light converter based DPFC uses multiple scaled-down (1-2MVA) single-phase power converters to dynamically control the active power flow through the transmission lines. The power density is enhanced and the cost is reduced by applying the ETO Light converter. The DPFC has the self-power, self-protection and self-control functions. The standard modular design of DPFC enables the high reliability, short design cycle and the easy installation/maintenance of power converter. Fig. 2 shows the concept diagram of DPFC.

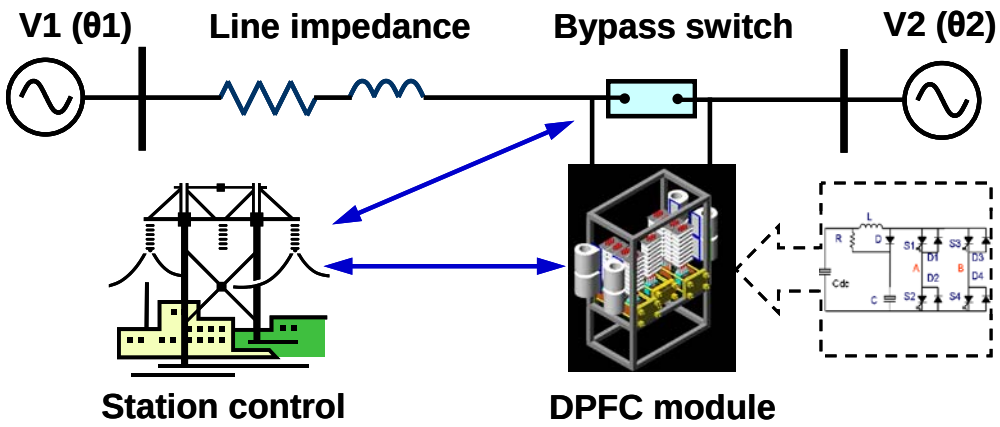

Fig.2 Proposed DPFC system

[Return to TOC]

Advanced Power Devices and Converters

Date Project Began:	FY2008
Dates for this Project Report:	Oct - Dec 2009
Sandia Project Manager (PM):	Stan Atcitty
Contractor:	NC State University
Partner(s):	None

Project Description

Under the support of DOE's Energy Storage Program, the Gen-4 Emitter Turn Off Thyrsitor (ETO) (Light Triggered ETO) has been developed. Its application in DC application such as a Voltage Source Converter (VSC) has been studied in the previous quarters. ETOs can also be used for AC applications such as in a solid state circuit breaker (SSCB). FY07 4th quarter and future FY08 project support focus on SSCB application of the ETO. SSCB is also the key component used in solid state fault current limiter (SSFCL). The project focus is to demonstration 1) how to achieve ETO control power self generation under AC operation conditions, 2) how to achieve excellent device series connection. Both are necessary requirements for SSCB application.

Key Project Events

- The impact of Metal Oxide Semiconductor Field Effect Transistor (MOSFET) driver on dynamic voltage balance is discussed in detail. The investigation of driver characteristic is being conducted and ongoing.
- A high current DC power supply has been ordered and setup of ETO and heatpipe has been built in the lab for thermal test.

Project Status

On-going in FY10

Pictures / Tables / Graphs

Due to the characteristic of MOSFET driver and self-power strategy, when command off signal arrives at two series connected ETOs, there is a time difference between MOSFET turn-off processes, which results in dynamic voltage imbalance between two ETOs. Fig. 1 shows this phenomenon.

To investigate the root reason of MOSFET driver characteristic, some experiments on MOSFET driver and other related circuit was conducted. The effort to find the root reason is still ongoing.

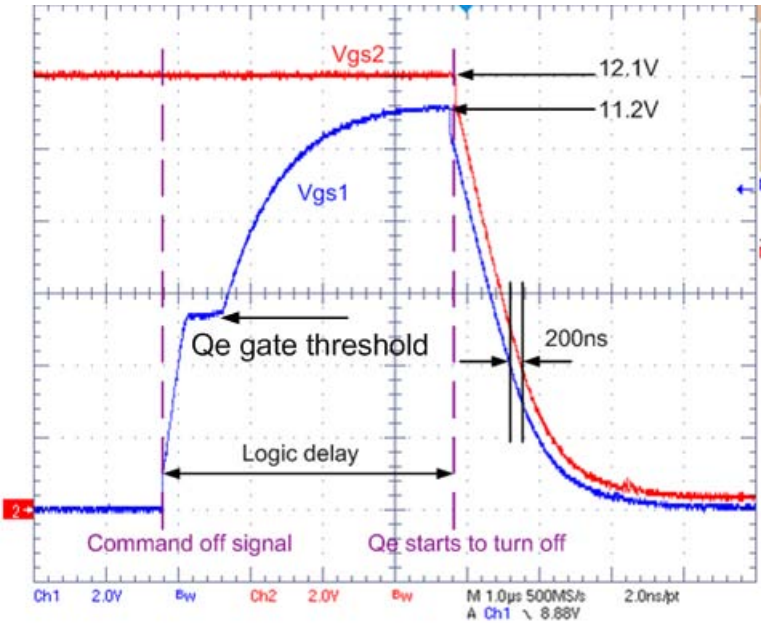

Fig. 1. ETO Turn-off of waveform with solution

To verify the thermal performance of ETO device and customer designed heatpipe, a high current DC power supply has been ordered and test setup has been built in the lab. The thermal test on ETO and heatpipe is expected to be conducted in next quarter. Fig. 2 and Fig. 3 show the DC power supply and test setup.

Fig. 2 High current DC power supply

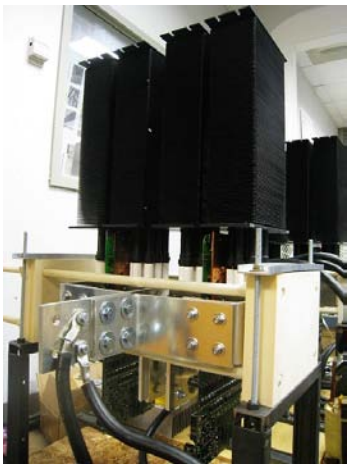

Fig. 3 Thermal test setup

[Return to TOC]

NMSU Senior Design Project

Date Project Began:	FY2008
Dates for this Project Report:	October-December, 2009
Sandia Project Manager (PM):	Stan Atcitty
Contractor:	New Mexico State University
Partner(s):	None

Project Description

The Klipsch School of Electrical and Computer Engineering at NMSU, requires all BSEE students to complete a six-credit Senior Design class. Students with senior standing must design a reasonably complex system, drawing upon several specialties such as power, electronics, computers, control, etc. The class also provides significant experience in teamwork, written and oral communication, and leadership.

Since FY02, NMSU has developed and offered such design classes in the general area of electric energy storage systems. Previous projects involved the design of a "Super-capacitor Test System". Design project classes, "Photovoltaic System with Storage" were offered in FY'05 - FY'08 Teams successfully designed and installed a 300 W Photovoltaic system with energy storage in an electrochemical capacitor.

Customer-driven microgrids are a paradigm in which customers invest in such generation, and the utility 'enables' microgrid operation. The design task given to the students is to develop necessary hardware and controls so that the "PV with Energy Storage" system previously developed can participate in an energy market by responding to price signals. The task given to the 2008-2009 team is to develop a 500 W, 120/208 V, 60 Hz, three-phase inverter (Figure 2). The inverter has been demonstrated on a single-phase basis. The basic control has been developed using discrete logic.

Project Status

The design class was not offered during the Summer and Fall Sessions 2009. However, several graduate students have worked on developing materials- notes, hardware and software- for the 2010 Spring semester offering.

Four students are expected to register for the 2010 Spring offering of the class. The design project will be in the area of integrating grid-tied renewable generation, storage, and demand control in residential applications. The principal goal is to develop smart, residential system- compatible, switching elements with local sensing/computation capability and wireless communication

.Project Pictures / Graphs / Tables

none

[Return to TOC]

Scale Model Demonstration of Storage in Customer Driven Microgrids

Date Project Began:	FY2008
Dates for this Project Report:	October-December, 2009
Sandia Project Manager (PM):	Stan Atcitty
Contractor:	New Mexico State University
Partner(s):	None

Project Description

It has become abundantly clear that large-scale penetration of renewable-based distributed resources is impossible without attendant application of centralized and distributed storage. It is, therefore, important to examine the nature and application of small storage systems in so-called 'customer-driven' microgrids. The customer-driven paradigm suggests that distribution microgrids with substantial penetration will evolve from the customer side. Small residential and commercial customers, who constitute as much as 35-50% of load, will invest in energy sources. The distribution utility services will now include network service, aggregation service for economic benefit, and reliability management through islanding for disturbances.

The El Paso Electric Power Laboratory at NMSU is used to demonstrate the integration of storage-based or storage-supported distributed generation in distribution systems. The goals of this project are:

1. The interconnection of sources to a distribution system and the steady state impact,
2. The response of sources during disturbances,
3. The role of storage in steady state feeder management and during disturbances, and
4. The role of storage in supporting islanded operation.

Wireless communication systems for network control were completed and bench-tested. The systems are now being installed. The Zigbee-based system to simulate a substation is illustrated in Figure 2. The circuit breakers interconnect utility sources and are controlled by a microprocessor and a communication interface. In turn, the substation is controlled from a SUPERVISORY CONTROL AND DATA ACQUISITION (SCADA) system. Identical controllers will be used for micro-sources such as the laboratory Photovoltaic (PV) Inverter and storage systems. Work was also initiated on implementing multi-agent systems for microgrid management. Finally, the prototyping of fundamental embedded controllers for inverter control has been completed.

Project Status

The Wireless communication installation has been completed. The Zigbee-based system to simulate a substation is illustrated in Figure 1. The circuit breakers interconnect utility sources and are controlled by a microprocessor and a communication interface. In turn, the substation is controlled from a SCADA system. Identical controllers will be used for micro-sources such as the laboratory PV and storage systems.

Software to implement intelligent agents in the controller has been completed. The previously reported capacity discovery algorithm [1] was successfully tested. The algorithm for distributed computation of power flow solutions was completed. Note that the controller can be embedded in the substation or in power electronic systems. The long term goal is to show that these agents can manage the network components, including the PV inverter. Simulation studies on agent based controllers have demonstrated the ability of these agents to solve power flow conditions in the network in a distributed manner. Work on implementing and demonstrating these controllers will continue in the ensuing quarters.

References

[1] Jain, P., Ranade, S.J., “Capacity Discovery in Customer Driven Microgrids”, North American Power Symposium, Mississippi State University, October 2009

Project Pictures / Graphs / Tables

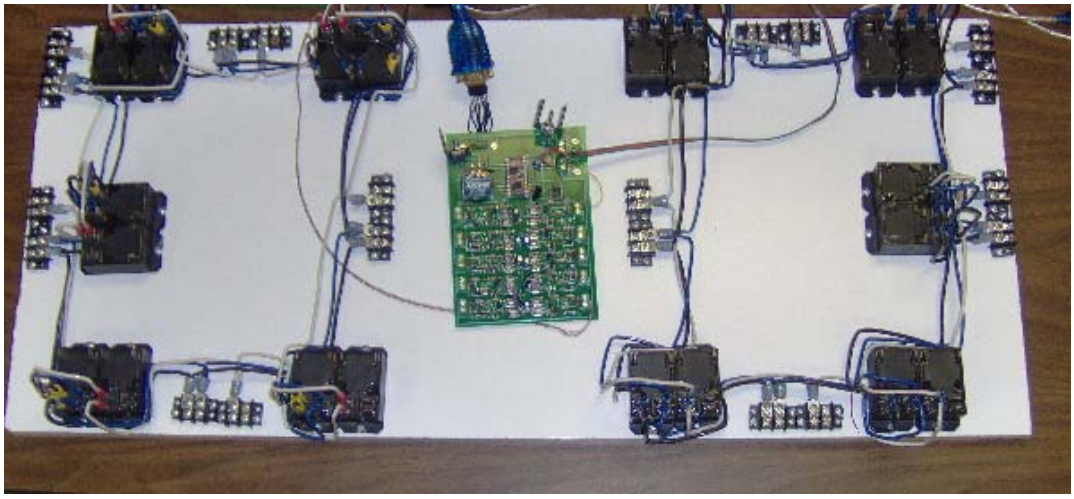

Figure 1 A typical substation arrangement

[Return to TOC]

Design, Development, Testing, and Demonstration of a 10-MVA ETO-based StatCom

Date Project Began:	FY2009
Dates for this Project Report:	Oct – Dec 2009
Sandia Project Manager (PM):	Stan Atcitty
Contractor:	Silicon Power Corporation
Partner(s):	none

Project Description:

The US DOE Energy Storage Program, through Sandia National Laboratories (SNL) and in collaboration with Bonneville Power Administration (BPA), Electric Power Research Institute (EPRI), Tennessee Valley Authority (TVA), and North Carolina State University (NCSU) has developed a semiconductor switch known as the emitter turn-off thyristor (ETO) and the preliminary design for an ETO-based static synchronous compensator (StatCom) and controls. The ETO is a novel semiconductor switch suitable for high-power and high-frequency applications. The ETO has several advantages over Insulated Gate Bipolar Transistor (IGBT) or Gate Turn Off Thyristor (GTO) technology, including low gate drive power, high-frequency of operation, snubberless operation, large safe operating area, and high current and voltage ratings.

The purpose of this project is to complete the design, construction, factory testing, installation, and field demonstration of a full-scale, 10-MVA, ETO-based StatCom for installation at a location in the BPA power system. This is being be arranged in a “phase-gate” approach, in which certain milestones must be met before moving to the next phase. A technical review will be held at the end of each phase. Phase I focuses on design, construction, and factory testing of an ETO-based H-bridge. Once the H-bridge is successfully completed, the second phase will focus on the construction of five additional H-bridges and on the design, construction, and factory testing of a complete StatCom. In the final phase, the StatCom will be installed, integrated, and field tested.

Key Project Events:

None at this point

Project Status:

One of the major milestones for successful completion of Phase 1 of the project is the design of the 1.67MVA H-bridge. This will be followed by assembly and testing. Development tasks have been allocated to the appropriate engineering disciplines and the status of the major schedule tasks are enumerated below:

ETO Test

ETO's specifications were reviewed and the acceptance test was devised**.** Devices were received from NCSU and tested to meet the determined test specification.

Results:

- Two out of four ETO assemblies provided by NCSU passed module level testing, and two failed.
- Because four ETO assemblies are required for a complete H-bridge, the failed assemblies have been returned to NCSU and additional assemblies are in the process of being provided from NCSU to SPCO to permit completion of this task, and as spares to reduce further schedule risk

Electrical Design of H-bridge

The power topology design and simulation pertaining to the Phase 1 test has been completed. Dielectric clearances are under review and the bus work design is underway. Once the bus work is complete, the dielectric clearances can be finalized. Some quotations are being received and reviewed for the copper bus bars.

Thermal Design

Thermal design of the system is underway for the H-bridge and design milestones have been completed, including the airflow verification by simulation. The Curtiss-Wright report [Evaluation of Condon wind farm STATCOM design, Interim Report, January 4, 2008] has been reviewed and the suggestions incorporated in the design; some modifications have been made to reach an optimal design. Blower selection is close to completion and the duct work has been designed and optimized for maximum efficiency of the thermal system. Procurement of ductwork is now in progress.

Mechanical Design

The NCSU design has been reviewed and modifications have been incorporated in the mechanical design for the H-bridge. The final enclosure design is near completion.

Control System Design

The NCSU control design document was reviewed. SPCO is still awaiting NCSU control software for deliverable design review. SPCO has taken steps to devise a control scheme for the local controller for the phase 1 testing. The design is in line with the previous NCSU design; but modifications and improvements are being made where necessary. A commercial FIELD-PROGRAMMABLE GATE ARRAY (FPGA) controller has been procured for the local control of the H-bridge; and the design of the interface card for this board is underway. The hardware design for the control board is under review; and the control software is being developed, as planned, for the final H-bridge testing required for phase 1.

To summarize, the work is progressing at a good pace ,with some set-backs due to delay in receiving the necessary modules and documentations. Additionallyh, SPCO is implementing some necessary design changes in the manufacturability stand point for the H-bridge.

Pictures / Tables / Graphs

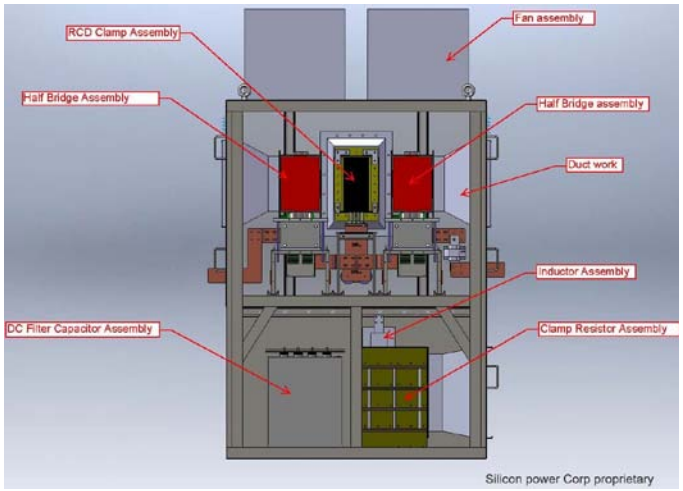

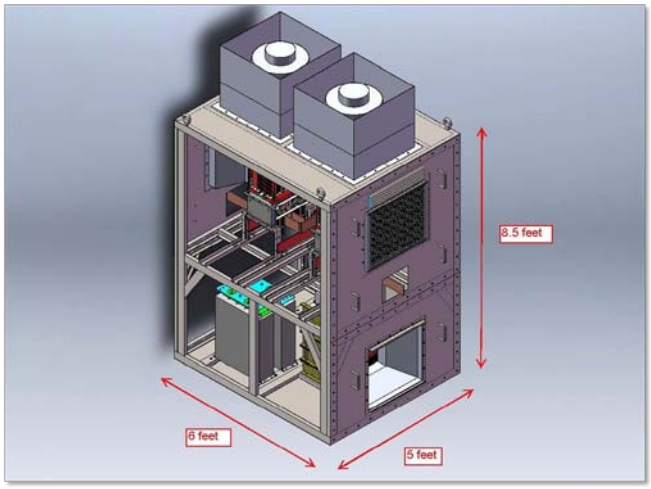

Figure above is the preliminary solid model rendering of th duct work and blowers.

[Return to TOC]

Power Electronics Reliability

Date Project Began:	FY2008
Dates for this Project Report:	October – December 2009
Sandia Project Manager (PM):	Stan Atcitty
Contractor:	Mark A. Smith (SNL)
Partner(s):	Silicon Power Corporation (SPCO)

Project Description:

Sandia National Laboratories is initiating a reliability project to better understand the current and future reliability of power electronics. While anecdotal evidence of major contributors to reliability is available, solid data upon which to base decisions is scarce. The Sandia project will provide the Department of Energy (DOE) and the Power Electronics industry a process for creating a reliability baseline for a power electronics system.

In addition to creating the modeling and analysis process, Sandia will use the process to create a reliability model for a selected application (SPCO's Solid State Current Limiter), using a systems view of the selected equipment. Then opportunities for Prognostics and Health Management (PHM) will be explored; focusing first on those opportunities with the highest reliability return on investment.

Key Project Events:

- October 8, 2009 – Delivered Power Electronics Reliability Analysis presentation at the Annual DOE Peer Review Meeting in Seattle, WA.
- October 24, 2009 – Public report for the DOE and the Power Electronics industry completed and submitted for internal Sandia review.
- October 29, 2009 – Final presentation given to Silicon Power Corporation personnel (including CEO, General Manager, and Engineering Staff) in Malvern, PA.
- November 5, 2009 – Sandia received final reliability data updates from SPCO.
- December 23, 2009 – All internal Sandia review and approval processes completed on the public report, and report sent to DOE.
- December 24, 2009 – Proprietary report and spreadsheets on the SSCL finished and sent to SPCO.

Project Status:

The project has been successfully concluded, as of December 24, 2009. A public report by Mark A. Smith and Stan Atcitty, entitled "*Power Electronics Reliability Analysis*," SAND2009-8377 (December 2009) was issued by Sandia National Laboratories. The SAND report describes a general process for the DOE and the Power Electronics industry to analyze the reliability of any power electronics system. The fault tree for an illustrative example of such a system, which is described in that report, is shown in Figure 1. A separate, customized, reliability analysis of the Solid State Current Limiter was completed and delivered to SPCO for its internal use.

Pictures / Tables / Graphs:

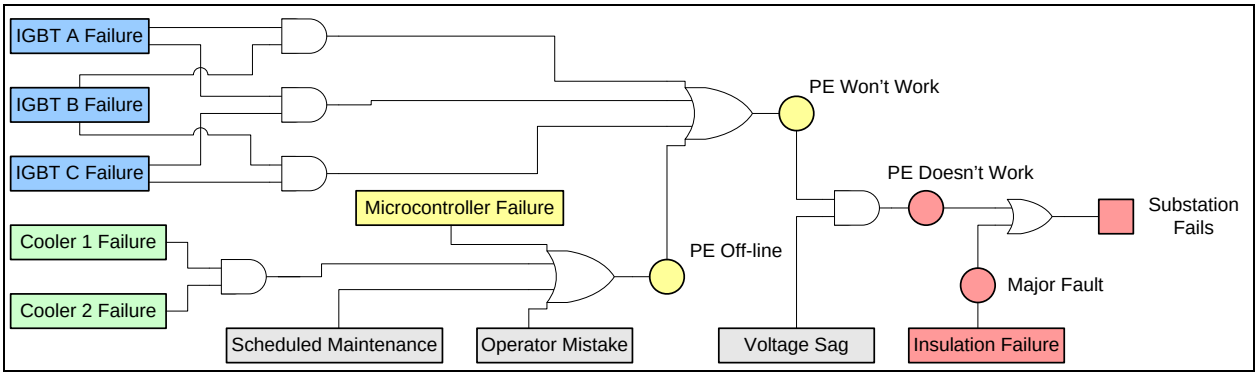

Figure 1: Fault tree for an illustrative hypothetical power electronics device.

[Return to TOC]

Electrochemical Solution Growth of Bulk GaN for Power Electronics Substrates

Date Project Began:	FY2008
Dates for this Project Report:	Oct - Dec, 2009
Sandia Project Manager (PM):	Stan Atcitty
Contractor:	Karen Waldrip (SNL)
Partner(s):	GNOEM Systems, Inc.

Project Description

This project is focused on developing a novel, scalable, economical growth technique for bulk Gallium Nitride (GaN), a critical material for next-generation high temperature power electronics. Large area, high quality bulk GaN is required as a substrate material for growth of highly efficient bipolar transistors for inverters and power conditioning. Attempting to grow GaN in bulk by traditional precipitation methods forces extreme thermodynamic and kinetic conditions, putting these techniques at the extremes of experimental physics, which is unsuitable for large area, cost-effective substrate growth. The Electrochemical Solution Growth (ESG) technique is a novel concept that addresses these issues in a unique way, and is being proven out at Sandia National Laboratories under this program. Its final step in demonstrating feasibility is to deposit high quality GaN on a seed crystal. Initial experiments have shown that it is important to first understand autonucleated growth from solution in order to better choose the experimental conditions for seeded growth. The current activities are focused on understanding the conditions of saturation of nutrients in the molten salt electrolyte solution and the impact of growth conditions on crystal size, growth rate, and quality.

Key Project Events

The near-term milestones have shifted to reflect a discovery of what is believed to be a high quality crystal growth by autonucleation from a saturated molten salt electrolyte solution, and investigate the growth conditions that yield the highest quality and largest area, or volume, crystals. If/when successful, these crystals can be used both as substrates for device growth and as high quality seed crystals in the larger rotating-seed boule growth experiments. The project is on track.

Project Status

- All work this quarter was performed by the contractor, with the exception of characterization work. Much of the contractor's focus this quarter was on delivering a proposal (for which this project was not charged), which impacted progress this quarter.
- Crystal was analyzed by x-ray diffraction and determined to be GaN, coated with salt from the bath. Scanning Electron Microscopy (SEM) and Electron Dispersive Spectroscopy (EDS) indicated that the salt was covering the GaN crystal. After multiple washings were performed to remove the coating, the crystal was found to be an agglomerate of small GaN crystallites and salt, rather than the hoped-for large single crystal of GaN. Back to the lab.
- Two additional experiments were performed to assess the effects of various geometries on crystal growth. Disadvantages were discovered with each approach and,thus, returned to the original configuration.
- One experiment was performed using an alternative source of gallium precursor, $LiGaCl_4$, since it is believed that electrochemically-oxidized gallium is quickly converted to this compound ($LiGaCl_4$) in the salt bath. Transparent crystals with the proper crystalline shape have been isolated from the salt and are being sent to Sandia for characterization. Crystals are small, perhaps 250 microns in the longest dimension. Experiments have been designed to try to grow larger crystals by this method.

Pictures / Tables / Graphs

None at present.

[Return to TOC]

Dynamic Islanding: Improving Electric Service Reliability with Energy Storage

Date Project Began:	August 2008
Dates for this Project Report:	October - December, 2009
Sandia Project Manager (PM):	Nancy Clark
Contractor:	American Electric Power (AEP)

Project Description

One way to improve electrical service reliability to customers who are experiencing problems on a feeder is to island (provide backup power) with energy storage from a battery until normal service is restored. Because the power of a storage system is only a fraction of feeder power capability, each battery can serve only a fraction of the customers on that feeder. However, because the customer load varies significantly from peak to off-peak hours, a sophisticated control scheme can serve the maximum number of customers for a given load and battery's state of charge.

This scheme for minimizing interruption of customer power is known as *Dynamic Islanding*. In order to increase economic benefits, the energy storage system must also be able to perform peak shaving (transformer load leveling) and deferral of upgrade capital. A method for achieving this is to incorporate into the energy storage system both peak shaving and *Dynamic Islanding*, utilizing the family of IntelliTeam switches and reclosers that are used on utility feeders. AEP is engaged in planning, designing, and implementing the installation of 2MW NaS battery storage systems with a control scheme that provides the optimum use of a battery's stored energy to serve the maximum number of customers for a given load and battery state of charge.

The three sites (See *Project Status*, below) are all 2MW, 14.4 MWh, and are located at Bluffton, Ohio; Churubusco, Indiana; and Milton, West Virginia. Installation at the three sites was completed in FY09. After installation, the performance at each site will be monitored until June 2010. The results will be published in a SAND report.

Key Project Events

- All systems are now operational and ready to provide islanding capability.

Project Status

Design changes were made at all three sites to ensure proper coordination of the islanding scheme under different fault conditions. All systems are ready for islanding.

WEST VIRGINIA Site (Balls Gap Station)

After the islanding opportunity event of September 8th, 2009 a review was conducted by AEP and S&C Electric Company to avoid further missed opportunities. The results of the review caused islanding scheme design changes at all three sites to ensure the formation of islands for all fault conditions including ground faults. The changes at the West Virignia site included adding recloser R3 to the scheme [diagram below]. R3 is set to operate very quickly to isolate back-fed current during ground faults. After a preset time, R3 will close in time for the formation of the island. This will solve the problem which occurred during the previous islanding opportunity where back-fed current disabled the island from forming in the appropriate manner.

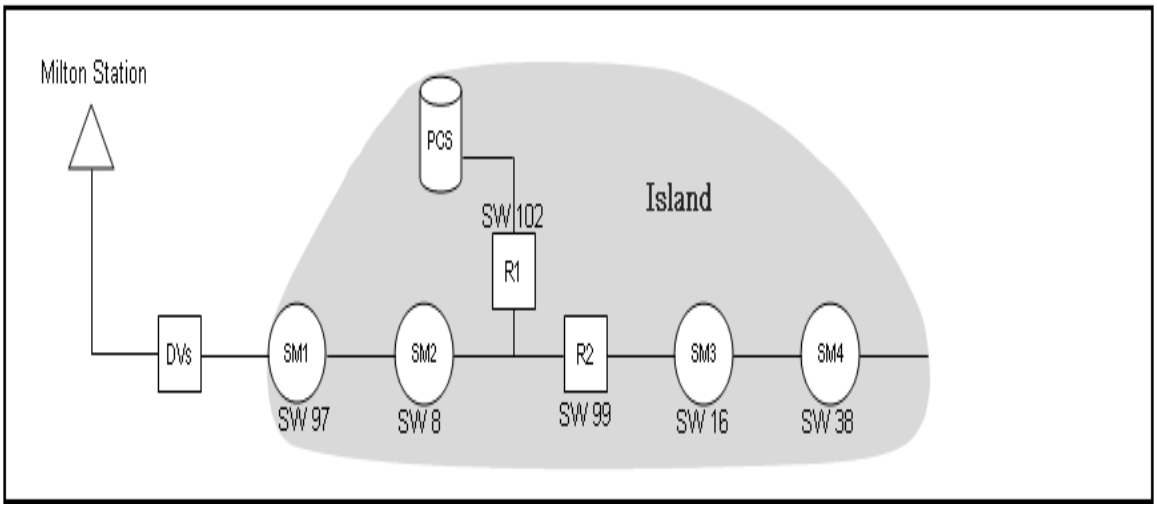

Figure 1: Old islanding scheme diagram at Balls Gap Station.

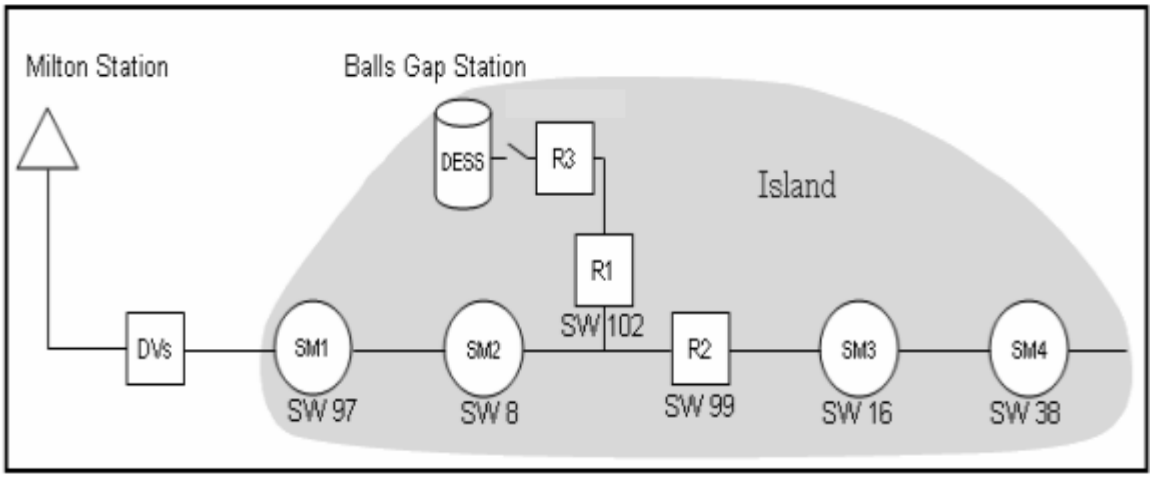

Figure 2: New islanding scheme diagram at Balls Gap Station.

ISLANDING OPPORTUNITIES IN DECEMBER 2009.

Beginning the night of December 18th, a major snowstorm affected the circuit where the Balls Gap Station battery is located. There were two specific opportunities for the battery to come online and feed a portion of the grid.

During the first event; two faults occurred, one between switches SM3 and SM4; and, later, a permanent fault between the DV reclosers and switch SM1. The second fault caused switch SM1 to open and the islanding sequence to begin. The first zone of the island between the battery and R1 were energized by the battery. This load was energized for two days, the entire duration of the event until the utility source was restored. The battery was drained from 100% state-of-charge (S.O.C.) to 40% S.O.C. There were 25 homes in this first zone.

A second islanding opportunity occurred on the 25th of December, when another fault occurred between the DV reclosers and switch SM1. Some of the devices in the island opened while others did not open according to the islanding scheme and no customers were energized.

Investigation is ongoing by AEP and S&C engineers on the reasons for the size of the island during the first event and the non-formation of an island during the second event.

OHIO Site (Citizens Station)

The battery and all islanding equipment have been installed. There has not been a need to use the battery for islanding. However, based on lessons learned from the West Virginia islanding opportunity, some design changes were made to this scheme to ensure that it islands even during line-to-ground faults on the source side of the recloser. The changes entailed setting changes on one of the reclosers to incorporate non-tripping on reverse currents. The system is ready for islanding.

INDIANA Site (East Busco Station)

The battery and all islanding equipment have been completely installed. There has not been a need to operate the battery for islanding. The design changes on the East Busco Station islanding scheme were limited to settings changes in the intelligent switches. The system is ready for islanding.

BALLS GAP STATION BATTERY UTILIZED DURING LOAD TRANSFER

On Tuesday **,** October 20, 2009, the battery was used to alleviate voltage and loading concerns during load transfers that resulted from maintenance at Milton Station. Transformer #2 at Milton was taken out of service for maintenance. The distribution load from Milton was transferred to another station, Hash Ridge. The resulting transfer caused loading and voltage concerns. The Balls Gap NaS battery was placed into service by SCADA and, thus, reduced the load being supported by Hash Ridge station and provided voltage support at the end of the Milton-Balls Gap 34kV circuit. The battery added 2MW of power from 8:00 AM to 10:00AM, which was the peak load period for that day and the power requirement was reduced to 1.25MW from 10:00AM to 4:00PM, before being restored to its normal configuration.

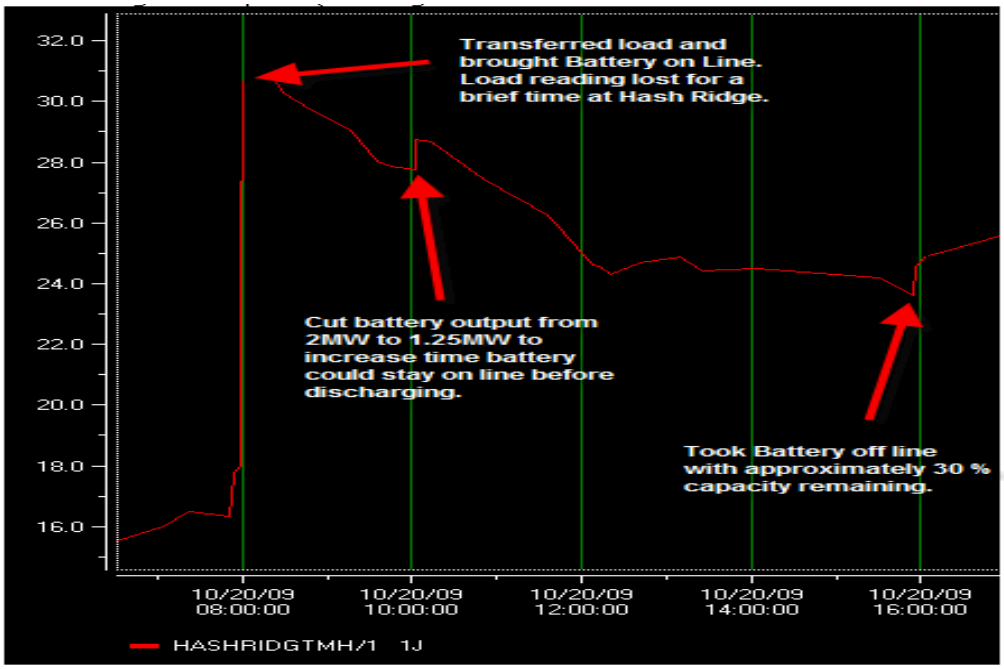

Figure 3: Load (MW) at Hash Ridge Station.

[Return to TOC]

Superconducting Flywheel Development

Date Project Began:

Date of This Project Report: Oct - Dec 2009*

Sandia Project Manager: Nancy Clark

Contractor: Boeing

(*Due to lack of funding, work had been temporarily suspended on this project for most of 2009)

Project Description: This project continues an ongoing design and development effort between the ESS Program and Boeing to mature a new class of flywheel systems with multi-hour storage capabilities. The overall goal of this project is to produce a 3- to 5-kWh flywheel ESS for use in a hybrid wind/diesel generation application. This research offers the potential for significant benefits for future large flywheel systems in terms of system efficiency, as well as capital and operating costs.

Key Project Events:

- Prior to FY07 - Design, assembly & testing of three key components: the rim/hub ass'y, stability magnet ass'y (SMA), and the high-temp. superconducting (HTS) bearing.
- By end of FY07 - Work completed on the 5-kWh rotor and successful testing of HTS bearing to approx. 15,000 rpm. Additional capability to HTS bearing for passive damping of sub synchronous vibration anticipated due to previous experience with the DOE SuperConducting Flywheel Program.
- In FY09 – Study of permanent magnet arrays for hall sensor on motor/generator encoder was conducted.
- In FY09 – New motor/generator encoder design tested.
- Two US patents were issued on Dec 15, 2009
  - 7, 633,202 B2 "Damping in high-temperature superconducting levitation systems"
  - 7,633,203 B2 "Damping and support in high-temperature superconducting levitation systems"

Project Status

A study of permanent magnet arrays for hall sensor on motor/generator encoder has been conducted to ensure the permanent magnets were sufficient to provide proper signal for the motor controller. Twelve cylindrical magnets – 0.125-inch Dia, 0.375-inch Height, were equally spaced on a 1.2 inch diameter circle. Magnets were transversely magnetized in the radial direction in opposite polarity (Figure1).

Because the Boeing flywheel is of higher storage efficiency than the usual type, it requires brushless and gearless motor drive and control. Therefore, a new motor/generator encoder was designed and tested to ensure the encoder will provide sufficient feedback to the motor controller up to an operating speed of 24,000 RPM, which is necessary for the Boeing flywheel storage unit (Off-the-shelf systems exceeding speeds of 16,000 rpm are not available). Subsequently, the unit will be interfaced to the off-the-shelf motor controller and operated with a simulated load to perform test, operation and validation checks. Signals collected of frequency rise and fall times

are presented in Figure 2. Through extrapolation of the trend-line, the indications are the combined time will be less than 10 μ-seconds. This facilitates the operation of the incremental ring to 100 kHz.

Thermal modeling of a 3 kW motor/generator stator (adapted from the previous DOE flywheel contract to reduce cost to this project) has been conducted to ensure the stator will work sufficiently in the current flywheel design.

.

Project Pictures / Graphs / Tables:

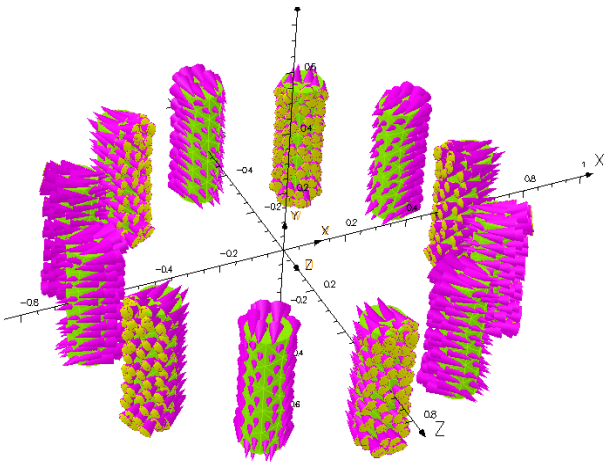

Figure 1. Magnets are transversely magnetized in the radial direction in opposite polarity.

Pulse Width of Sychronizing Signal @ 60 Hz "TTL" (ms)	Frequency Channel 1 (Hz) Index Ring	Rotational Speed of Encoder Disk (rpm)	Frequency Channel 2 (Hz) Speed Ring coincident with Index	Ratio Channel 1 & Channel 2 "estimates number of speed ring slots"	Rise Time Channel 2 (us)	Fall Time Channel 2 (us)	Sum of Rise and Fall Times (us)
1.3639	20.6	1236	4.8E+3	231.6	23	21	44
1.3706	29.9	1794	7.8E+3	259.2	16.4	15.8	32.2
1.3786	40.1	2406	9.3E+3	230.7	12.8	11.9	24.7
1.3892	50.05	3003	13.0E+3	258.7	10.8	10.5	21.3
1.4015	60.1	3606	15.5E+3	257.9	9.7	9.3	19
1.415	69.99	4199	17.1E+3	244.3	8.5	7.8	16.3
1.431	80.03	4802	19.5E+3	243.7	7.9	7.4	15.3
1.4467	90.1	5406	20.6E+3	228.6	7.8	7.1	14.9
1.4628	100.1	6006	24.4E+3	243.8	7	6.6	13.6
1.4806	104.2	6252	25.4E+3	243.8	6.9	6.5	13.4

R-C Motor Stalled in Air

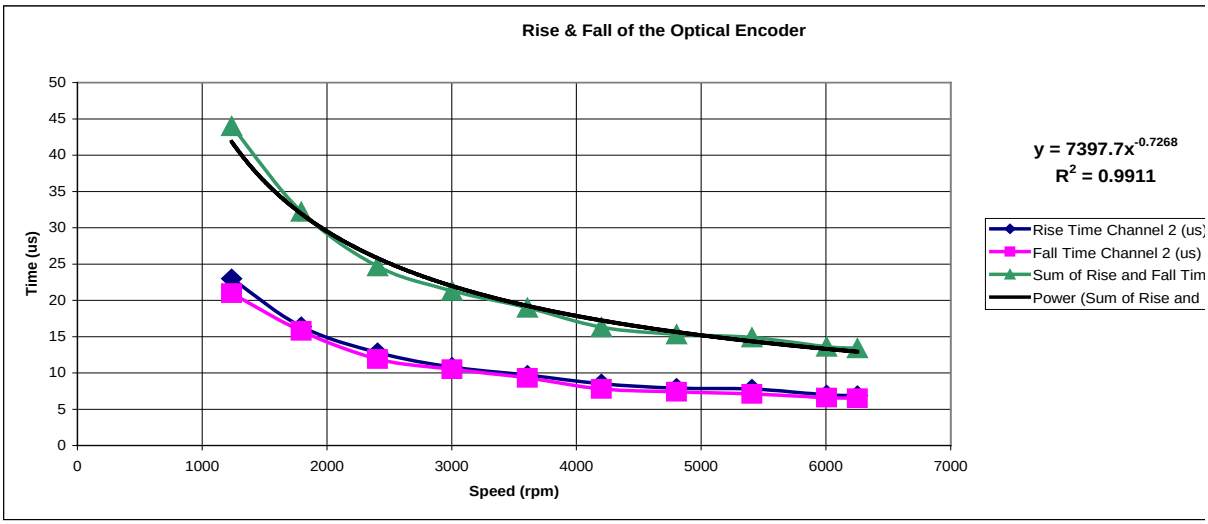

Notes: The stated speed of the Optical Transistor is 4 us (typ.). In order to achieve 100 kHz operation with an encoder disk of aproximately 256 Slots, on the outside Speed Ring we must not exceed a combined time of aproximately 10 us. This allows for the combine rise and fall times and 1 us time each for the 'High & Low' times.

Extrapolations based upon Trendline: y = 7397.7x^(-0.7268)

Speed (rpm)	Speed Ring (Hz)	Combined Times (us)	
2406	*40.1*	*25.8*	Extrapolation check point
3003	*50.05*	*22.0*	Extrapolation check point
3606	*60.1*	*19.2*	Extrapolation check point
4199	*69.99*	*17.2*	Extrapolation check point
6006	*100.1*	*13.3*	Extrapolation check point
12000	200	*8.0*	
18000	300	*6.0*	
24000	400	*4.8*	

Figure 2. Signals collected of Frequency, rise and fall times.

[Return to TOC]

Carbon-Enhanced Lead-Acid Battery and EC Testing

Date Project Began:	**December 2005**
Date of This Project Report:	**Oct - Dec 2009**
Sandia Project Manager:	**Tom Hund**
Contractor:	**(SNL In-house Project)**

Project Description

In a cooperative effort with Mead-Westvaco, NorthStar Battery, and Battery Energy, the ESS Program was working to enhance the high-power cycle performance of valve-regulated, lead-acid (VRLA) batteries for utility cycling applications. The goal of this work was to evaluate the effect of different carbon formulations when used in the negative electrode of the battery. The carbon additions can significantly improve battery performance in high-power, partial-SOC cycling and prevent hard sulfation in the negative electrode, which can lead to capacity loss and premature battery failure. NorthStar Battery, Battery Energy, CSIRO/Furukawa, and East Penn Battery have produced a number of VRLA batteries containing carbon additives. All of the above batteries were or are under test at SNL. The goal of the current testing on the second series of carbon-enhanced VRLA batteries is to identify a carbon formulation and/or manufacturer that can build a battery that will maintain a low gassing current, while providing the high-power, intermediate-SOC cycle performance with a long cycle-life, in utility applications.

Key Project Events

- MeadWestvaco and NorthStar Battery team to evaluate carbon formulations in the negative electrode of NorthStar VRLA batteries for utility applications. Two series of MeadWestvaco carbon formulations have been evaluated to date. This battery is designed for telecommunications systems.
- MeadWestvaco includes Battery Energy SunGels in their carbon formulation testing. This battery is designed for motive power and remote area power supplies.
- CSIRO/Furukawa provides Sandia with an Ultrabattery for utility cycle testing. This battery is designed for hybrid electric vehicles (HEVs).
- Sandia purchases an East Penn carbon enhances large format VRLA battery for testing. This battery is designed for utility cycling and wind farm power smoothing.
- The CSIRO/Furukawa Ultrabattery test results are published at the **18th International Seminar on Double Layer Capacitors and Hybrid Energy Storage Devices 12/08.** The results show a high rate partial state of charge cycle performance increase of at least 13 to 1 over conventional VRLA batteries.
- Sandia has purchased 24 1,000 Ah Ultrabattery cells in January of 2009 from Furukawa Battery for high-rate-partial-state-of-charge testing and for photovoltaic energy storage applications.
- The East Penn ALABC carbon enhanced wind farm energy smoothing battery test report was presented and published at the **EESAT 2009** conference. This was the first large format (1,000 Ah Cell) battery manufactured using the ALABC carbon technology.
- The East Penn version of the Ultrabattery was purchased in October 2009 and with the Furukawa version of the Ultrabattery photovoltaic hybrid power system testing is underway. This is the first large format Ultrabattery (1,000 Ah Cell) testing for solar and utility applications.

Project Status

Testing for FY10 Qt.1 is currently focusing on the new large format East Penn and Furukawa Ultrabattery. This is a valve regulated lead-acid battery with a carbon supercapacitor in parallel with the lead-acid cell. Initial test results using a PV hybrid power system test procedure is showing very positive test results with the capacity increasing from 1,069 to 1,079 Ah, a slight increase. This compares with a conventional VRLA battery where capacity dropped 17% after the first 20 PV hybrid cycles. Preliminary test results look very encouraging.

Project Pictures / Graphs / Tables

Furukawa 1,000 Ah Ultrabattery

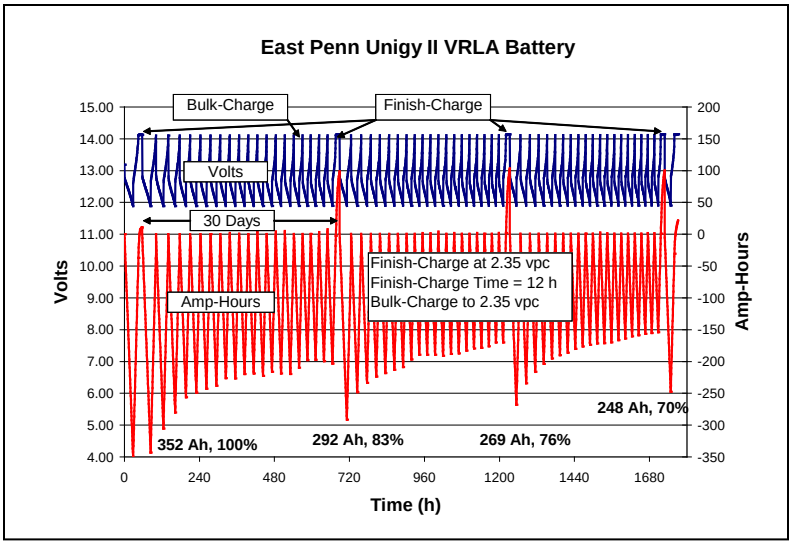

East Penn 1,000 Ah Ultrabattery

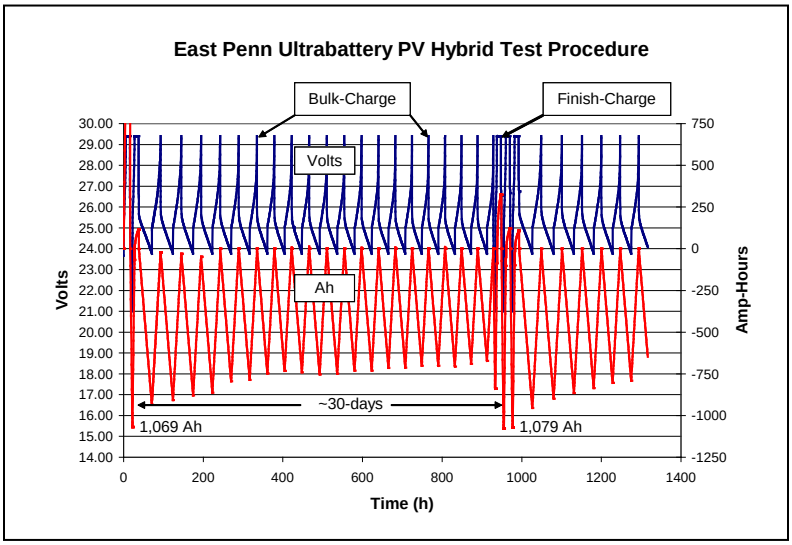

[Return to TOC]