USCi
United Silicon Carbide, inc.

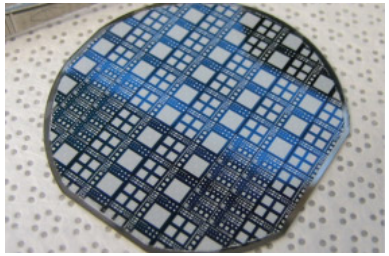

6.5 KV SILICON CARBIDE HALF-BRIDGE POWER SWITCH MODULE FOR ENERGY STORAGE SYSTEM APPLICATIONS

Dr. John L. Hostetler

United Silicon Carbide, Inc.

09/27/12

U.S. DEPARTMENT OF ENERGY

Sandia National Laboratories

Acknowledgments

United Silicon Carbide would like to thank Dr. Imre Gyuk of the DOE Energy Storage Program for funding of this project and Dr. Stan Atcitty of SNL for his technical contributions

SBIR DE-FOA-0000628

- *DOE Topic Number 8:* ***High Voltage DC-Link Power Conversion System for Energy Storage Applications***
- *Subsection b.* ***Advanced Semiconductor Switches Modules for High Voltage Energy Storage Systems***
- PI: Dr. John L. Hostetler

USCi colleagues: *Dr. Larry Li, Dr. Leonid Fursin, Dr. Petre Alexandrov, Mike Lange, Matt Fox, Guy Moxey, Mari-Anne Gagliardi & Dr. Chris Dries*

USCi Partner:

Sandia National Laboratories is a multi-program laboratory managed and operated by Sandia Corporation, a wholly owned subsidiary of Lockheed Martin Corporation, for the U.S. Department of Energy's National Nuclear Security Administration under contract DE-AC04-94AL85000.

Contents

- Storage Applications
  - Role of Power Conversion
- Project Goals & Timeline
- Overall Project Objective
  - Impact
- Design Approach
  - Reliability Focused
- Device & Half-Bridge Simulations
- Next Steps
- Conclusions

Storage Applications

- Every storage technique involves Power Conversion where the most common interface is a DC-Link.

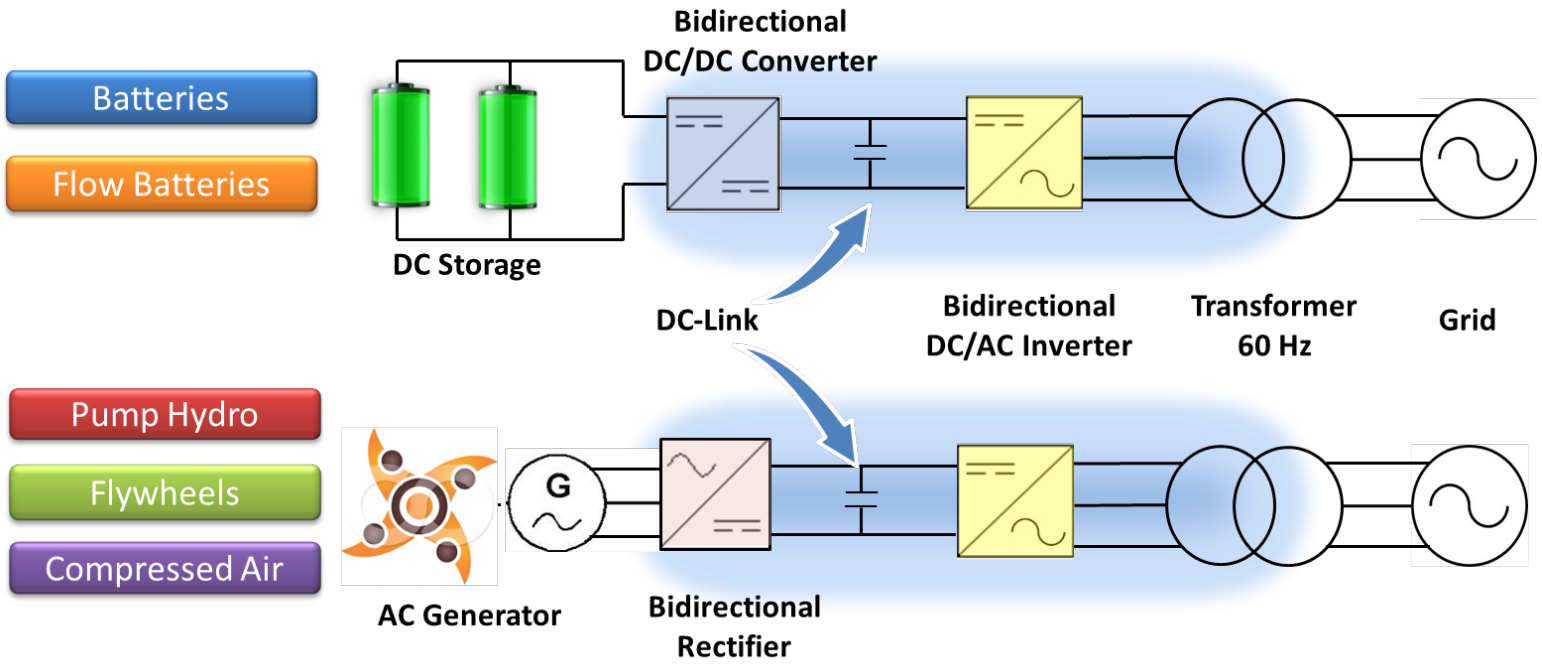

The Present Cost of Power Conversion Stages is ~30% or Higher of Total System Cost!

Project Goals & Timeline

- USCi proposes a 6.5 kV Switch Module that can enable a DC-Link Voltage up to 5 kV using SiC wide bandgap devices:
  - Junction Field Effect Transistors (JFETs) and Junction Barrier Schottky Diodes (JBS's)

- Presently, DC-Links reside at ~900 to 1100 V
  - Limited by the switch voltage ratings ~ 1200 V Si-IGBTs

- USCi has partnered with Princeton Power Systems to gain critical insight into the impact of a medium voltage switch on inverter systems

- **Phase I** – Design of SiC Power Module and Epitaxial Growth (9 months)
- **Phase II** – Fabrication of Power Module and Demonstration of 5 kV DC-link Power Inversion (2 years)

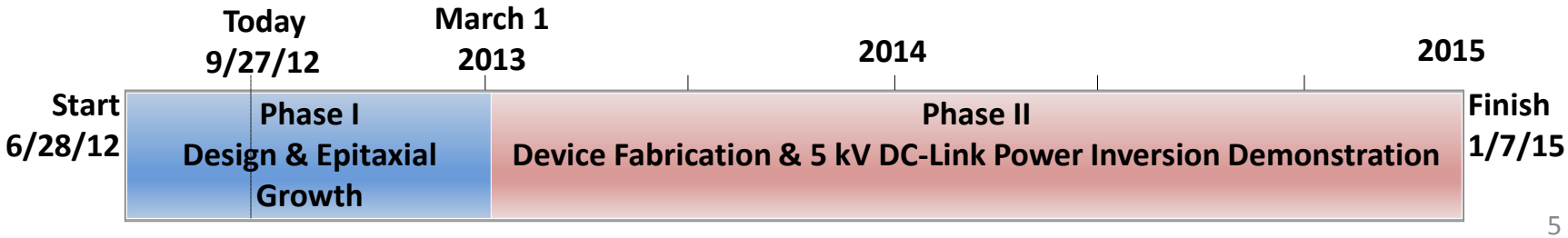

Overall Project Objective

- **How does higher DC-Link voltage help on the Power Conversion System Level?**
  - Higher Voltage Means Lower Current
  - Losses ~ I^2R and Switching- More Efficient, Smaller Systems, Less Cooling
  - High Operating Frequency– Reduces Magnetics Drastically
  - Reduced Footprint, Balance-of-System, and Cost

Next Generation Topologies

Si-IGBTs

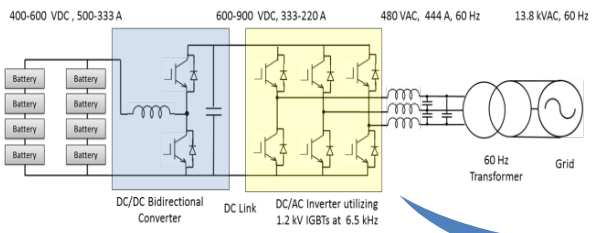

2 level Inverter
900 V DC-Link
I ~ 300 A/switch
***f* < 10 kHz**

6.5 KV SiC-JFETs

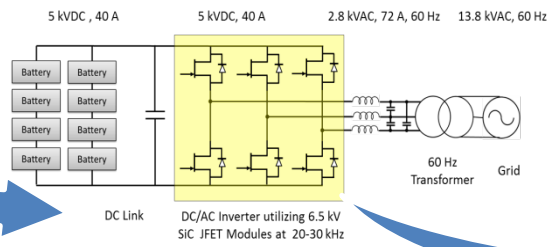

2 level Inverter
5 kV DC-Link
I ~40 A/switch
***f* >20 kHz**

SiC-JFETs

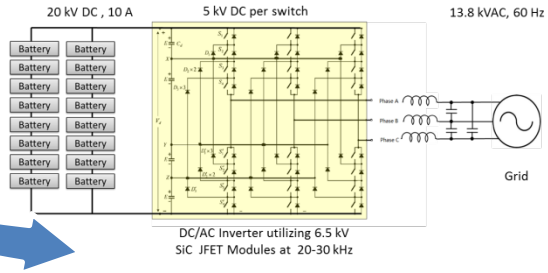

5 level Inverter
20 kV DC-Link
I ~40 A/switch
***f* >20 kHz**

Impact of an all SiC Power Module on Systems

- How does a 6.5 kV SiC Switch Module Impact Storage Systems?
  - Costs and Efficiency of Power Conversion Stages

Parameter	Improvement over Si-IGBTs	Comment
System Efficiency	**1.5-2.0%** ***(~96 to 98%)***	*JFETs & JBSs both contribute to efficiency improvements of module*
Switch Frequency	**2-5 X** ***(<10 kHz to > 20 kHz)***	*Greatly Impacts Magnetics*
Operating Current	**X 10 Reduction** ***(~400 A to 40 A)***	*Greatly Impacts Magnetics & BoS*
Operation Temperature	***1.5 X (150 C to 250 C)***	*Reduces Cooling Complexity*

Why a Normally-off SiC JFET?

Switch type > Property	Norm Off SiC JFET	SiC MOSFET	SiC Bipolar	Si IGBT Stack
kV	>>6.5 kV	>>6.5 kV	>>>6.5 kV	<6.5 kV
Switching speed	>20 kHz	>20 kHz	<20 kHz	<5 kHz
Switching Loss	1X	1X	~5X	~5X
Driver Complexity	Simple	Simple	Complex	Moderate
Operational Tj	>250°C	150°C	>250°C	150°C
Reliability	No MOS Gate - Robust	MOS Gate - Reliability Concern	V drift (BPD) - Reliability Concern	Robust

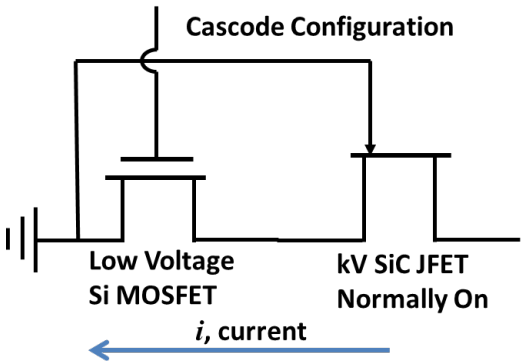

- Cascode Configuration can utilize normally-on SiC JFETS - Very attractive option
- But is limited in operation temperature by the Si MOSFET
- USCi targets high temperature operation to reduce cooling needs –> SiC Normally-off JFET

JFET Design Approach

- **Design Focus on Reliability**
  - Utilize only N-type 4H-SiC Material for all devices in the module
    - Unipolar SiC devices more mature than bipolar - not sensitive to Basal Plane Defects
  - No MOS Gate
    - High Mobility N-channel
  - Modest Current Densities - keep heat generation low (50 A/cm^2)
    - Less Stress on Packaging
  - Existing SiC Schottky Diode Market Proof of N-type SiC Material Reliability

Normally – Off N-type Vertical JFET

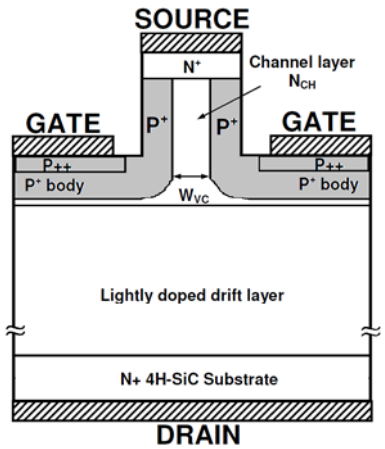

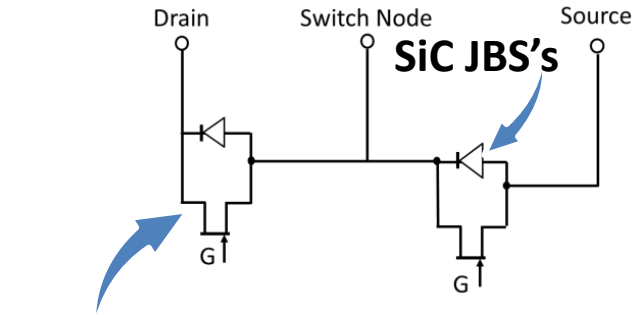

Half-Bridge Module

USCi Schottky Reliability N-type Unipolar Epitaxy

- High Temperature Reverse Bias, T_{case} = 175°C

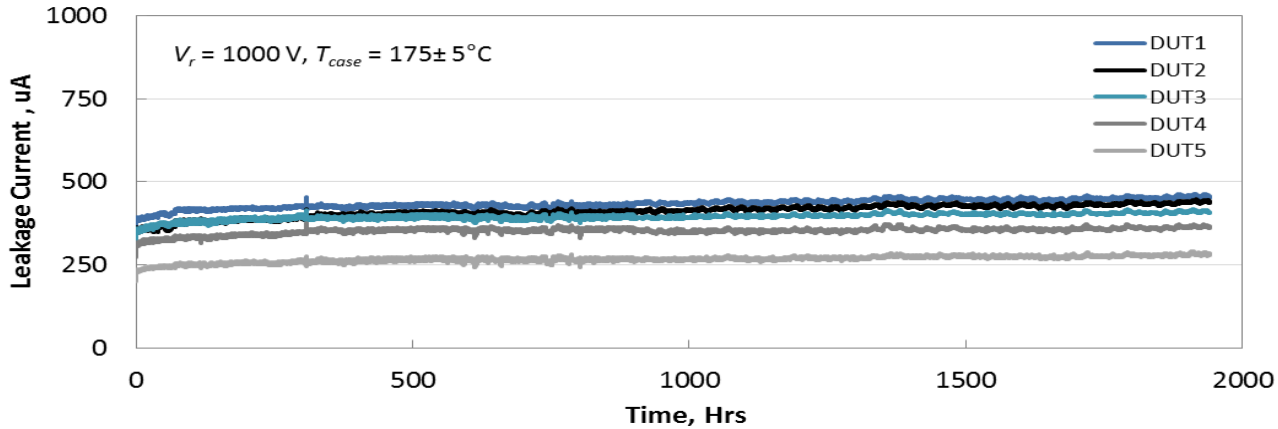

1200 V, 10 A
Junction Barrier
Schottky Diode
TO-220

- Intermittent Operation Lifetime ΔT_j = 100°C

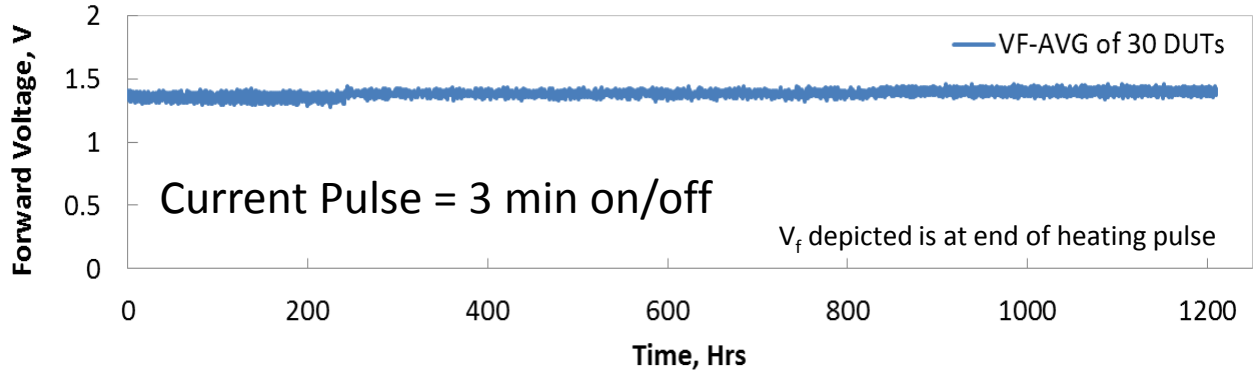

6.5 kV Half-Bridge Expected Performance

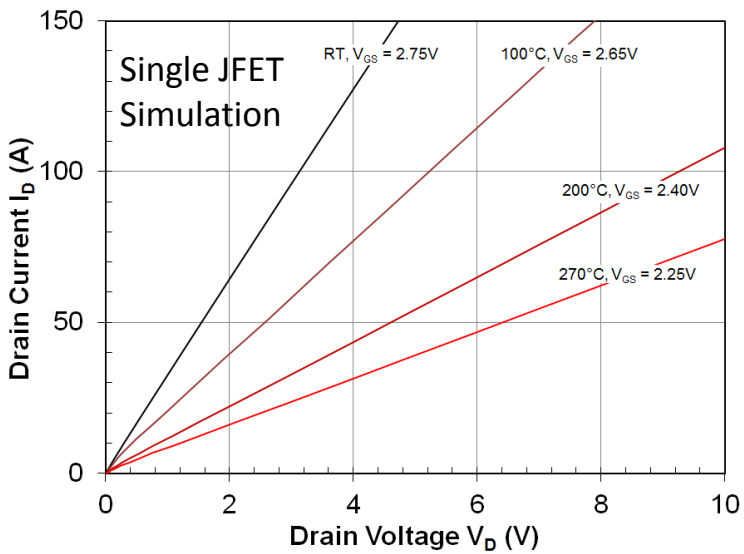

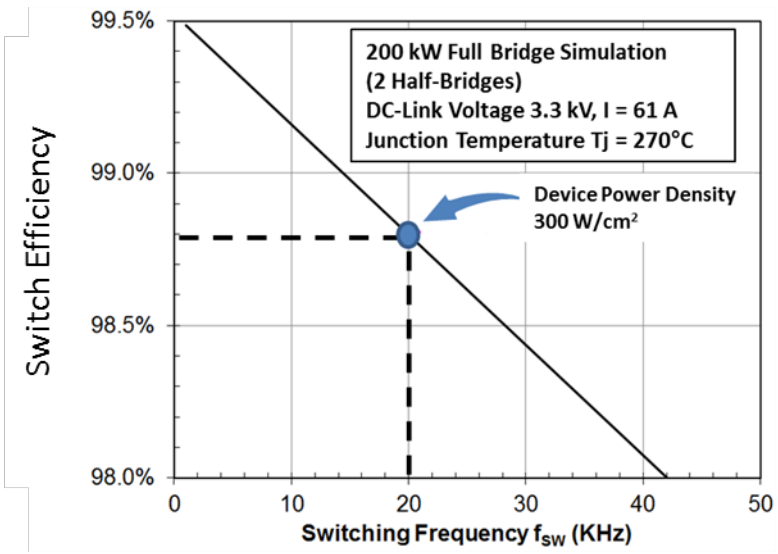

Parameter	Target
Max DC-Link Voltage	~ 5 kV
Max Current	61 A
Target R_{on} (RT)	33 mΩ
Switching Speed	~20 kHz
Max Ambient Temp	~100°C
Max Junction Temp	~270°C

- Full Device Simulation using TCAD Sentaurus
- Device Simulation Complete
- Packaging Simulation in Progress
- Gate Driver Design in Progress

Next Steps

- Phase I Tasks
  - Device Module Simulations
  - Packaging Simulations
  - Gate Driver Design
  - Define Manufacturing Concept
  - **Epitaxial Growth of 6.5 kV JFET and JBS material**

USCi's New SiC Epitaxial Growth Facility

- Future Phase II Tasks
  - Device Fabrication
  - Module Assembly
  - Half-Bridge Module Demonstration with Princeton power Systems
  - **Target:** Alpha prototype by end of phase II (TRL 6)

USCi's Class 100 Pilot Wafer Fab

Conclusions

- **United Silicon Carbide is proposing a tractable approach to developing a 6.5 kV medium voltage half-bridge switch module**
  - Will enable a 5 kV DC-Link voltage which will greatly impact Storage Systems by reducing costs of power conversion stages
  - Impact current system designs as well as create a platform for highly innovative inverter/converter designs

- **Module is based on an all SiC half-bridge module**
  - Utilizes Vertical JFETs and JBS's
  - Focusing on reliability aspects of SiC materials
  - All N-type SiC material system
  - No MOS–Gate material

- **Currently in Phase I**
  - Device Simulations Completed
  - Current Efforts focused on Epitaxial Growth of 6.5 kV material

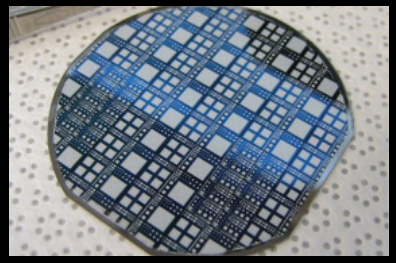

Thank You!

USCi Welcomes Your Questions

PI: Dr. John L. Hostetler
Director of Epitaxial Growth
United Silicon Carbide
jhostetler@unitedsic.com
732-355-0550