Third Generation Flywheels

DOE Inventions and Innovations
CFDA 81.036

Jim Fiske
(805) 683-9659 ext.239
jfiske@launchpnt.com
October 20, 2005

ACKNOWLEDGMENTS

- Funded in part by the Energy Storage Systems Program of the U.S. Department Of Energy (DOE/ESS) through Sandia National Laboratories (SNL).

Project Objective

- Stable levitation of a small scale 3rd Generation Flywheel (Power Ring) at the highest rpm safely attainable with limited facilities.
  - Analyze and model rotor dynamics.
  - Design a sub scale Power Ring using a carbon fiber rim.
  - Fabricate, assemble and instrument the Power Ring.
  - Execute a series of tests, gradually increasing performance to the maximum speed consistent with safety.

Flywheel Generations

- 1st Generation:
  - Bulk materials (stone, iron, steel)
  - Low power density
  - Scalable to large dimensions/high capacity
- 2nd Generation:
  - Composite materials (carbon epoxy)
  - High power density
  - Limited to small dimensions/low capacity
- 3rd Generation:
  - Composite materials
  - High power density
  - Scalable to large dimensions/high capacity

Project Motivation: 1st Problem

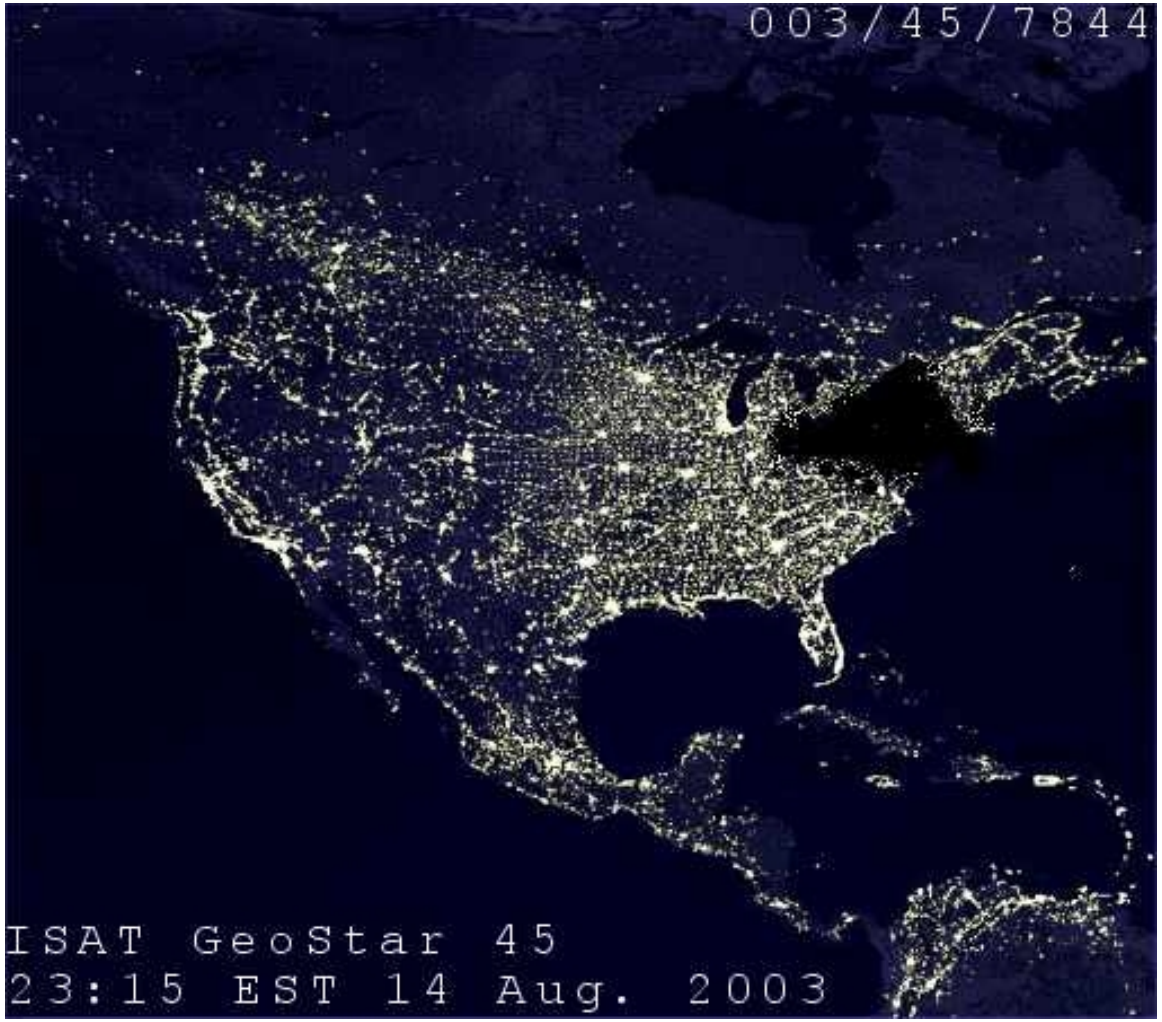

Electric Power is:

- **Not reliable enough**
- **Poor quality**
- **Expensive**
- **Polluting**
- **Cause of > $100B/yr in US Economic Losses**

<u>Electricity Storage could greatly alleviate all of these problems</u>

Project Motivation: 2nd Problem

Existing electricity storage technologies are not sufficiently cost effective for high power, short duration applications.

- **Frequency Regulation**
- **Large Facility Power Quality**
- **Grid Power Quality**

Other Applications:

- **Hybrid Locomotives, Renewable Energy, Spinning Reserve, Energy Management, Facility Deferral**....

Project Motivation: 3rd Problem

Industry R&D Spending

Industry	Sales	R&D	% of Sales
Software	$63 B	$13 B	20.3%
Computer & Electronics	$510 B	$41 B	8.0%
Chemicals	$362 B	$21 B	5.8%
Machinery	$176 B	$7 B	3.8%
Construction	$12 B	$22 M	.18%
Utilities	$233 B	$136 M	.06%

National Science Foundation 2003

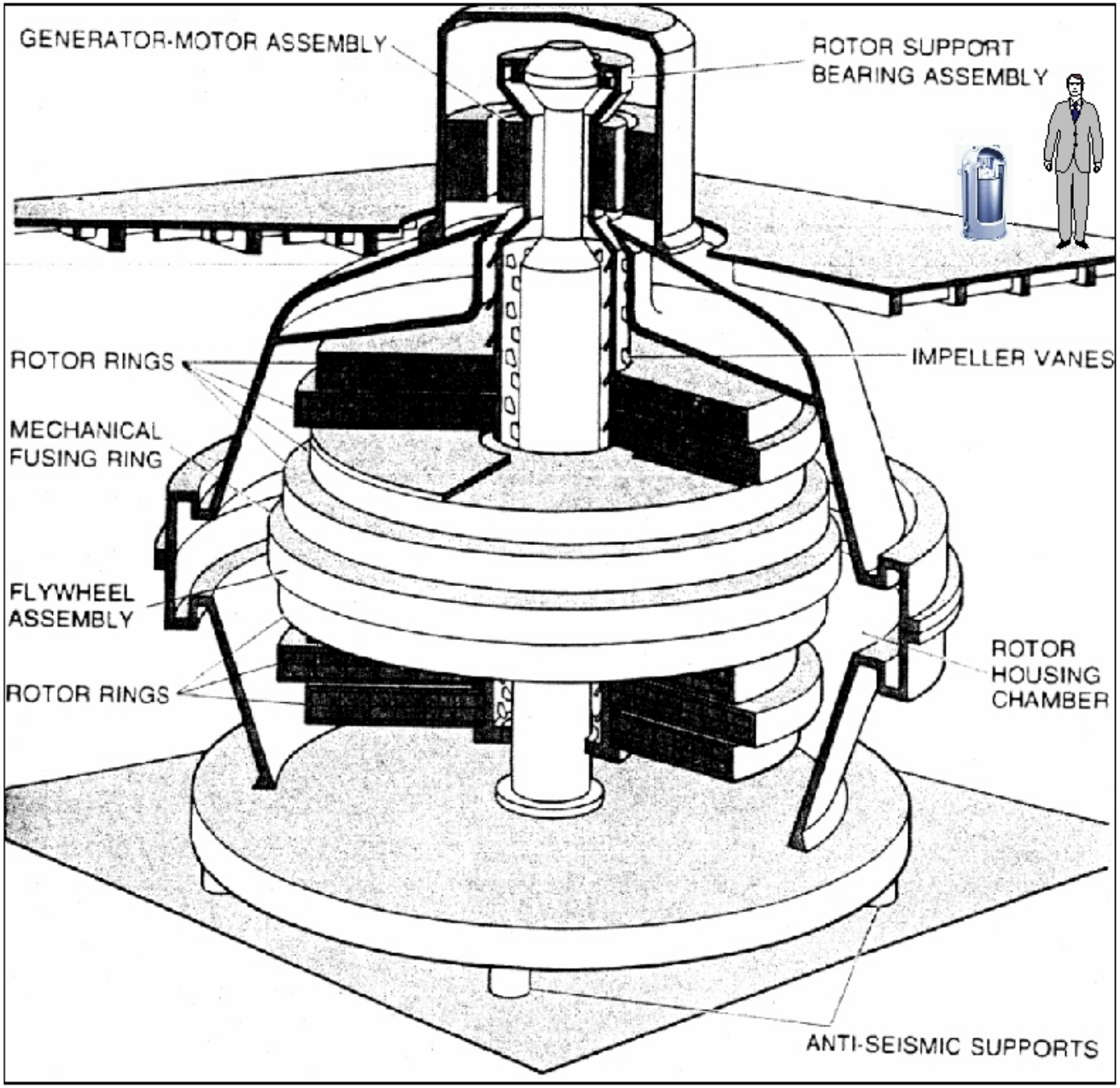

Post's 1973 200-ton Flywheel Proposal

The 2nd Gen Flywheel Dilemma

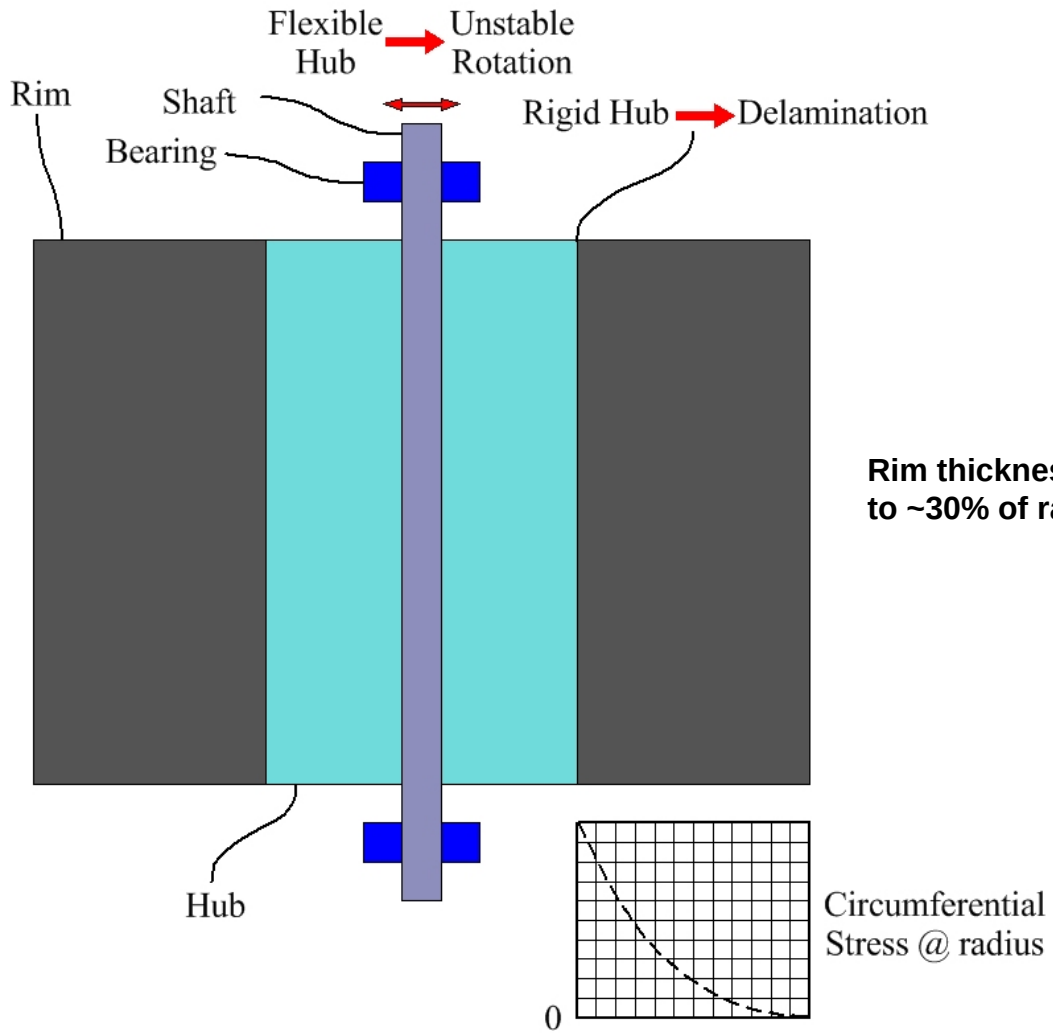

Rim thickness limited to ~30% of radius

New Magnetic Bearing Technology: The Halbach Array

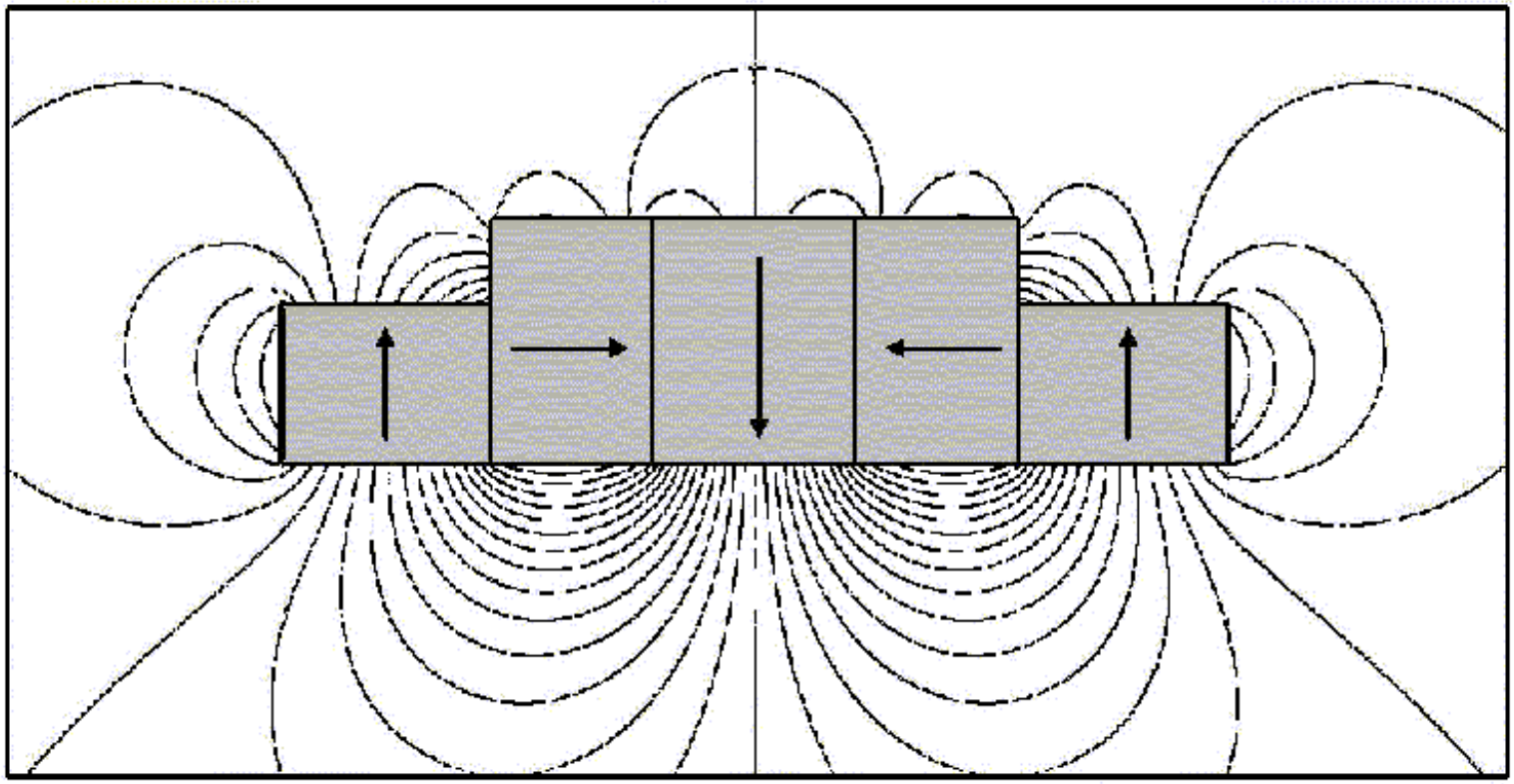

Maglev Vehicle Bearing

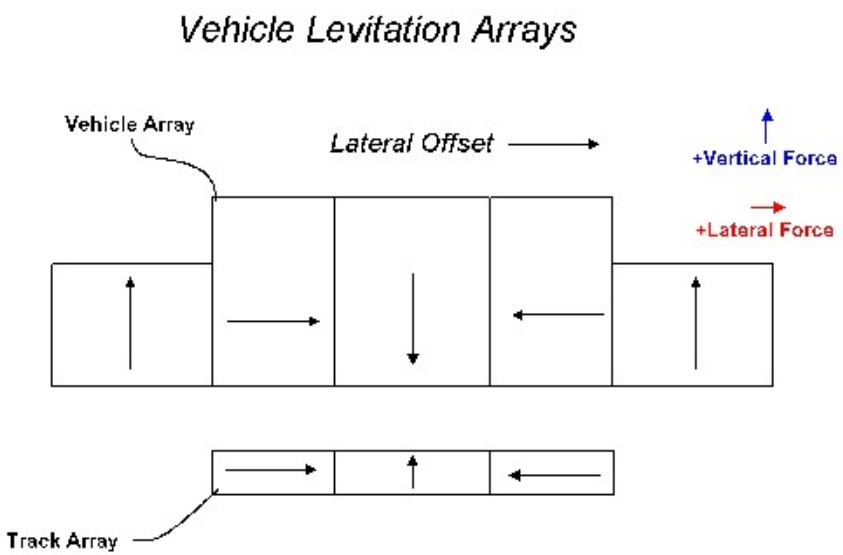

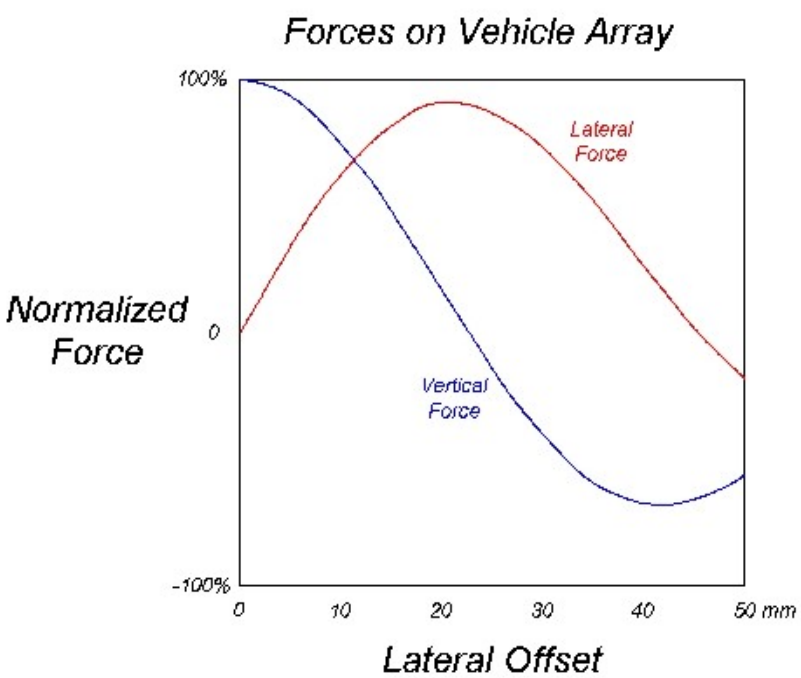

Shear-Force Levitator

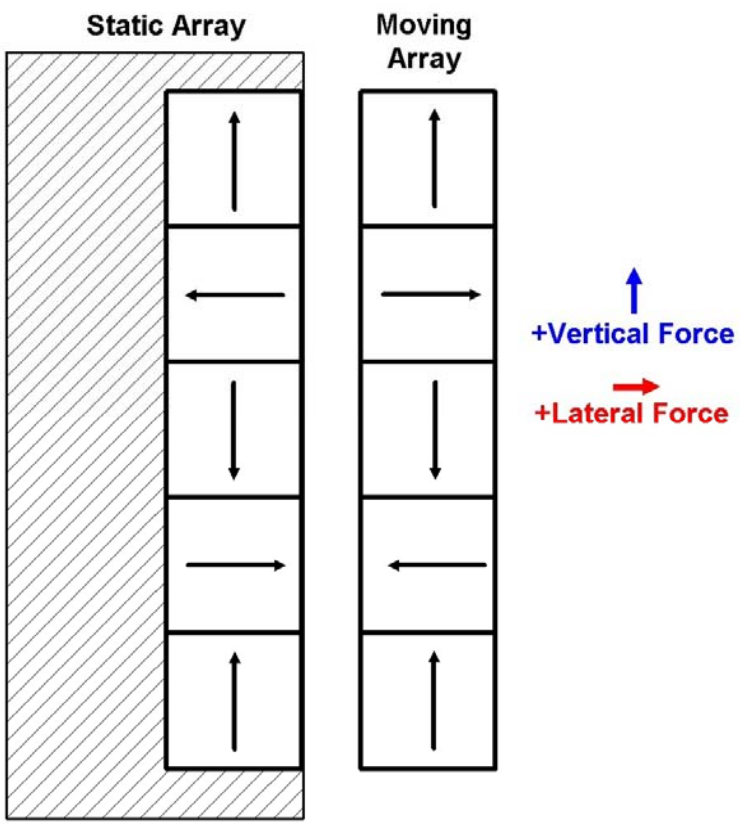

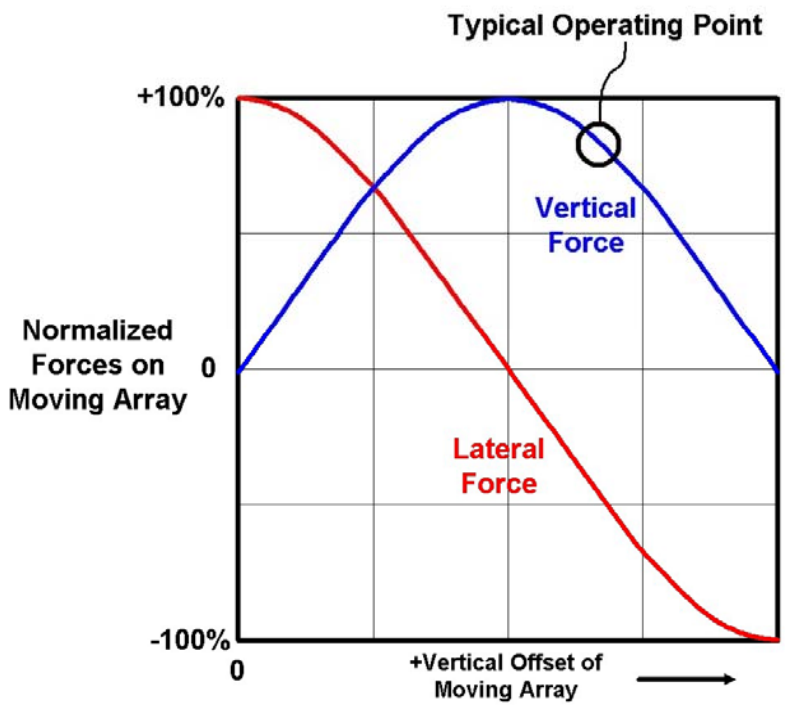

Stabilization Actuator Operation

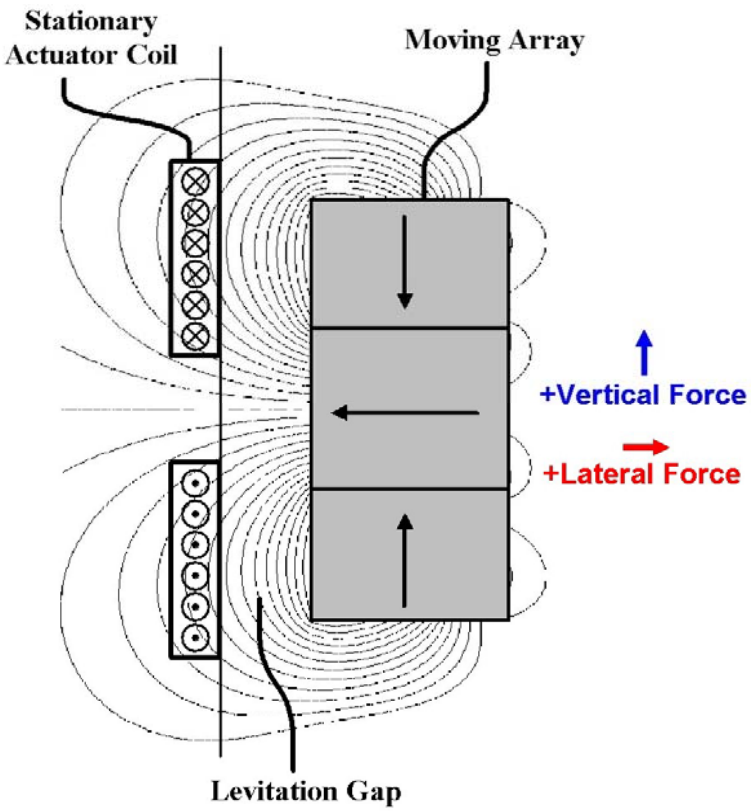

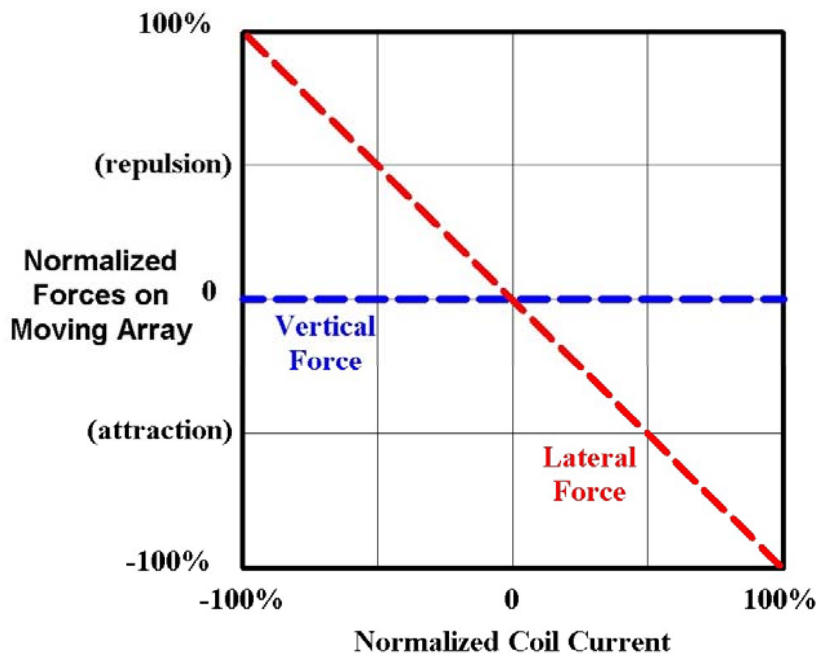

Power Ring Cross Section

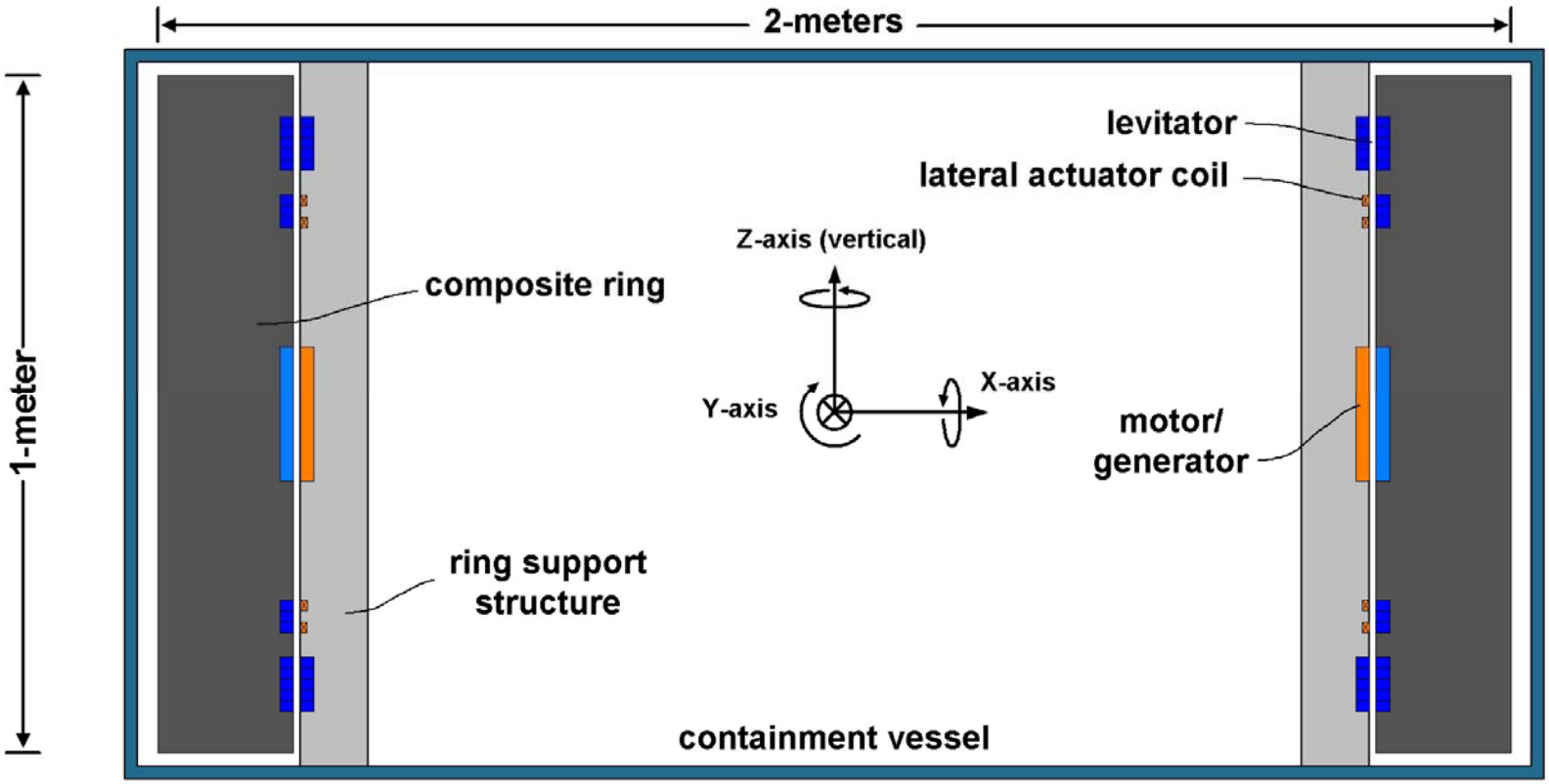

Power Ring Top View

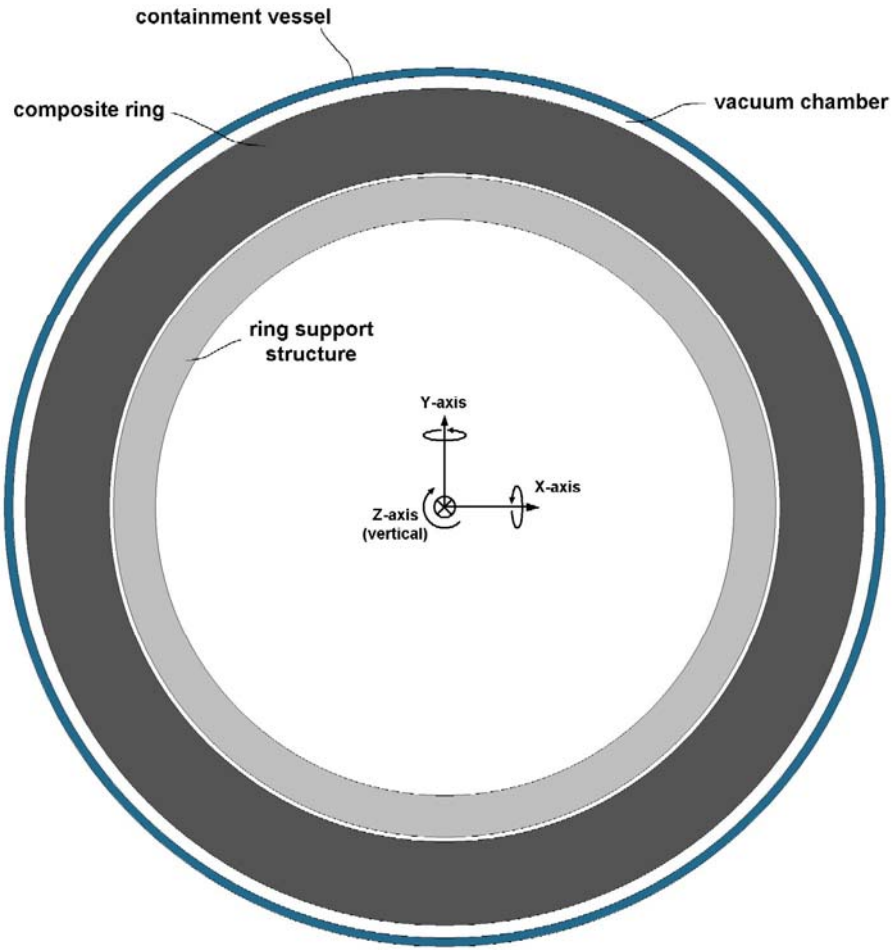

- **High energy density**
- **Scalable to > 5MWh**
- **Extremely high power**

100 MW Power Ring Design (Navy)

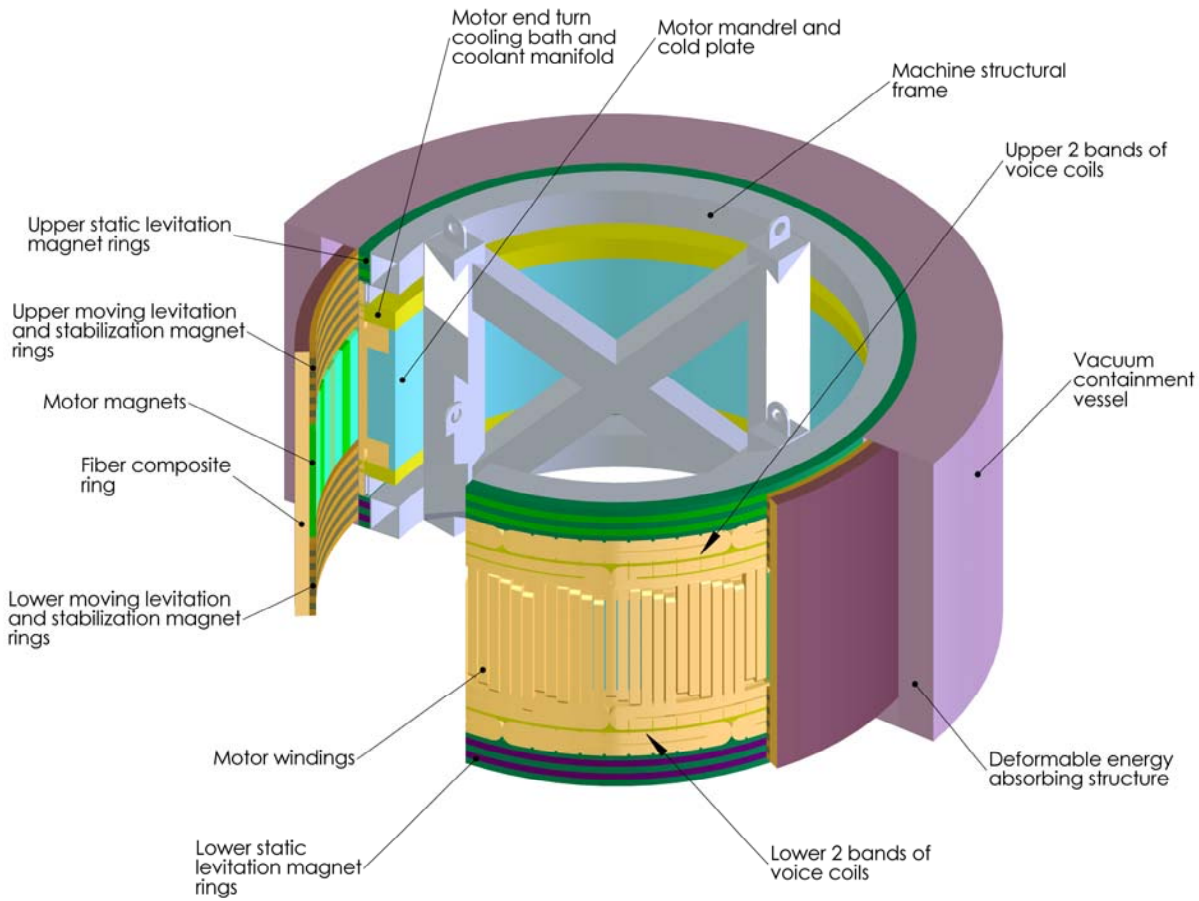

Unit dimensions	2.5m dia., 1.4m high
Total unit mass	3600 kg
Total spinning mass	1668 kg
Tip speed	533 m/s
Max rotation rate	4576 RPM (76 Hz)
Power (full charge)	153 MW RMS
Power (full discharge)	100 MW RMS
Usable stored energy	90 MJ (25 kWh)

200 kWh Utility Power Ring (NYSERDA)

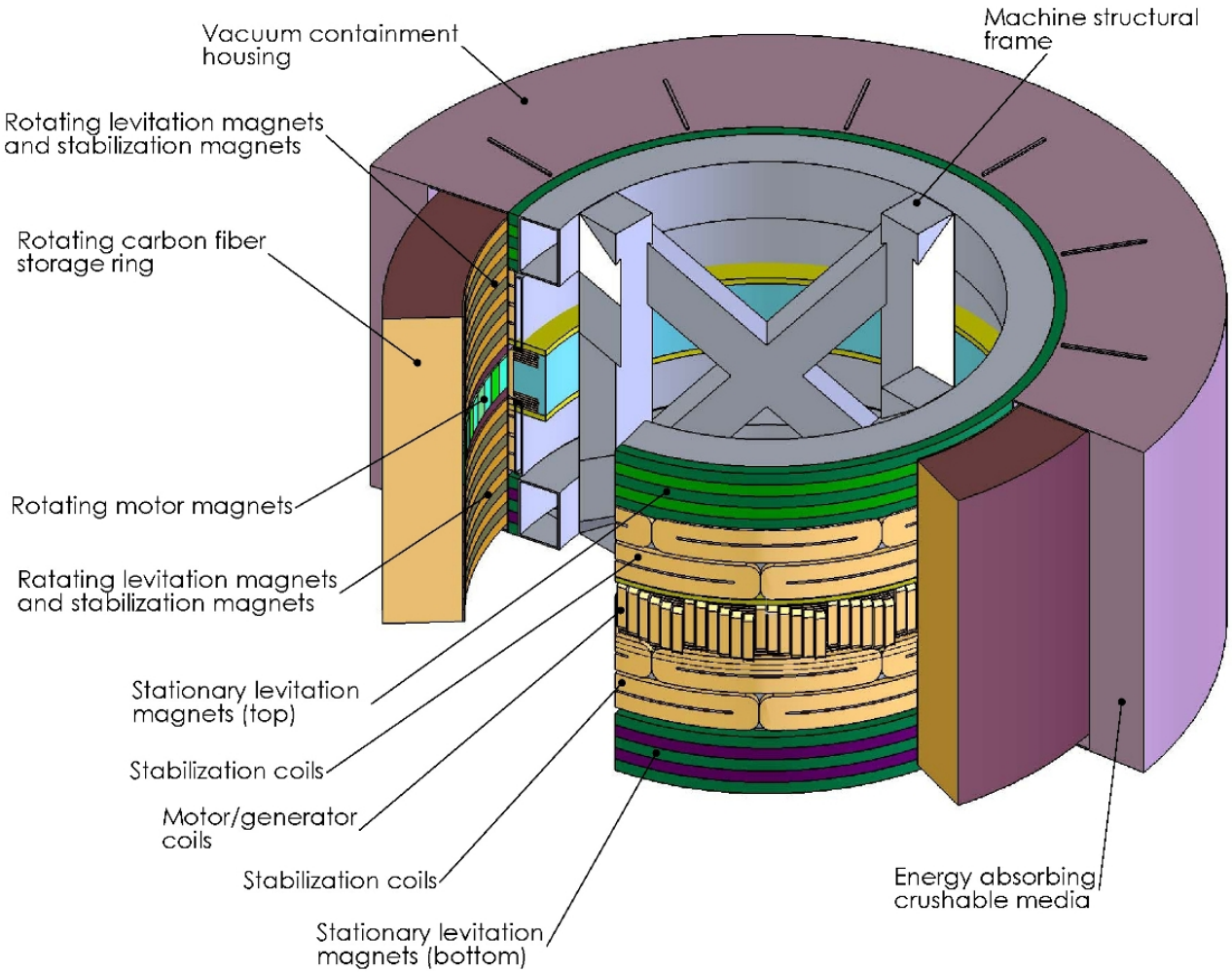

Unit dimensions	2.6m dia., 1.25m high
Total unit mass	5594 kg
Spinning mass	2792 kg
Tip speed	822 m/s
Max rotation rate	7000 RPM (116 Hz)
Power (full discharge)	100 kW RMS
Usable stored energy	720 MJ (200 kWh)

Cost Projection – 20-sec Discharge

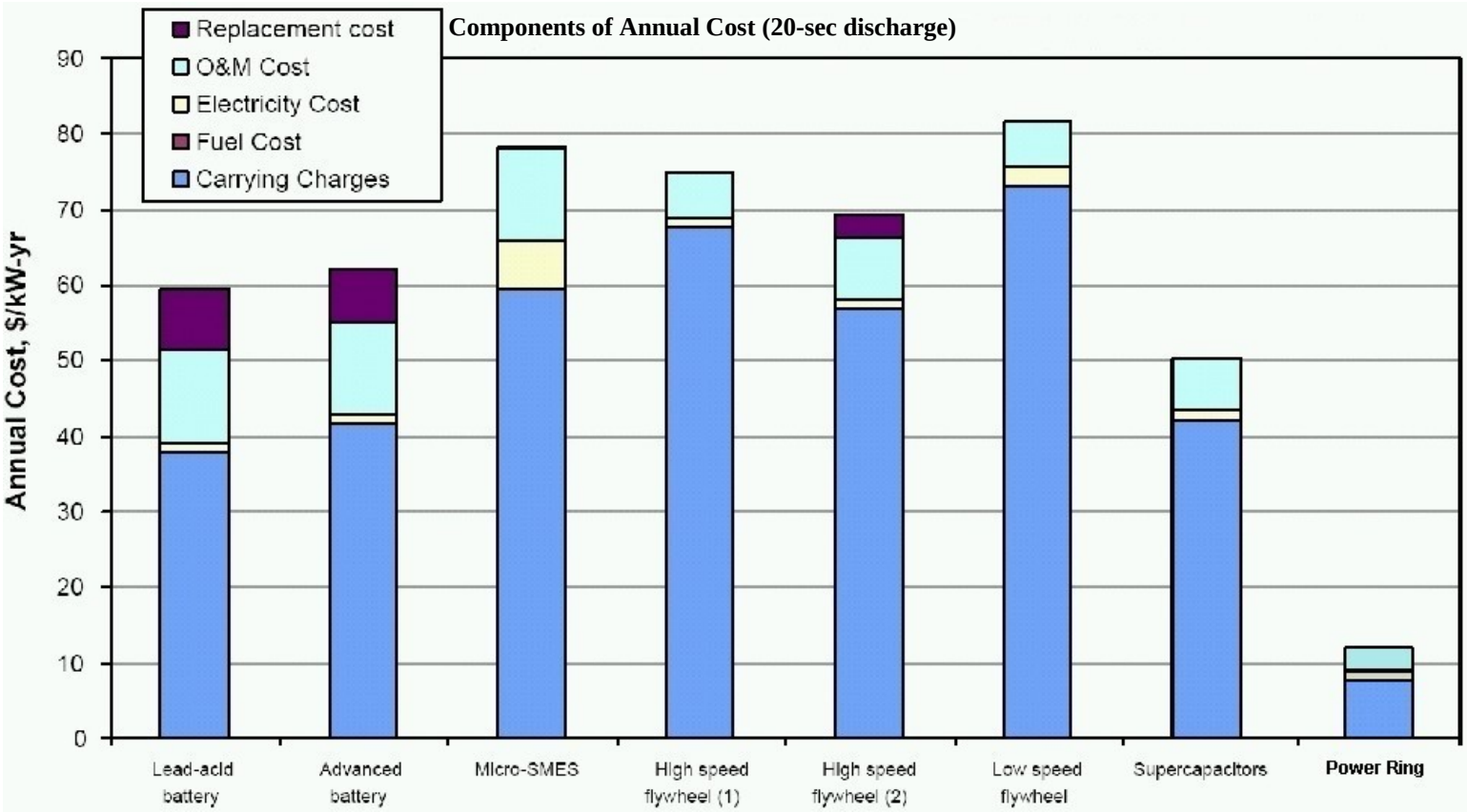

Sandia Report SAND2003-2783

45 MW, 20 second ring (250 kWh), low-volume price of $2.5 million, AC/DC converter included

Development Schedule

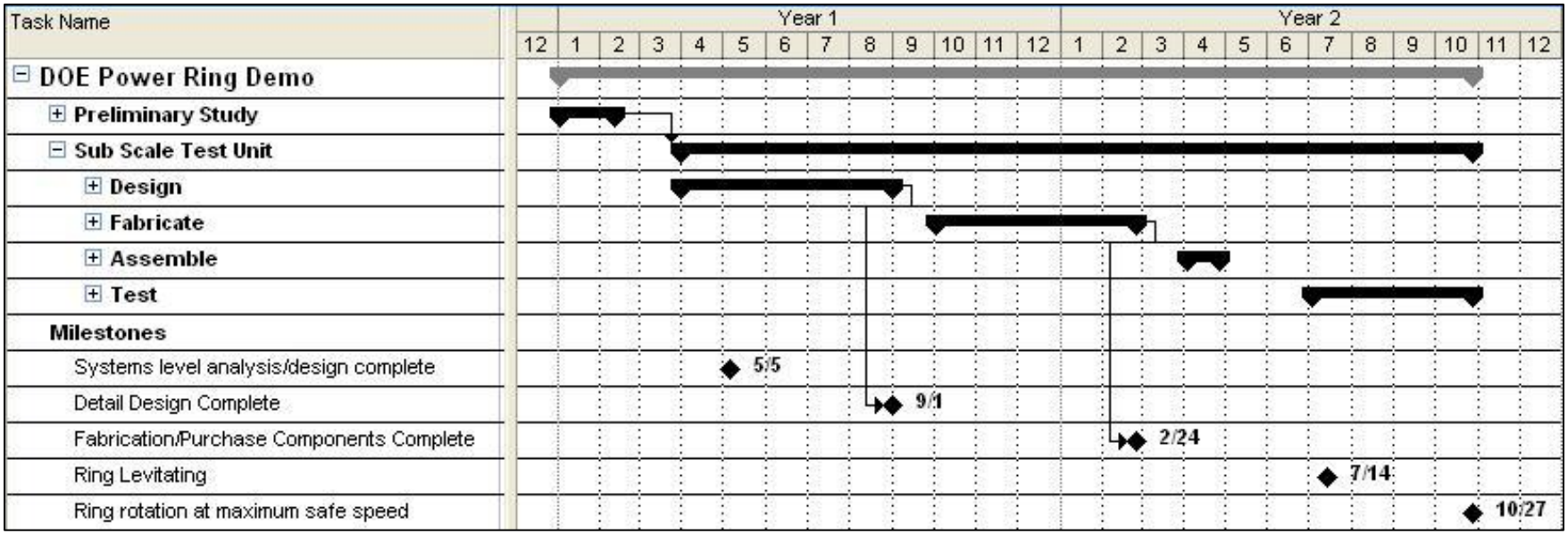

Schedule of Achievements:

6 months: Preliminary system analysis and design of several major subsystems completed, including levitation system, control actuators, and sensors.

1 year: Detailed design complete and fabrication of all components half completed.

2 years: Sub scale Power Ring (~60 cm) assembled, levitating, and spinning at highest safe rpm. Expanded contacts with potential sales channels and VC companies.