EESAT 2005

Optimizing Off-Grid Hybrid Generation Systems

October 18, 2005
San Francisco, CA

Garth P. Corey
Sandia National Laboratories

Homeland Security

U.S. COAST GUARD

Sandia National Laboratories

Symons/EECI

Sandia is a multi-program laboratory operated by Sandia Corporation, a Lockheed Martin Company, for the United States Department of Energy's National Nuclear Security Administration under contract DE-AC04-94AL85000.

ACKNOWLEDGMENTS

Funded by the U.S. Coast Guard and the Energy Storage Systems Program of the U.S. Department Of Energy (DOE/ESS) through Sandia National Laboratories (SNL).

Typical Hybrid Solar System

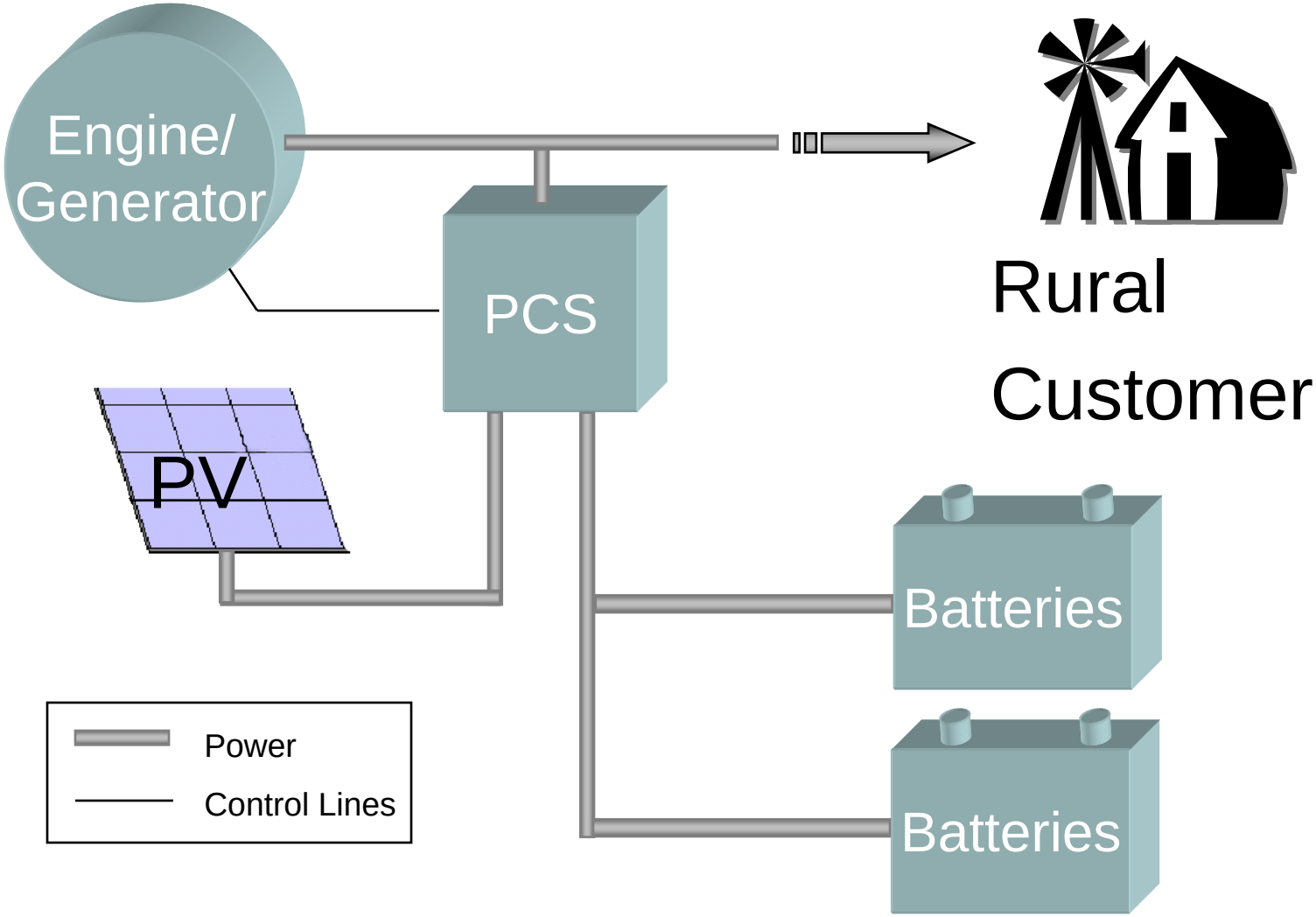

Fuel/Battery Tradeoff

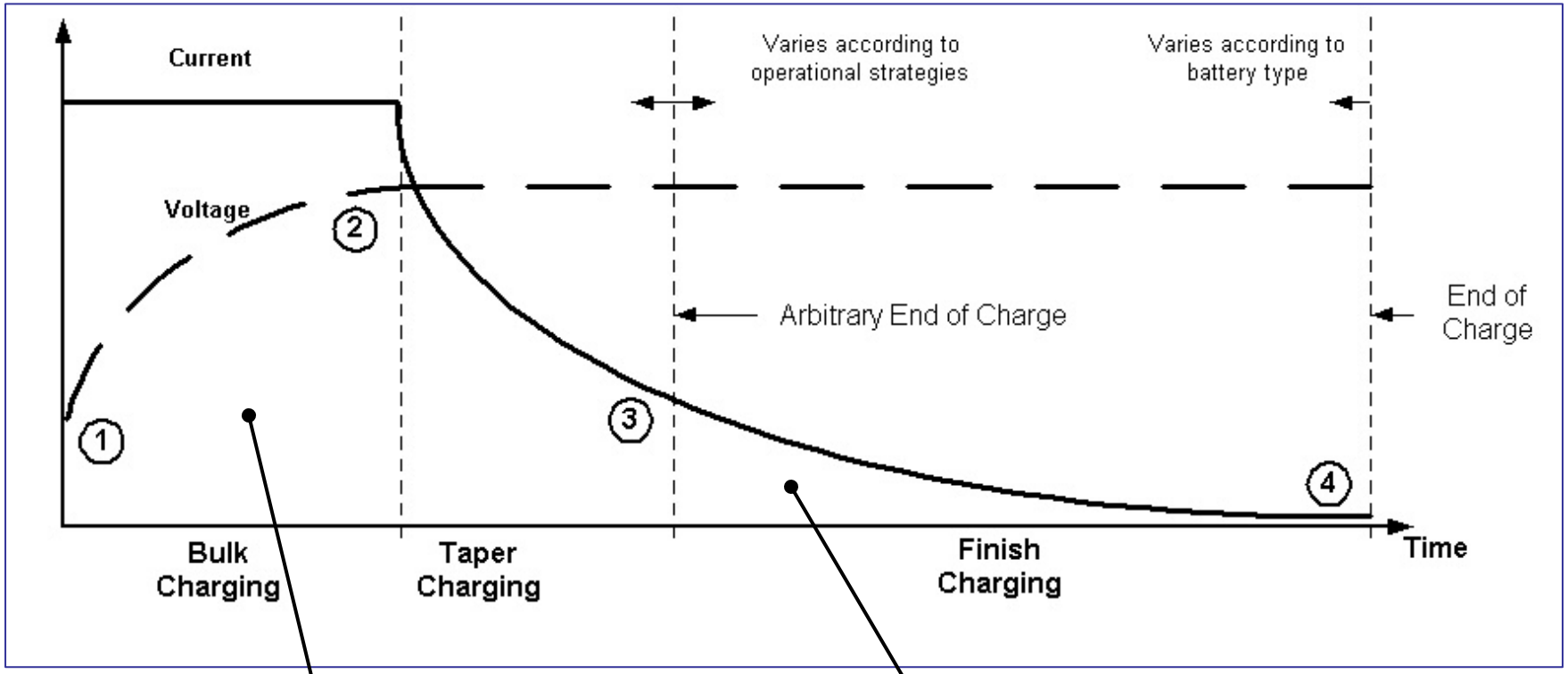

Good charge acceptance

Efficient generator operation

Necessary to fully recharge

Poor charge acceptance

Inefficient generator operation

Overview

- Typical Off-Grid Hybrid Operations
- Battery System Management
- What is ACONF
- Initial Coast Guard Project Overview
- Results of One Year Simulation Project
- The Real Value

Sandia National Laboratories

What is ACONF?

- Added circuitry between each string of batteries and the Power Conversion System (PCS)
- Hardware and software to control current to & from each string though the additional circuitry
- String currents controlled on the basis of measured parameters and battery characteristics

The ACONF Program

- **Off-Grid Performance Optimization**
  - **Low Power – Up to 10 kW**
  - **High Power – Up to 100 kW ***
- **Grid-Tied Stand-by Optimization ***
  - **New Patent ***
  - **Manages Two or more Battery Strings ***

***** To be covered by Dr. Philip Symons/EECI during DOE Peer Review

ACONF in Hybrid DC Power System

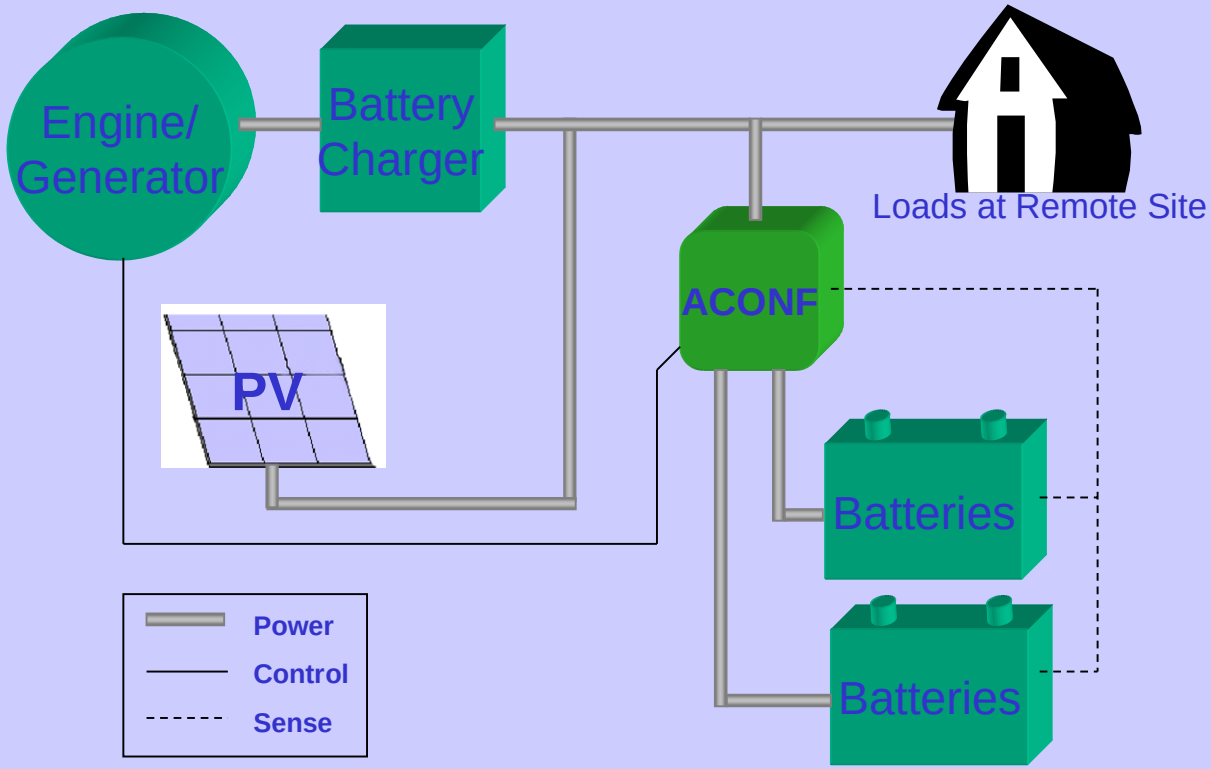

ACONF Operation
Discharge All

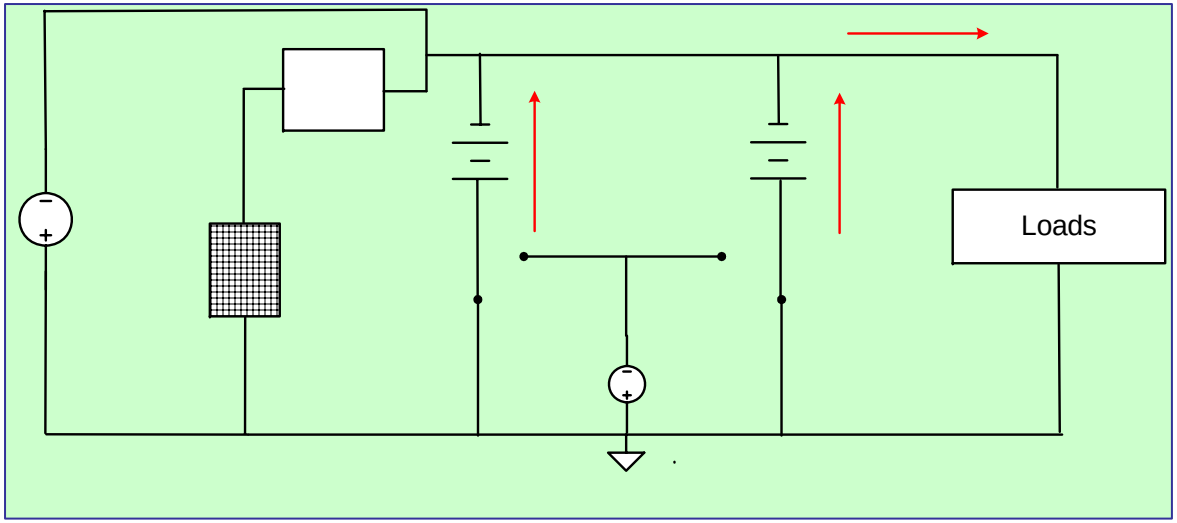

State	String A	String B	What ends state
discharge all	discharging	discharging	% Discharge from Ah count (priority) OR low Batt voltage OR time exceeds limit OR if high Batt voltage (lots of PV, no load) go to finish charge

ACONF Operation
Charge All (Bulk Charge)

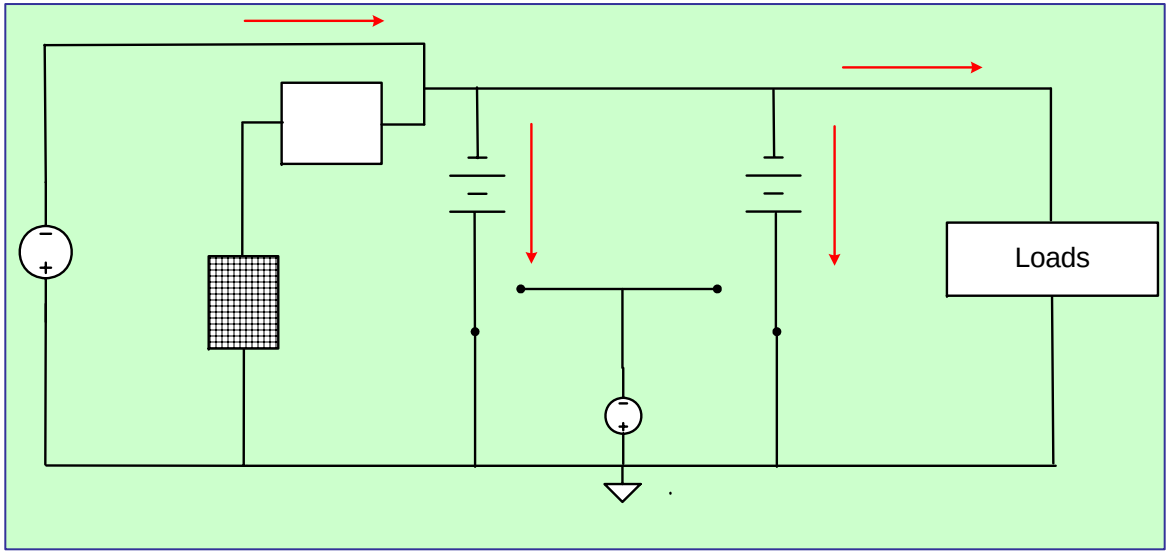

State	String A	String B	What ends state
charge all	bulk charge	bulk charge	String resistance exceeds value (approx 92-95%) OR Ah in exceeds last discharge Ah out by some %

ACONF Operation
Finish Charge String A

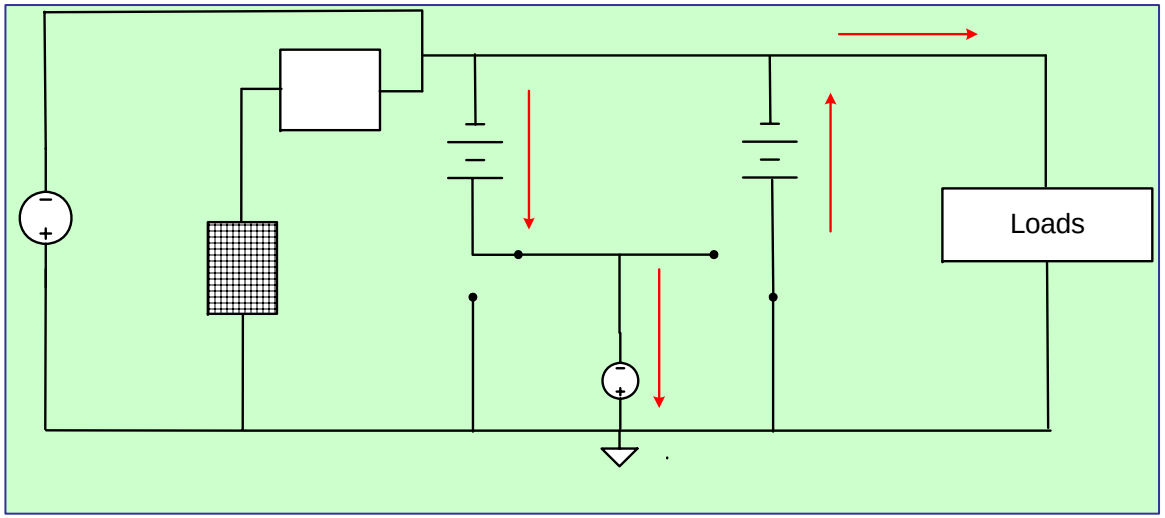

State	String A	String B	What ends state
finish charge	voltage regulated finish charge	discharging	String A current tapers to some value OR Ah exceeds 120% of last disch Ah OR time exceeds some value OR string B can't keep up (string B voltage too low)

ACONF Operation
Finish Charge String B

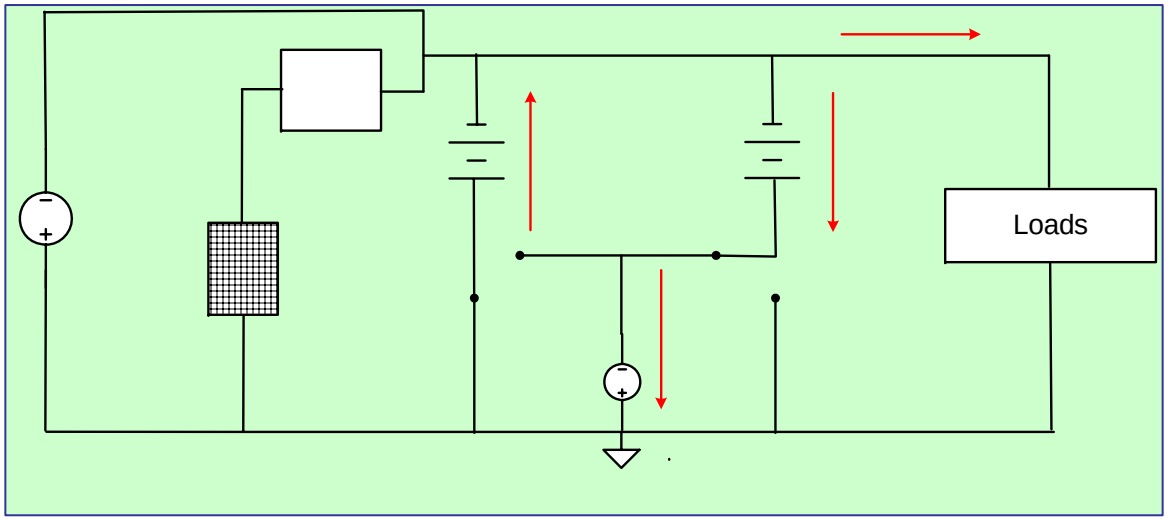

State	String A	String B	What ends state
finish charge	discharging	voltage regulated finish charge	String B current tapers to some value OR Ah exceeds 120% of last disch Ah OR time exceeds some value OR string A can't keep up (string A voltage too low)

ACONF Test
US Coast Guard NDS Sites

•NDS Sites
REMOTE

ACONF Goals:

•Save Fuel

•Extend Battery Life

DETL Evaluation:

•Side-by-side systems

Initial Coast Guard Project Overview

- **Two Identical Side-by-Side Systems**
- **Winter-Spring-Summer Simulations**
- **Metrics**
  - Propane Consumption
  - kWh Delivered to Load
  - Optimized PV Utilization
- **Outcome**

Sandia National Laboratories

ACONF Controller

Batteries

24 Vdc nominal battery strings
2 strings of 4 each 3-100A17 3-cell assemblies
GNP Absolyte IIP 100A17 Cells
(1065 Ahr/String at C/100)

Generators

Mechron DCA24 DC Generators
7 kW 24 Vdc

Mechron Controllers

Loads

1.25 Ohms at 24 VDC = 460 W

Dates Simulated by Test Schedule

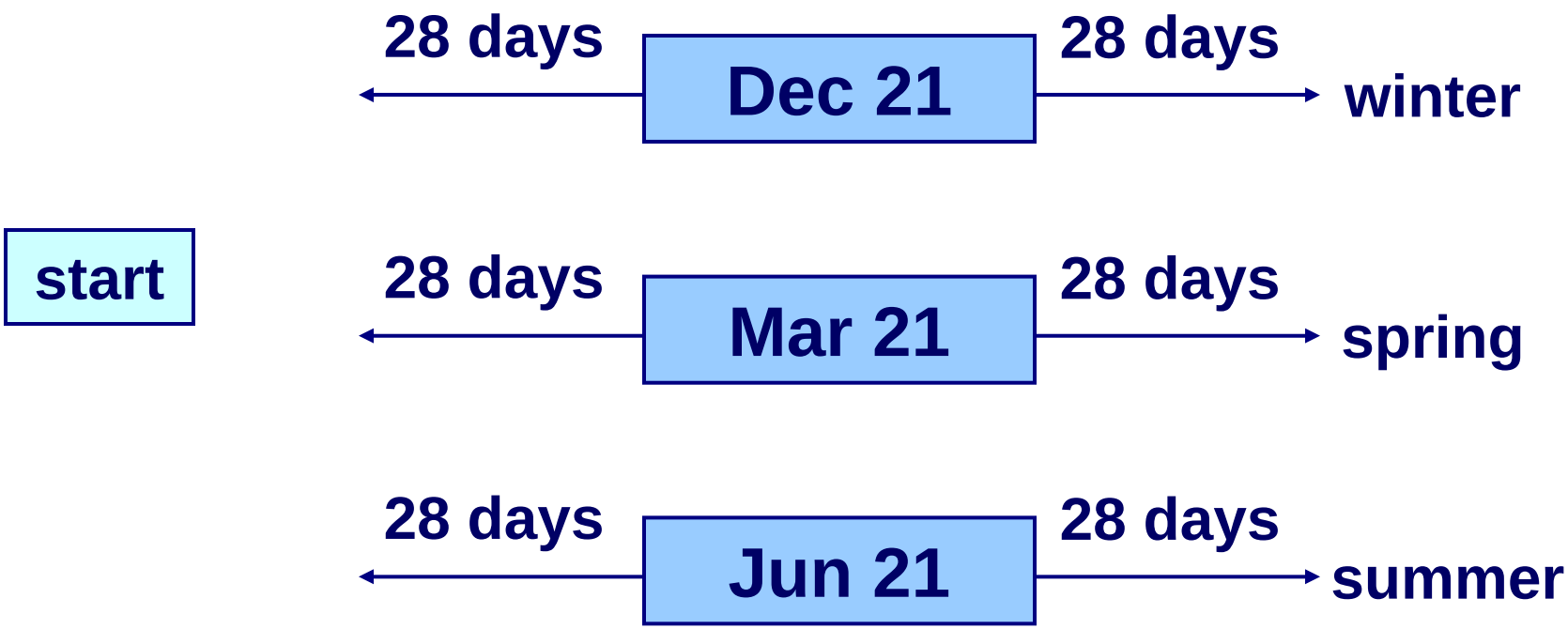

Fuel Consumption History

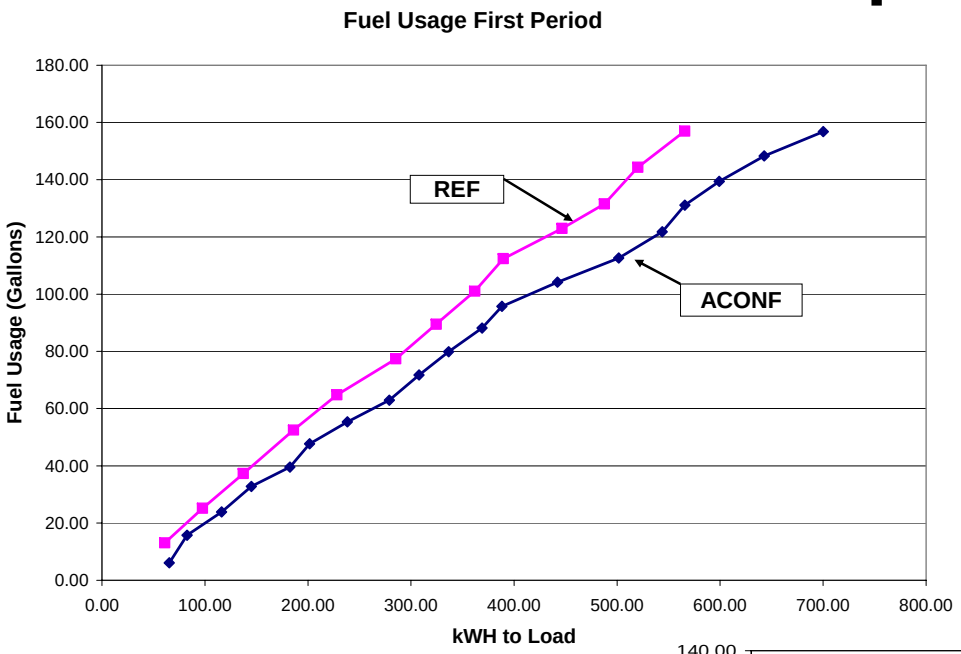

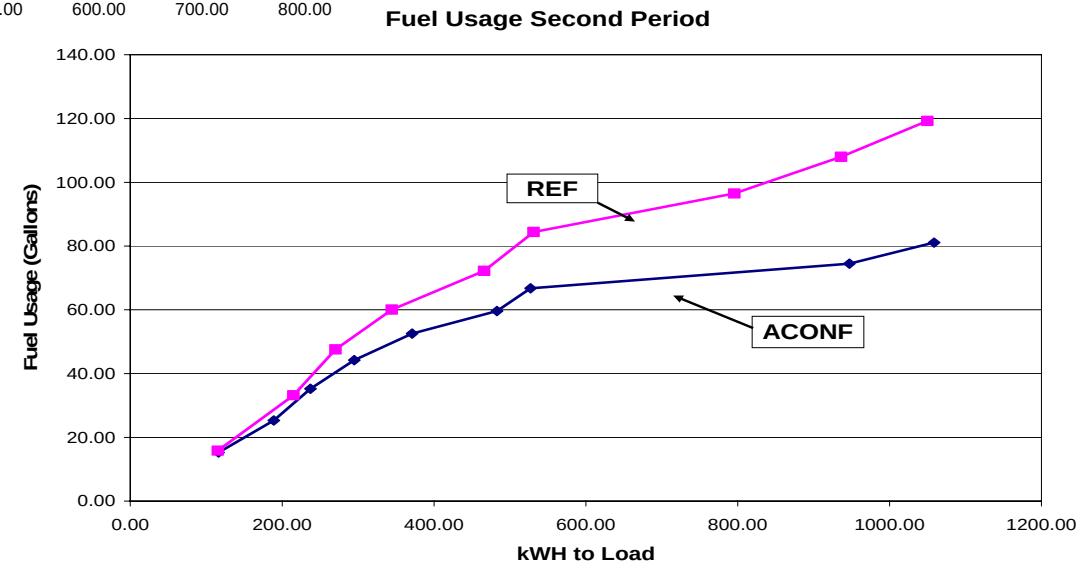

Representative Generator Run Times and Start History

Parameter	ACONF	REF
Number of Cycles	19	14 (13)
Cumulative Gen Minutes	8222	9038
Gen Mins per kWh to Load	11.7	16.0
Gen Starts per MWh to Load	27	23

ACONF-REF Compared

Second Period ACONF Cycle Data				
ACONF	Fuel Consumed (Gallons)	Cumulative Gallons Consumed	Generator Run Time (minutes)	Cumulative Generator Run (minutes)
Spring Cycle	15.28	15.28	765	765
	10.05	25.33	471	1236
	9.91	35.25	486	1722
	8.99	44.23	436	2158
	8.34	52.57	607	2765
	7.06	59.63	351	3116
Summer Cycle	7.16	66.80	354	3470
	7.66	74.45	562	4032
	6.63	81.08	333	4365

Second Period Reference Cycle Data				
REF	Fuel Consumed (Gallons)	Cumulative Gallons Consumed	Generator Run Time (minutes)	Cumulative Generator Run (minutes)
Spring Cycle	15.85	15.85	887	887
	17.36	33.21	962	1849
	14.37	47.58	820	2669
	12.47	60.06	648	3317
	12.15	72.21	742	4059
Summer Cycle	12.20	84.41	689	4748
	12.07	96.48	718	5466
	11.49	107.97	664	6130
	11.26	119.23	655	6785

REF System – Full Charge

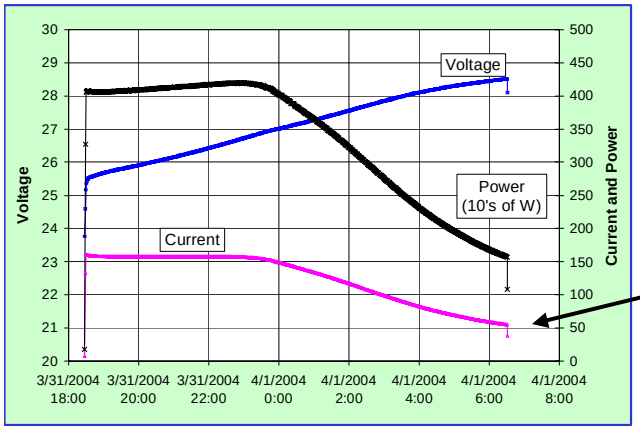

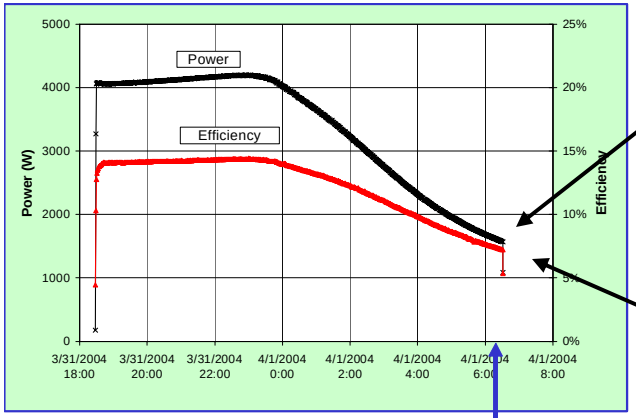

Generator efficiency reduced during current taper

Incomplete recharge

Generator OFF

ACONF System - Bulk Charge Only

ACONF System Bulk Charge

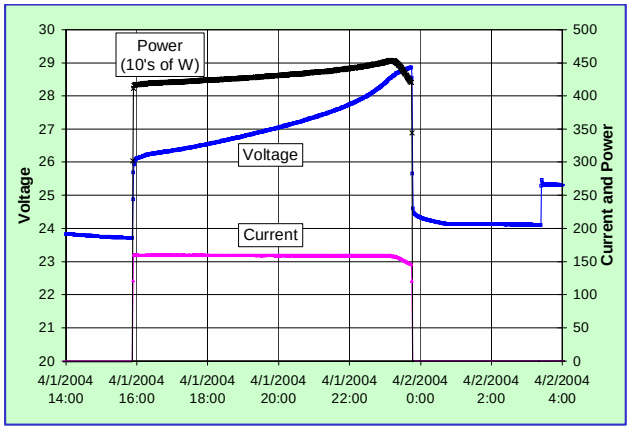

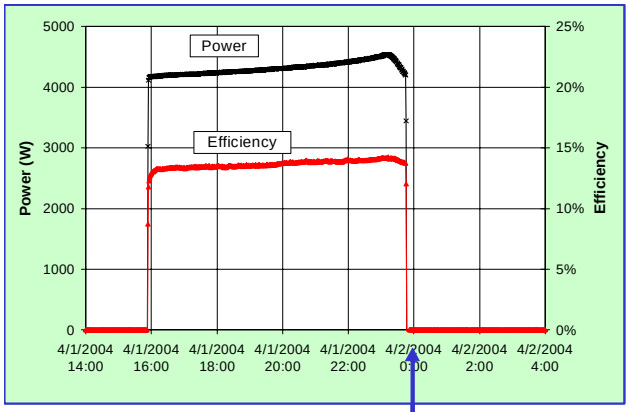

Generator OFF

Running generator for long periods at low efficiency avoided

Summary of ACONF Testing to Date for USCG – The Real Value

- **Solar optimization enabled for second half of test program which reduced number of generator starts for ACONF System**
- **ACONF generator started 17% more frequently than REF generator, but generator run time reduced by ~38%**
- **For one-year simulation program, the ACONF system consumed an average of 25% less fuel than the REF system**
- **The study of ACONF management of battery state of health compared to REF system in progress**