OLD FILE NAME: 101630/A2

PREPARED BY: E.S.M.	SANDIA NATIONAL LABORATORIES FACILITIES ENGINEERING	DRAWING NO.: WU5003
CHECKED BY: C.W.B.		SCALE: NONE
DATE: 6-15-01 / REV: B	AIR AND VACUUM VALVE	CIVIL STDSIT.DGN

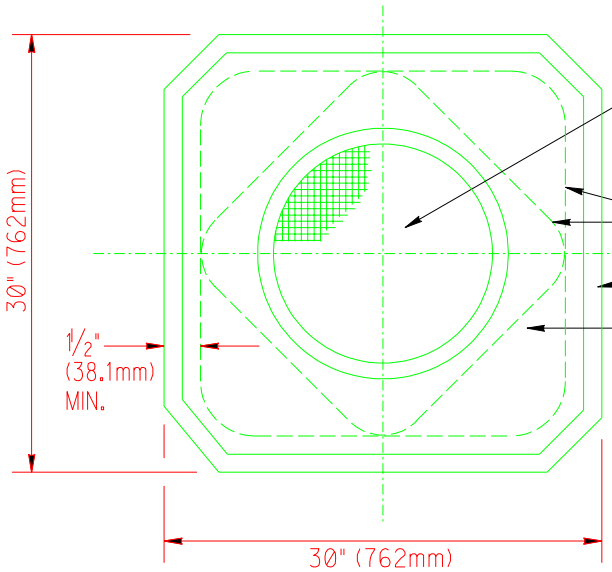

TOP VIEW

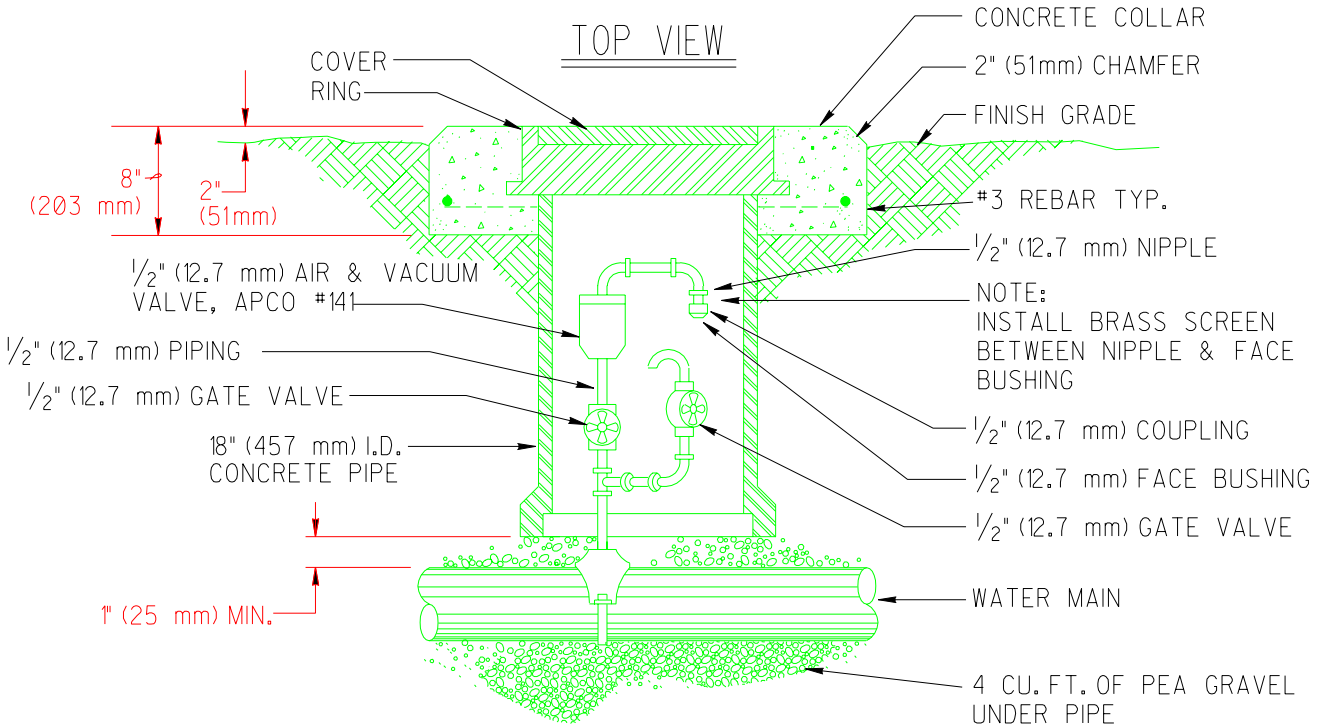

SECTION

"Property of Sandia National Laboratories Facilities Management and Operation Center (FMOC).
No duplication or alteration allowed without the expressed permission and authorization of FMOC."