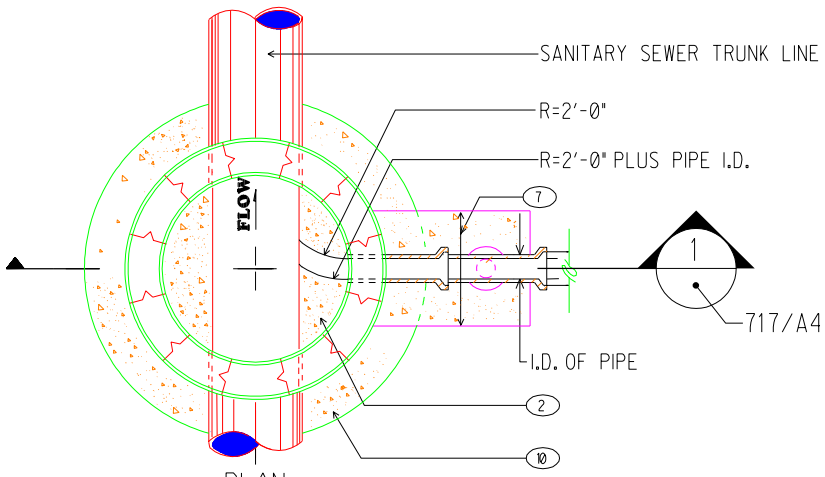

PLAN

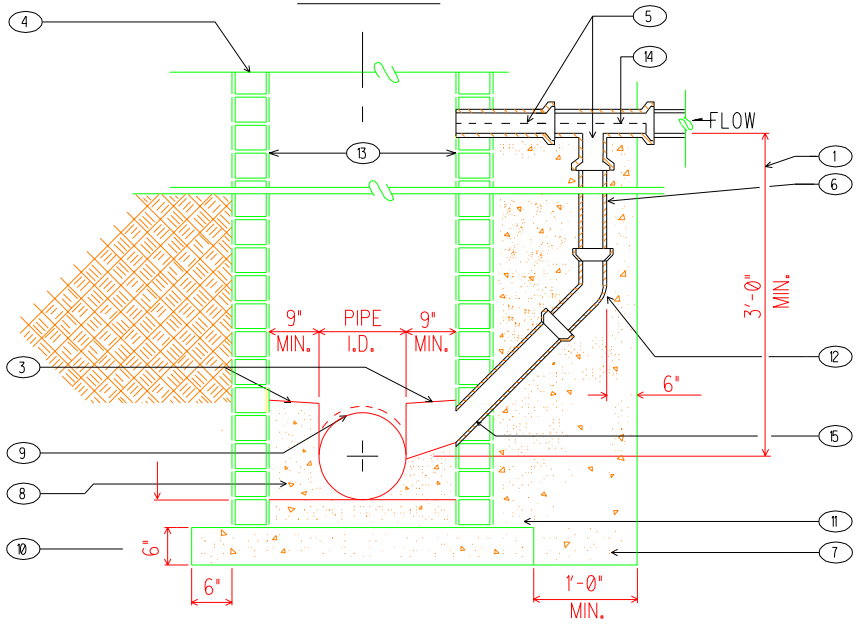

SECTION

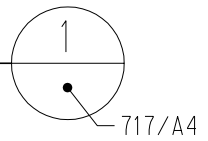

GENERAL NOTES:

1. EXCAVATION AND BACKFILLING SHALL CONFORM TO SECTIONS 02200 AND 02222 OF THE SANDIA STANDARD SPECIFICATIONS.
2. SANITARY SEWER WORK SHALL CONFORM TO SECTIONS 02725 AND 02730 OF THE SANDIA STANDARD SPECIFICATIONS.
3. CONCRETE WORK SHALL CONFORM TO SECTION 03300 OF THE SANDIA STANDARD SPECIFICATIONS.

KEYED NOTES:

1. VERTICAL DROP.
2. FORM PIPE INVERT IN SHELF.
3. SLOPE SURFACE AT 1" PER FOOT
4. MANHOLE TYPE FOR UPPER PORTION SHALL BE AS SPECIFIED ON PLANS.
5. USE D.I. OR P.V.C. THROUGHOUT DROP.
6. TYPICAL BELL AND SPIGOT.
7. CONCRETE SUPPORT WIDTH EQUALS PIPE O.D. PLUS 6" MINIMUM EACH SIDE.
8. CONCRETE FILL TO BE 3000 P.S.I.
9. SANITARY SEWER TRUNK LINE BEYOND.
10. REINFORCED CONCRETE BASE. No. 4 REBAR, 6" O.C. BOTH WAYS.
11. FOR NEW DROP ON EXISTING MANHOLE, CONSTRUCT REINFORCED 3'-0" x 3'-0" CONCRETE BASE BEFORE CONSTRUCTING DROP SUPPORT.
12. LONG RADIUS (45°) BEND.
13. I.D. OF NEW OR EXISTING MANHOLE AS SPECIFIED ON PLANS. 4' MINIMUM I.D.
14. TOP OF CONCRETE SUPPORT BEYOND.
15. 4" ABOVE SPRING LINE OR AS INDICATED ON PLANS.

PREPARED BY: E.S.M.
CHECKED BY: C.W.B.
DATE: 6-15-01
REV: A

SANDIA NATIONAL LABORATORIES
FACILITIES ENGINEERING

DROP MANHOLE DETAIL

DRAWING NO.: WU3002
SCALE: NONE
CIVIL
STDSIT.DGN

OLD FILE NAME: 101717/A4

"Property of Sandia National Laboratories Facilities Management and Operation Center (FMOC).
No duplication or alteration allowed without the expressed permission and authorization of FMOC."