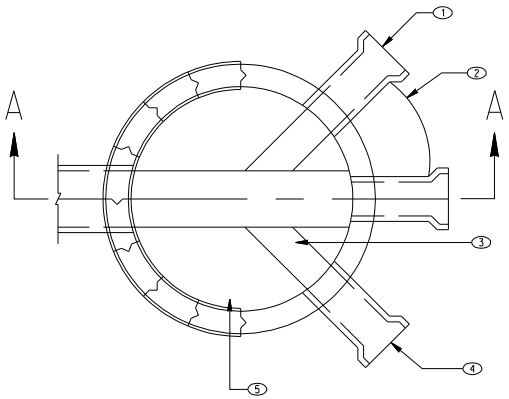

SERVICE LINE AT DEAD END OR CUL-DE- SAC

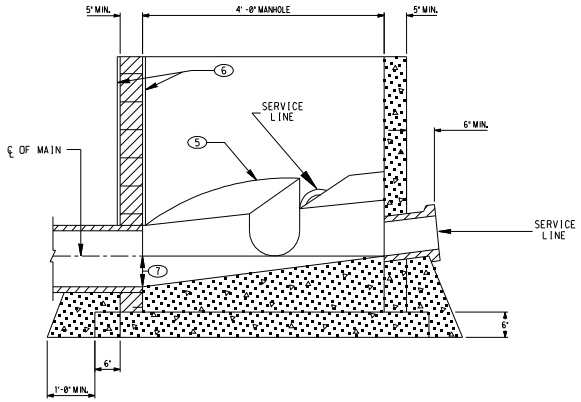

SECTION A-A

GENERAL NOTES

1. ALL CONCRETE SHELF SLOPES TO BE ONE INCH PER FT.
2. ONE FOURTH INCH PER FT. MIN. SLOPE FOR 4" OR 6" SERVICE LINE.
3. NEW SERVICE CONNECTIONS TO EXIST. MH'S. MUST BE CORE DRILLED.
4. 8" OR LARGER SERVICE CONNECTIONS MUST BE MADE TO A MH.

KEYED NOTES

1. CAST IRON SERVICE STUB.
2. VARIABLE WITH MAX. ANGLE OF 90°
3. FORM INVERT IN SHELF.
4. BELL END.
5. CONCRETE FILL TO BE TYPE II CEMENT.
6. PLASTER INSIDE AND OUTSIDE WITH 1/2" MORTAR.
7. INVERT ELEVATIONS OF SERVICE LINES SHALL BE THE SAME AS THE SPRING LINE ELEVATION OF THE SEWER MAIN.

P.O. / PROJECT NO.	REV	DATE	DESCRIPTION	DWN	CKD	APP

U.S. DEPARTMENT OF ENERGY
NNSA/SANDIA SITE OFFICE — ALBUQUERQUE, NEW MEXICO

SANDIA NATIONAL LABORATORIES

SEWER SERVICE LINE CONNECTION AT M.H.

P.O.	
PROJECT NO.	
DRAWN BY	J.RIDER
CHECKED BY	J.MICHAELS
SNL ENGR	M.ADAMS
DATE	07/19/2007
SEQ.	

DISCP: W — SUB-DISCP: R — STD

SIZE: D+ — DRAWING NO: WR5006STD.DGN

OLD FILENAME: WR5006STD.DGN
FILENAME: WR5006STD.dgn

"Property of Sandia National Laboratories Facilities Management and Operation Center (FMOC). No duplication or alteration allowed without the expressed permission and authorization of FMOC."