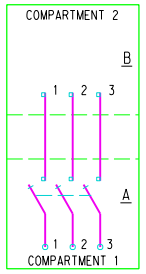

PMH-3 (4)

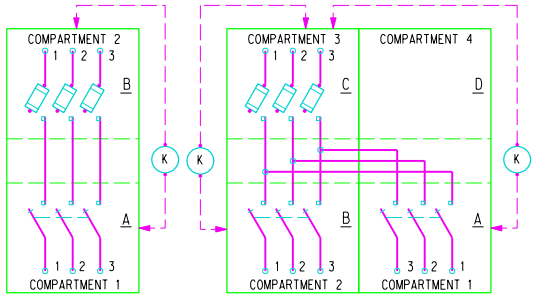

PMH-5 PMH-6 (4)

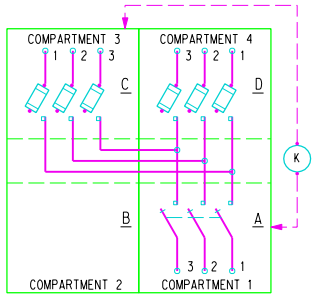

PMH-7 (4)

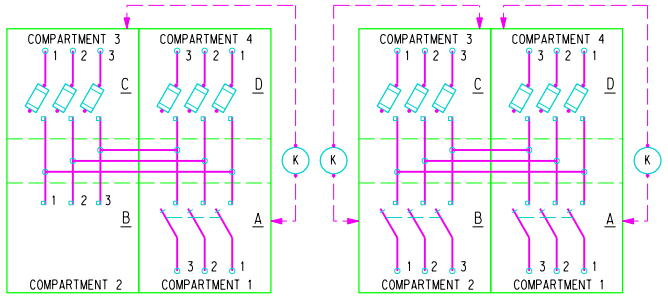

PMH-8 (4) PMH-9 (4)

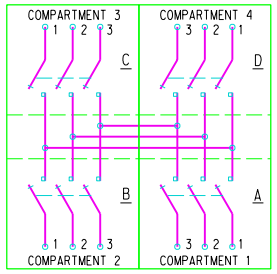

PMH-10 (1)

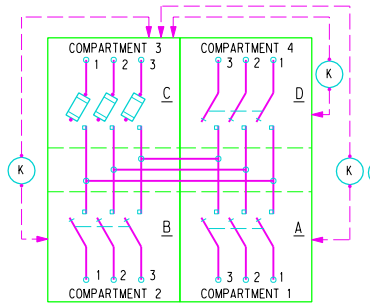

PMH-11 (4)

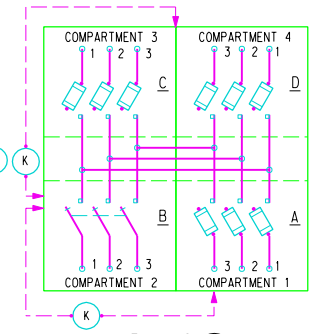

PMH-12 (4)

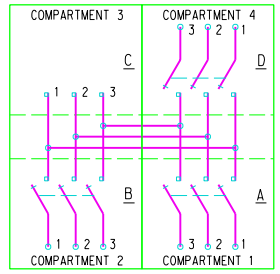

PMH-13 (4)

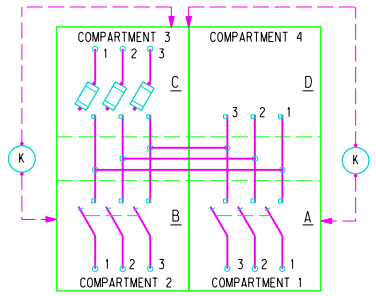

PMH-14 (4)

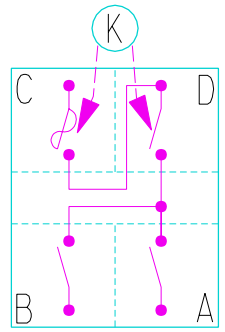

PMH-19

S & C PAD - MOUNTED SWITCHGEAR CONFIGURATION

NO SCALE

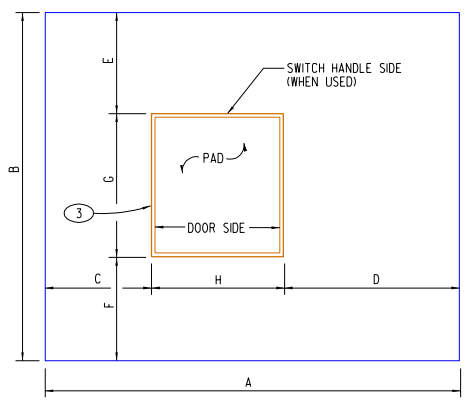

TOP VIEW

S & C MODEL NO.	DIMENSIONS							
	A	B	C	D	E	F	G	H
PMH-6 THRU 9, 11, 14 AND 19	21'-0"	12'-9"	* 10'-0"	5'-0"	3'-0"	3'-0"	6'-9"	6'-0"
PMH-10 AND 13	16'-0"	12'-9"	5'-0"	5'-0"	3'-0"	3'-0"	6'-9"	6'-0"
PMH-12	26'-0"	12'-9"	* 10'-0"	* 10'-0"	3'-0"	3'-0"	6'-9"	6'-0"
PMS-5	20'-0"	10'-3"	* 10'-0"	5'-0"	3'-0"	3'-0"	4'-3"	5'-0"

* - SPACE REQUIRED FOR FUSED SECTION.

WORKING SPACE REQUIRED FOR PADMOUNTED SWITCHGEAR

NO SCALE

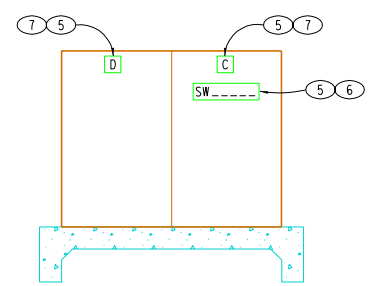

DOOR VIEW

S & C PADMOUNT SWITCHGEAR LABELING DETAILS

NO SCALE

GENERAL NOTES

1. S & C PMH MODELS CONTAIN 600 AMP EXTERNAL HANDLE - OPERATED SWITCHES.
2. S & C PMS MODELS CONTAIN 200 AMP EXTERNAL HANDLE - OPERATED SWITCHES.
3. FUSE HOLDERS SHALL BE SMU-20 AND FUSE SIZES SHALL BE SHOWN ON CONSTRUCTION DRAWINGS.

KEYED NOTES

1. SEE DRAWING WP5020STD FOR DETAILS.
2. SEE DRAWING WP6010STD FOR DETAILS.
3. FUSE SIDE (WHEN USED) SHOULD BE INSTALLED TOWARD THE STREET.
4. USE OF THIS TYPE OF SWITCH REQUIRES PRIOR APPROVAL FROM ORGANIZATION 7811
5. 3⅞" REFLECTIVE PRESSURE SENSITIVE BLACK ON YELLOW LABELS (ALMETEK).
6. SWITCHGEAR NUMBER TO BE DESIGNATED BY SANDIA AND SHALL BE SHOWN ON CONSTRUCTION DRAWINGS.
7. LABEL OTHER DOOR SIDE OF SWITCHGEAR WITH "B" AND "A".

P.O. PROJECT NO.	REV	DATE	DESCRIPTION	DWN	CKD	APP
		6/15/02	UPDATE	EG	LR	
		6/15/01	UDS MODS	EG	FL	

U.S. DEPARTMENT OF ENERGY

KIRTLAND AREA OFFICE — ALBUQUERQUE, NEW MEXICO

SANDIA NATIONAL LABORATORIES

S&C SWITCHGEAR CONFIGURATION&CLEARANCE

CIVIL WORKS POWER — STANDARD

P.O.	
PROJECT NO.	
DRAWN BY	J. MARTINEZ
CHECKED BY	P. DURAN
SNL ENGR	L. ROYBAL
DATE	8/91
SIZE	D+
DRAWING NO	WP5019STD
SEQ.	

OLD FILE NAME: 084820/E03

MICROSTATION FILE

FILE NAME: WP5019STD.DGN

REFERENCE FILES:

"Property of Sandia National Laboratories Facilities Management and Operation Center (FMOC). No duplication or alteration allowed without the expressed permission and authorization of FMOC."