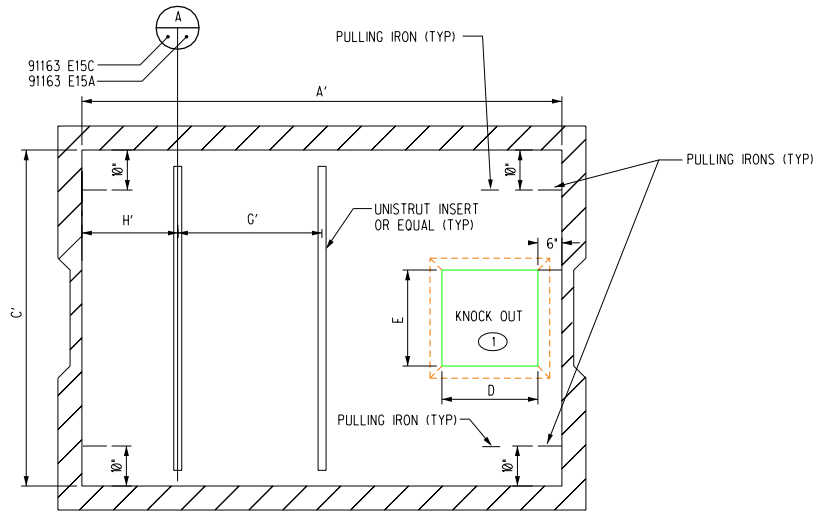

LONGITUDINAL SECTION 8'X10'
SECTION B-B

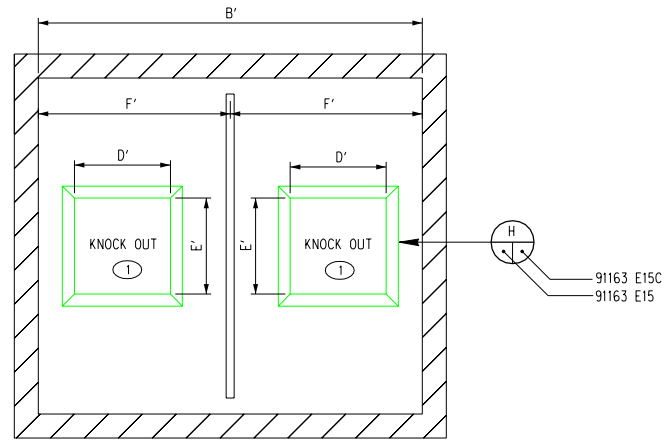

TRANSVERSE SECTION 10'X12'
SECTION A-A

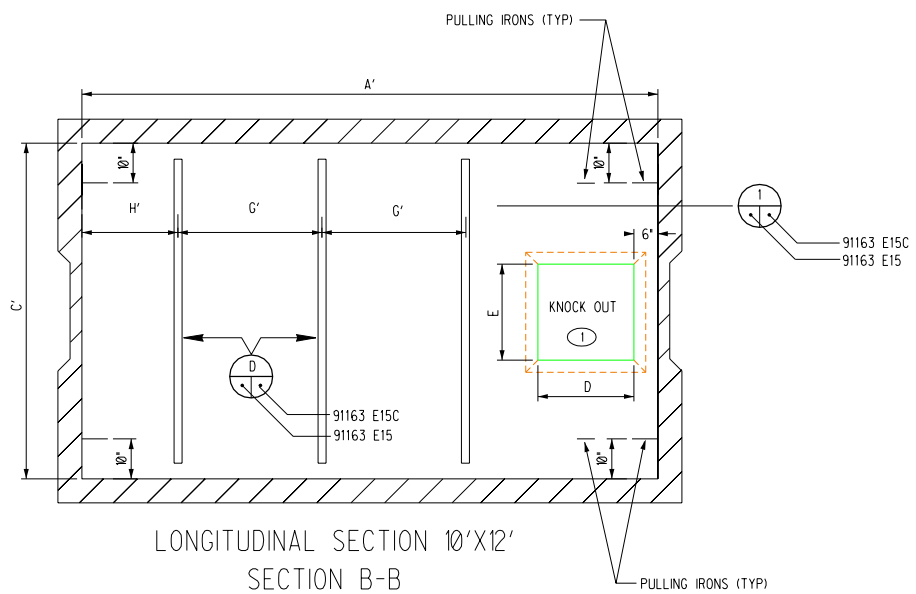

LONGITUDINAL SECTION 10'X12'
SECTION B-B

MANHOLE DIMENSIONS (INSIDE DIMENSIONS)								
	A'	B'	C'	D'*	E'*	F'	G'	H'
8' X 10'	10'-0"	8'-0"	7'-0"	2'-4"	2'-4"	4'-0"	3'-0"	2'-0"
10' X 12'	12'-0"	10'-0"	7'-0"	2'-4"	2'-4"	5'-0"	3'-0"	2'-0"

*MINIMUM DIMENSIONS

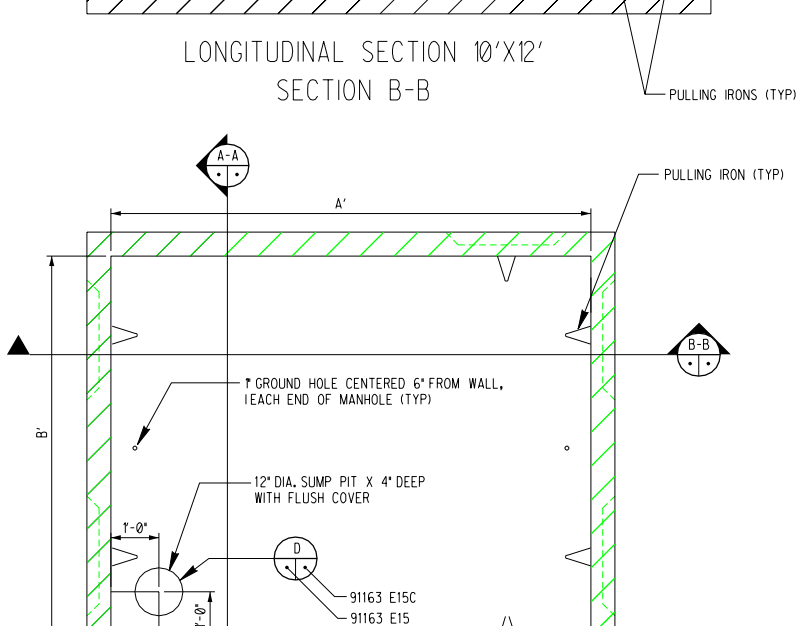

BOTTOM PLAN 10'X12'

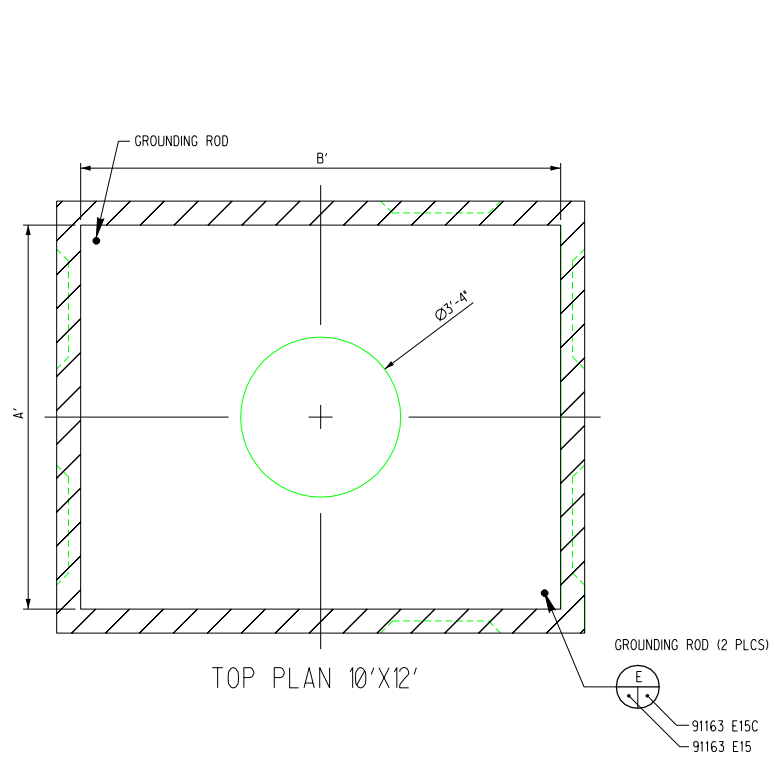

TOP PLAN 10'X12'

SCALE: 1/2" = 1'-0"

GENERAL NOTES

1. MANHOLE SHALL BE DESIGNED FOR AASHTO HS-20 TRUCK LOADING IN ACCORDANCE WITH:
   A) AMERICAN CONCRETE INSTITUTE 318-89.
   B) ASTM C857-82, MINIMUM STRUCTURAL DESIGN LOADING FOR UNDERGROUND PRE-CAST CONCRETE UTILITY STRUCTURES.
2. DESIGN DEPTH (GROUND SURFACE TO TOP OF MANHOLE):
   MIN: AT GRADE
   MAX: 5' BELOW GRADE
3. INSTALLATION DEPTH (TOP OF MANHOLE) SHALL BE DONE IN ACCORDANCE WITH APPLICABLE CONSTRUCTION DRAWING.
4. CHANNEL TRACK SHALL BE UNISTRUT P3200 OR POWER-STRUT PS349.
5. SUMP SHALL BE CONSTRUCTED WITH PERFORATED COVER OR GRATE THAT FITS FLUSH WITH FLOOR.
6. PULLING IRONS SHALL BE DESIGNED FOR A WORKING LOAD OF 5000 POUNDS MINIMUM (THE FACTOR OF SAFETY SHALL NOT BE LESS THAN 2X). PULLING IRONS SHALL ALSO BE PROPERLY PROTECTED FROM CORROSION.
7. INTERIOR OF MANHOLES ARE TO BE PAINTED WHITE.
8. REFER TO DRAWING 91163E/15A FOR MANHOLE DETAILS.

KEYED NOTES

(1) REFER TO PLAN AND PROFILE DRAWINGS FOR LOCATIION OF KNOCKOUTS.

REV	DATE	DESCRIPTION	DWN	CKD	APP
A	5/1/02	CONVERTED TO STANDARD DRAWING	ELG	GT	

P.O.
PROJECT NO.

U.S. DEPARTMENT OF ENERGY
KIRTLAND AREA OFFICE — ALBUQUERQUE, NEW MEXICO

SANDIA NATIONAL LABORATORIES

POWER MANHOLE CONSTRUCTION DETAILS

P.O.	TW0653
PROJECT NO.	AW-2643
DRAWN BY	SMM
CHECKED BY	LMR
SNL ENGR	
DATE	2/95
SEQ.	

CIVIL WORKS POWER — STANDARD

SIZE D — DRAWING NO. WP3005STD

OLD FILE NAME: 091163E15C

MICROSTATION FILE
FILE NAME: wp3005std.dgn
REFERENCE FILES:

"Property of Sandia National Laboratories Facilities Management and Operation Center (FMOC). No duplication or alteration allowed without the expressed permission and authorization of FMOC."