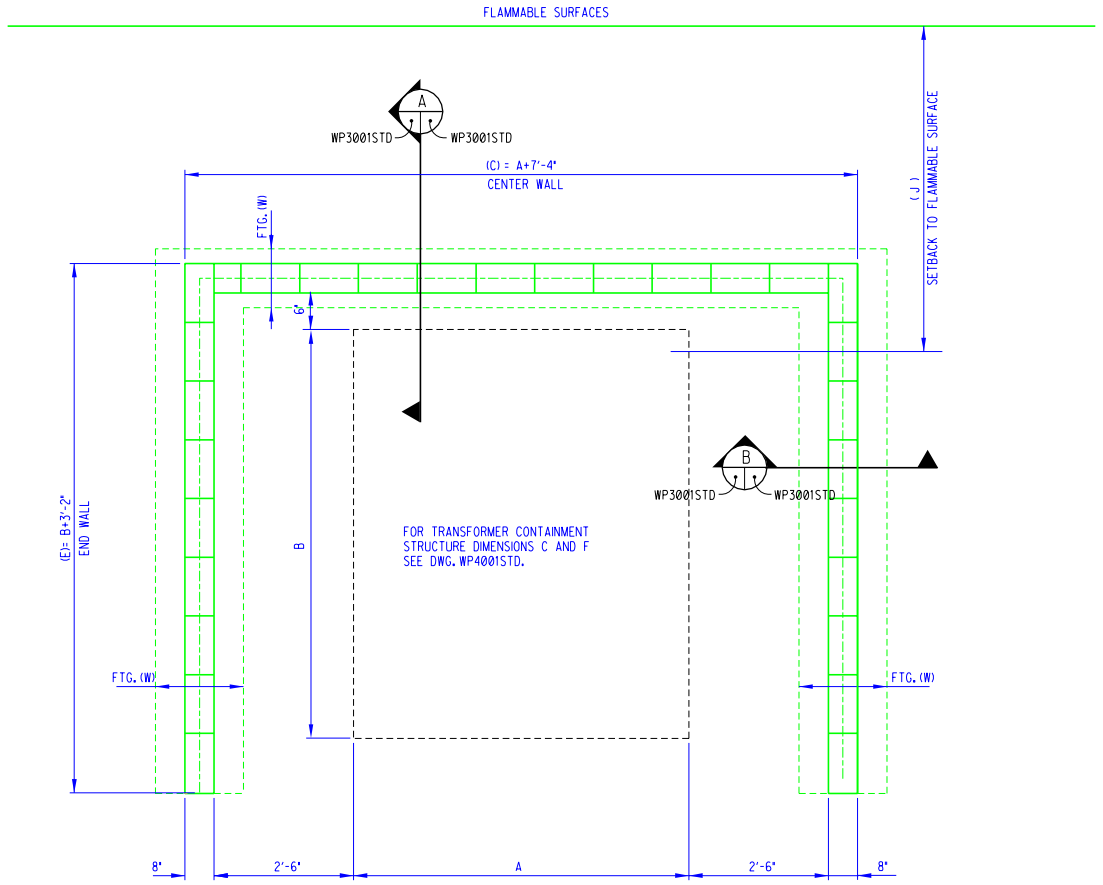

PLAN

SCALE: 1/2" = 1'-0"

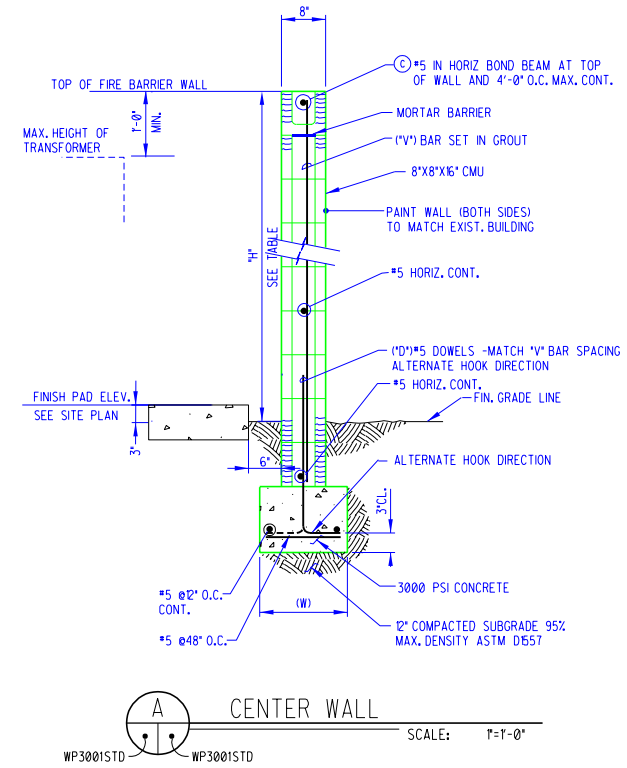

A CENTER WALL

SCALE: 1"=1'-0"

WP3001STD WP3001STD

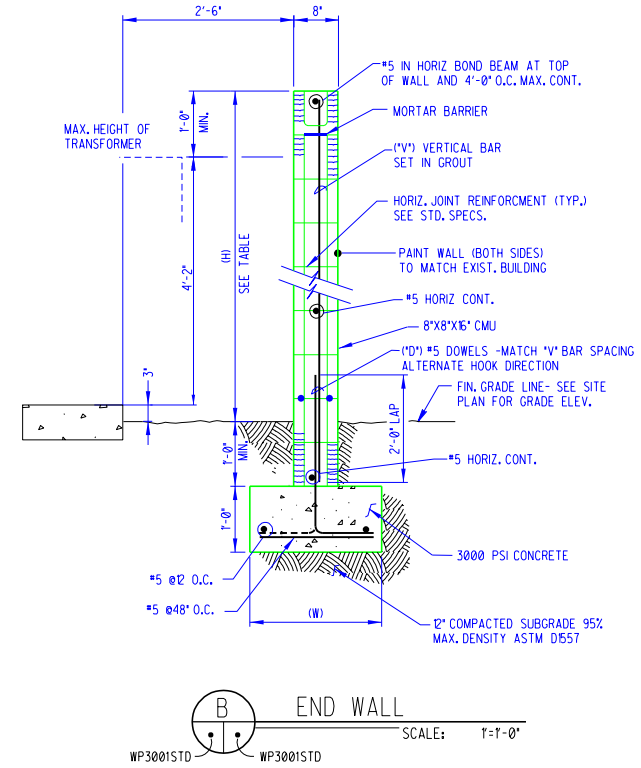

B END WALL

SCALE: 1"=1'-0"

WP3001STD WP3001STD

GENERAL NOTES

1. A STUCCO FINISH TO MATCH BLDG. TEXTURE AND COLOR CAN BE USED WHERE APPROVED.
2. "H" AND "J" DIMENSION ARE SHOWN IN THE TABLES ON THIS SHEET. "J" IS THE DISTANCE FROM THE INSIDE OF OIL CONTAINMENT CURB TO FLAMMABLE MATERIAL WHICH IS TO BE PROTECTED.
3. SEE DRAWING WP4001STD, PLAN AND SECTIONS FOR "A" & "B" DIMENTIONS.
4. BARRIER WALL HEIGHT SHALL EXTEND A MININUM OF 1FT. ABOVE THE TOP OF TRANSFORMER.

REQUIRED SNL SPECIFICATIONS

1. CONCRETE MASONRY SHALL BE CONSTRUCTED IN ACCORDANCE WITH STD. SPECIFICATION SECTION 04220
2. CAST IN PLACE CONCRETE SHALL BE CONSTRUCTED IN ACCORDANCE WITH STD. SPECIFICATIONS SECTION 03300
3. SUBGRADE PREP SHALL BE CONSTRUCTED IN ACCORDANCE WITH STD. SPECIFICATION SECTION 02222.
4. REINFORCING STEEL SHALL BE DEFORMED BARS, GRADE 60, ASTM A 615.
5. PAINTING SHALL BE IN ACCORDANCE WITH STD. SPECIFICATION SECTION 09900.

CONSTRUCTION NOTES:

1. PROVIDE 4" THICK PIT-RUN GRAVEL AROUND TRANSFORMER CONTAINMENT PAD.
2. PROVIDE POSITIVE DRAINAGE AWAY FROM TRANSFORMER CONTAINMENT PAD & FIRE BARRIER WALLS. SEE CIVIL SITE PLAN.
3. GROUT SOLID ALL BLOCK CELLS CONTAINING REINFORCING AND ALL CELLS BELOW GRADE.
4. PROVIDE HORIZONTAL CORNER BARS W/2'-0" OVERLAPS ON ALL HORIZONTAL BARS.

75 KVA

SEPARATION (J) FT.	WALL HEIGHT (H) FT.	FOOTING WIDTH (W) FT. END WALL	FOOTING WIDTH (W) FT. CENTER WALL	LENGTH OF END WALL (E) *	LENGTH OF CENTER WALL (C)
3.8	9	3'-0"	1'-8"	10'-9 *	14'-3"
4.3	8	2'-6"	1'-8"	10'-9 *	14'-3"
4.9	7	2'-6"	1'-4"	10'-9 *	14'-3"
5.8 TO 16.2	6	2'-0"	1'-4"	10'-9 *	14'-3"
>16.2	N O W A L L R E Q U I R E D				

300 KVA

SEPARATION (J) FT.	WALL HEIGHT (H) FT.	FOOTING WIDTH (W) FT. END WALL	FOOTING WIDTH (W) FT. CENTER WALL	LENGTH OF END WALL (E) *	LENGTH OF CENTER WALL (C)
4.4	9	3'-0"	1'-8"	11'-4"	15'-8"
4.9	8	2'-6"	1'-8"	11'-4"	15'-8"
5.6	7	2'-6"	1'-4"	11'-4"	15'-8"
6.6 TO 17.2	6	2'-0"	1'-4"	11'-4"	15'-8"
>17.2	N O W A L L R E Q U I R E D				

750 KVA

SEPARATION (J) FT.	WALL HEIGHT (H) FT.	FOOTING WIDTH (W) FT. END WALL	FOOTING WIDTH (W) FT. CENTER WALL	LENGTH OF END WALL (E) *	LENGTH OF CENTER WALL (C)
5.2	9	3'-0"	1'-8"	12'-1"	15'-4 *
5.8	8	2'-6"	1'-8"	12'-1"	15'-4 *
6.7	7	2'-6"	1'-4"	12'-1"	15'-4 *
7.8 to 18.7	6	2'-0"	1'-4"	12'-1"	15'-4 *
>18.7	N O W A L L R E Q U I R E D				

1500 KVA

SEPARATION (J) FT.	WALL HEIGHT (H) FT.	FOOTING WIDTH (W) FT. END WALL	FOOTING WIDTH (W) FT. CENTER WALL	LENGTH OF END WALL (E) *	LENGTH OF CENTER WALL (C)
7.2	9	3'-0"	1'-8"	14'-9 *	15'-10"
8.1	8	2'-6"	1'-8"	14'-9 *	15'-10"
9.3	7	2'-6"	1'-4"	14'-9 *	15'-10"
10.8 TO 19.9	6	2'-0"	1'-4"	14'-9 *	15'-10"
>19.9	N O W A L L R E Q U I R E D				

150 KVA

SEPARATION (J) FT.	WALL HEIGHT (H) FT.	FOOTING WIDTH (W) FT. END WALL	FOOTING WIDTH (W) FT. CENTER WALL	LENGTH OF END WALL (E) *	LENGTH OF CENTER WALL (C)
3.9	9	3'-0"	1'-8"	10'-10"	14'-3"
4.4	8	2'-6"	1'-8"	10'-10"	14'-3"
5.0	7	2'-6"	1'-4"	10'-10"	14'-3"
5.9 TO 16.2	6	2'-0"	1'-4"	10'-10"	14'-3"
>16.2	N O W A L L R E Q U I R E D				

500 KVA

SEPARATION (J) FT.	WALL HEIGHT (H) FT.	FOOTING WIDTH (W) FT. END WALL	FOOTING WIDTH (W) FT. CENTER WALL	LENGTH OF END WALL (E) *	LENGTH OF CENTER WALL (C)
4.7	9	3'-0"	1'-8"	11'-6 *	15'-0"
5.3	8	2'-6"	1'-8"	11'-6 *	15'-0"
6.0	7	2'-6"	1'-4"	11'-6 *	15'-0"
7.0 TO 18.0	6	2'-0"	1'-4"	11'-6 *	15'-0"
>18.0	N O W A L L R E Q U I R E D				

1000 KVA

SEPARATION (J) FT.	WALL HEIGHT (H) FT.	FOOTING WIDTH (W) FT. END WALL	FOOTING WIDTH (W) FT. CENTER WALL	LENGTH OF END WALL (E) *	LENGTH OF CENTER WALL (C)
6.0	9	3'-0"	1'-8"	13'-6 *	15'-4 *
6.8	8	2'-6"	1'-8"	13'-6 *	15'-4 *
7.7	7	2'-6"	1'-4"	13'-6 *	15'-4 *
9.0 to 18.7	6	2'-0"	1'-4"	13'-6 *	15'-4 *
>18.7	N O W A L L R E Q U I R E D				

REINFORCING BAR SCHEDULE

WALL HEIGHT (H) FT.	"V" BARS (VERTICAL)	"D" BARS (DOWELS) CENTER WALL	"D" BARS (DOWELS) END WALL
9	*5 @ 0'-8" o.c.	D= 1'-4"	D=0'-8"
8	*5 @ 0'-8" o.c.	D=1'-1"	D=0'-8"
7	*5 @ 0'-24" o.c.	D=1'-1"	D=0'-6"
6	*5 @ 0'-24" o.c.	D=0'-10"	D=0'-6"

3'-0" "D"

* DIMENSION ROUNDED UP TO NEAREST INCH.

REV	DATE	DESCRIPTION	DWN	CKD	APP
	6/15/01	UDS MODS	EG		

P.O.
PROJECT NO.

U.S. DEPARTMENT OF ENERGY
KIRTLAND AREA OFFICE — ALBUQUERQUE, NEW MEXICO

SANDIA NATIONAL LABORATORIES

TRANSFORMER FIRE BARRIER WALL

FIRE BARRIER WALL
STANDARD DETAIL

CIVIL WORKS POWER — STANDARD

P.O.
PROJECT NO.
DRAWN BY D.C.
CHECKED BY T.R.
SNL ENGR
DATE
SIZE D+ DRAWING NO WP3003STD SEQ.

OLD FILE NAME: 101896/E03

MICROSTATION FILE
FILE NAME: WP3003STD.dgn
REFERENCE FILES:

"Property of Sandia National Laboratories Facilities Management and Operation Center (FMOC). No duplication or alteration allowed without the expressed permission and authorization of FMOC."