GENERAL NOTES:

1. FOR DETAILS OF MANHOLE, SEE SHEET E15A, 15B AND 15C.
2. FOR MISC. DETAILS, SEE SHEET E15B.
3. ALL CONCRETE TO BE 4000 PSI FOR PRE-CAST MANHOLE OR 3000 PSI FOR CAST-IN-PLACE MANHOLES.
4. ALL REBAR TO BE ASTM A615, GR 60.

KEYED NOTES:

1. SLOPE FLOOR TO DRAIN.
2. REFER TO PLAN AND PROFILE DRAWING FOR ELEVATION AND DEPTH OF MANHOLE ENTRANCE.

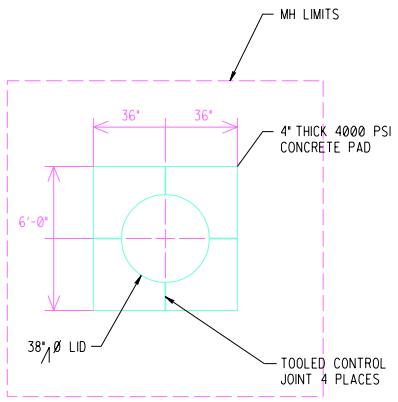

PLAN

UNPAVED SURFACES

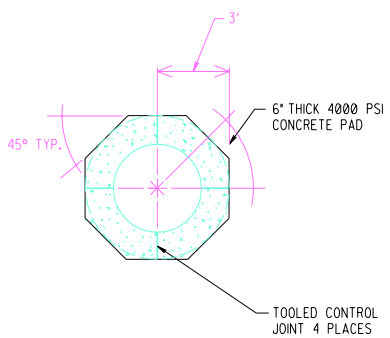

PLAN

PAVED AREAS

MANHOLE DETAIL

SCALE: 1/2"=1'-0"

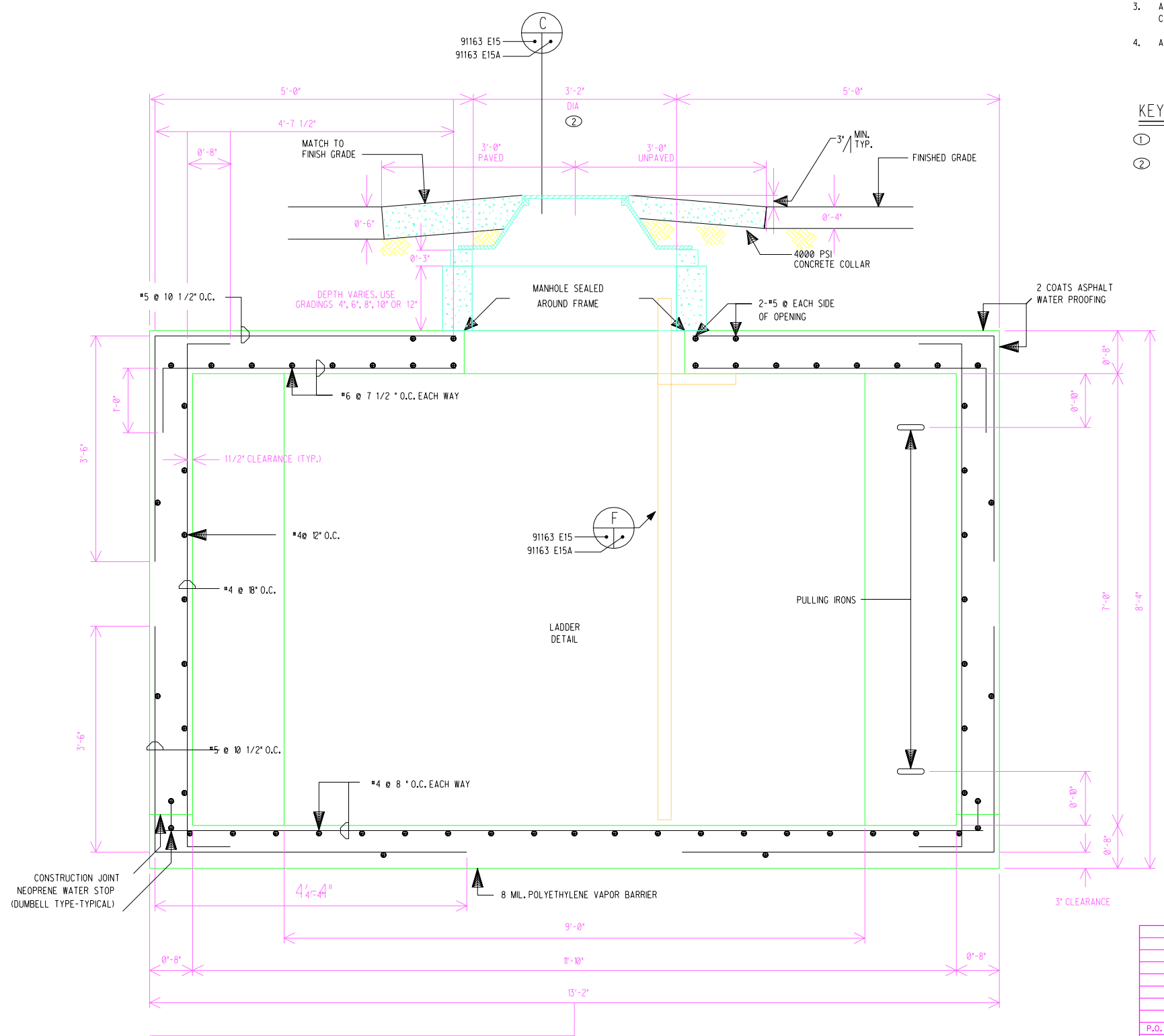

MANHOLE SECTION

SCALE: 1"=1'-0"

1

91163 E15 — 91163 E15A

REV	DATE	DESCRIPTION	DWN	CKD	APP
1	5/1/02	CONVERTED TO STANDARD DRAWING	ELG	GT	

P.O.
PROJECT NO.

U.S. DEPARTMENT OF ENERGY

KIRTLAND AREA OFFICE — ALBUQUERQUE, NEW MEXICO

SANDIA NATIONAL LABORATORIES

POWER MANHOLE PLAN AND SECTION

P.O.
PROJECT NO.
DRAWN BY
CHECKED BY
SNL ENGR
DATE 6-89

CIVIL WORKS POWER — STANDARD

SIZE D — DRAWING NO. WP1001STD — SEQ.

OLD FILE NAME: 091163/E15

MICROSTATION FILE

FILE NAME: WP001STD.dgn

REFERENCE FILES:

"Property of Sandia National Laboratories Facilities Management and Operation Center (FMOC). No duplication or alteration allowed without the expressed permission and authorization of FMOC."