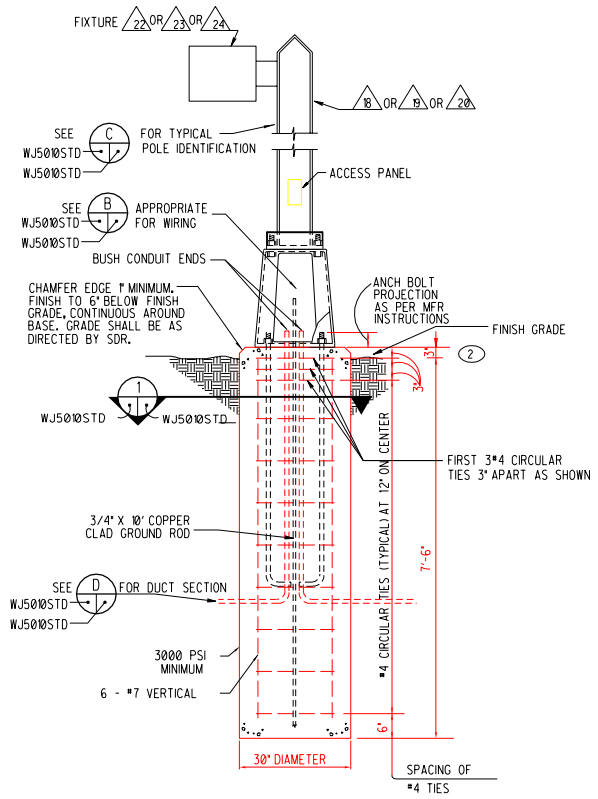

A LIGHT POLE DETAIL
WJ500STD
SCALE: NTS

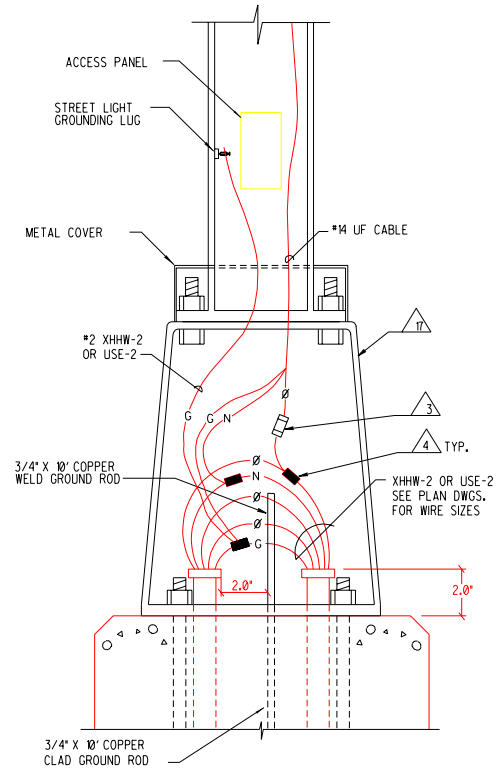

LINE-TO-NEUTRAL CONNECTION
SCALE: NTS

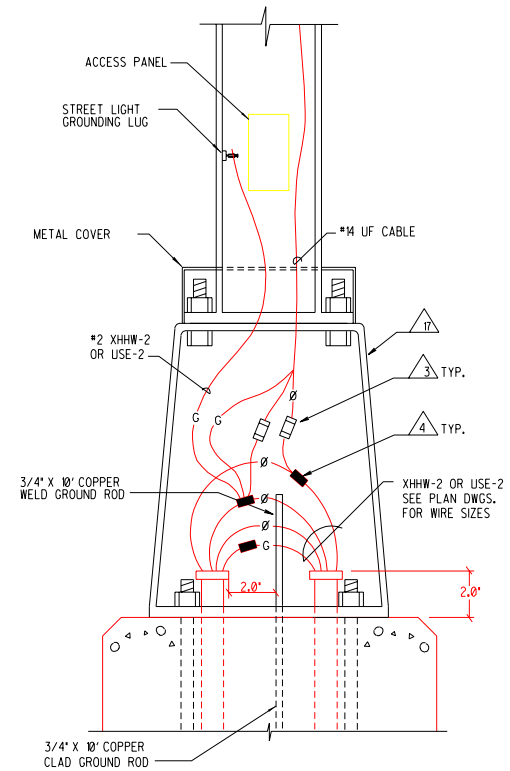

LINE-TO-LINE CONNECTION
SCALE: NTS

GENERAL NOTES

1. SEE PLANS FOR LOCATION OF POLES.
2. △ DENOTES SCHEDULED EQUIPMENT. SEE DRAWING WJ600STD.DGN FOR EQUIPMENT SCHEDULE.
3. DESIGN CRITERIA FOR CONCRETE POLE BASES.
   A. WIND: PER ASCE 7-93, BASIC WIND SPEED = 100 MPH I=1.0. EXPOSURE C.
   B. MINIMUM ALLOWABLE LATERAL BEARING PRESSURE OF SOIL: PER 1994 UNIFORM BUILDING CODE TABLE 18-I-A, CLASS "5" MATERIALS: 100 PSF PER FOOT WITH 100% INCREASE FOR ISOLATED POLES PER FOOTNOTE "3".
4. INSPECTION OF DRILLED PIERS WILL BE PROVIDED BY THE SDR. THE INSPECTOR WILL VERIFY THAT SOILS ARE ADEQUATE TO PROVIDE THE MINIMUM LATERAL BEARING PRESSURE SHOWN ABOVE. THE INSPECTOR WILL VERIFY PROPER DIAMETER, DEPTH AND CLEANING. CONTRACTOR SHALL COOPERATE WITH INSPECTOR AND OBTAIN INSPECTOR'S APPROVAL BEFORE CONCRETE IS PLACED.
5. SEE STANDARD SPEC. #16521 EXTERIOR LIGHTING UNITS.

KEYED NOTES

1. EACH POLE/LIGHT IDENTIFICATION IS SHOWN ON PLANS. IDENTIFICATION TO BE PLACED ON STREET OR SIDEWALK SIDE, AS DIRECTED BY SANDIA DELEGATED REPRESENTATIVE.
2. IN PARKING AREAS (LOTS), TOP OF CONCRETE FOUNDATION SHALL BE 30" ABOVE FINISHED GRADE.
3. EXTEND GROUND WIRE UP TO TOP OF CONCRETE FOUNDATION. BOND TO GROUND ROD.

B POLE BASE WIRING DETAILS
WJ500STD
WJ500STD
SCALE: NTS

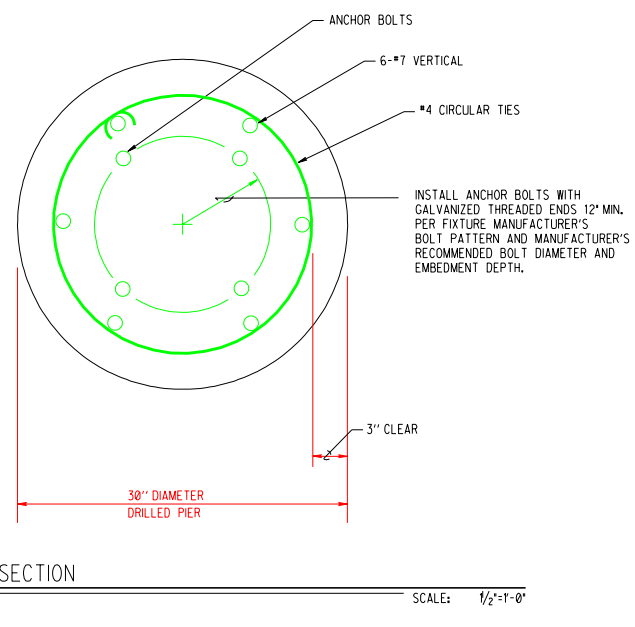

1 SECTION
WJ500STD
WJ500STD
SCALE: 1/2"=1'-0"

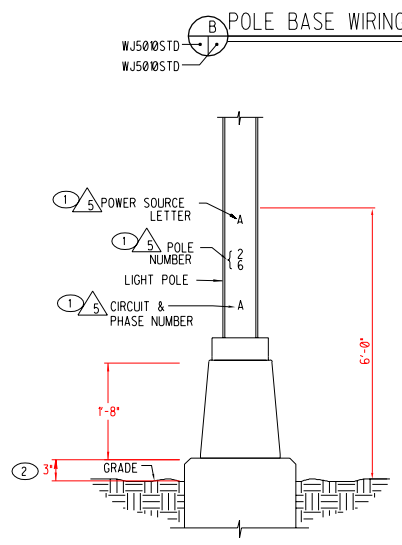

C POLE IDENTIFICATION DETAIL
WJ500STD
WJ500STD
SCALE: NTS

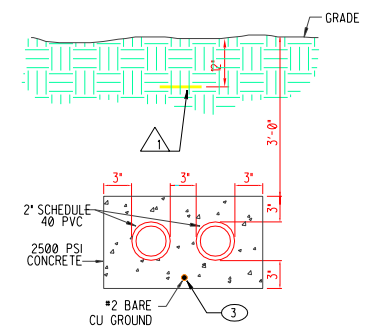

D CONCRETE ENCASED DUCT SECTION
WJ500STD
SCALE: NTS

P.O. / PROJECT NO.	REV	DATE	DESCRIPTION	DWN	CKD	APP
	△					
	△					
	△	1/15/03	UPDATE	EG	FL	
	△	6/15/01	UDS MODS	EG	FL	

U.S. DEPARTMENT OF ENERGY
KIRTLAND AREA OFFICE — ALBUQUERQUE, NEW MEXICO

SANDIA NATIONAL LABORATORIES

EXTERIOR LIGHTING DETAIL

P.O.	
PROJECT NO.	
DRAWN BY	YMA
CHECKED BY	
SNL ENGR	RR
DATE	2/3/2000

CIVIL WORKS — STANDARD

SIZE D+ — DRAWING NO WJ5010STD — SEQ. 15

MICROSTATION FILE
FILE NAME: WJ5010STD.dgn
REFERENCE FILES: BORDER3.dgn

"Property of Sandia National Laboratories Facilities Management and Operation Center (FMOC). No duplication or alteration allowed without the expressed permission and authorization of FMOC."