PREPARED BY: E. L. GORE	SANDIA NATIONAL LABORATORIES FACILITIES ENGINEERING	DRAWING NUMBER: WG5002STD
CHECKED BY: D. CAMPBELL		SCALE: NONE
DATE: 1/15/03 REV:	GAS VALVE BOX DETAIL	CIVIL WORKS STANDARD

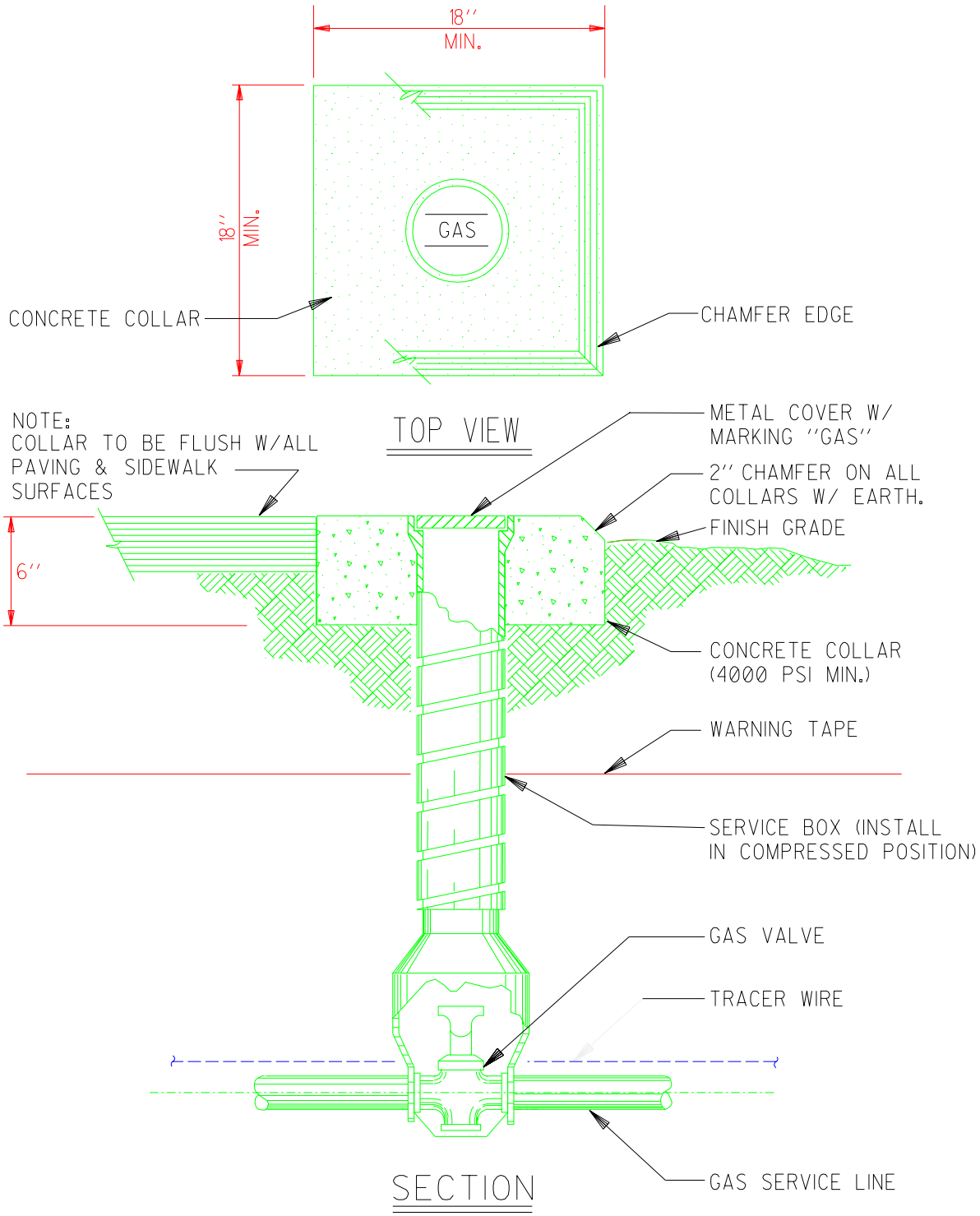

"Property of Sandia National Laboratories Facilities Management and Operation Center (FMOC).
No duplication or alteration allowed without the expressed permission and authorization of FMOC."