OLD FILE NAME: 101718/A1

PREPARED BY: E.S.M.	SANDIA NATIONAL LABORATORIES FACILITIES ENGINEERING	DRAWING NO.: WG3001
CHECKED BY: C.W.B.		SCALE: NONE
DATE: 6-15-01 / REV: A	GAS VALVE BOX DETAIL	CIVIL GAS STANDARD

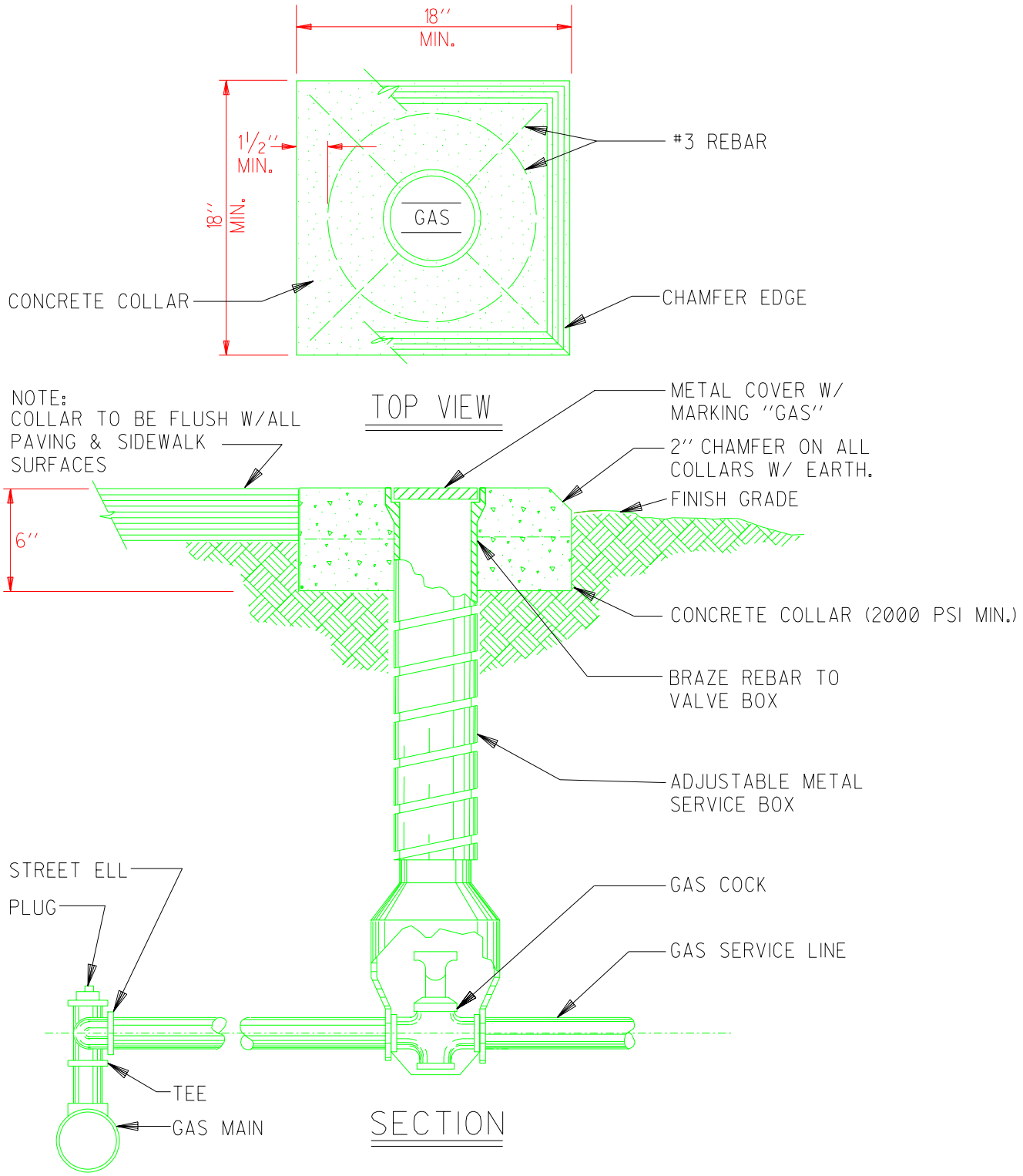

"Property of Sandia National Laboratories Facilities Management and Operation Center (FMOC).
No duplication or alteration allowed without the expressed permission and authorization of FMOC."