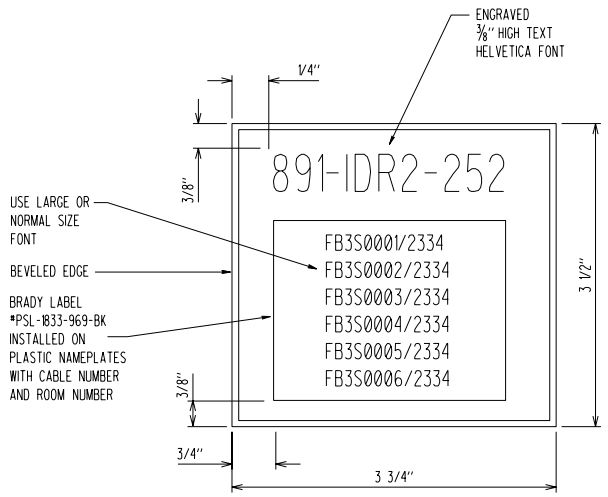

DETAIL - STANDARD ENGRAVING TEMPLATE FOR IDR LIU LABELS (TYPICAL 4-FIBER CABLE LIU LABEL)

1 T-5003 T-5003 SCALE: NTS

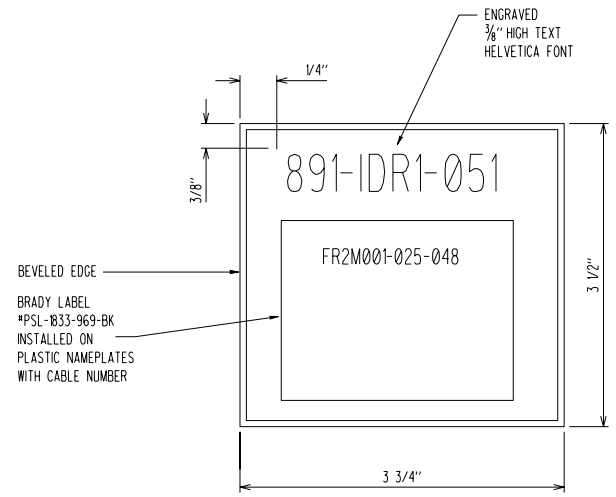

DETAIL - STANDARD ENGRAVING TEMPLATE FOR IDR LIU LABELS (TYPICAL TRUNK-FIBER CABLE LIU LABEL)

2 T-5003 T-5003 SCALE: NTS

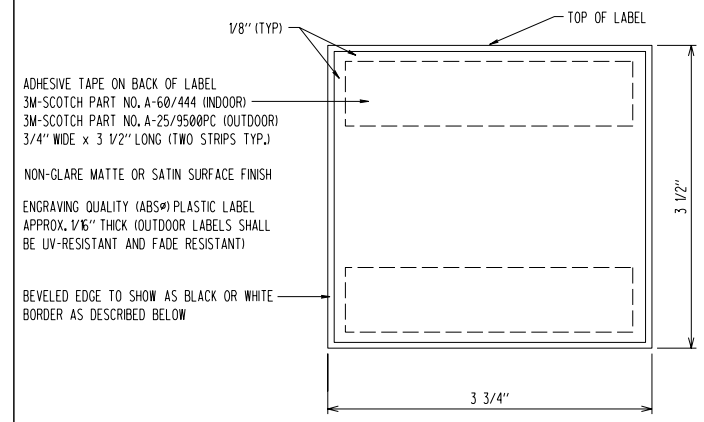

1. SINGLEMODE LABEL COLOR YELLOW * (XXX), WITH BLACK ENGRAVED LETTERING AND BLACK BEVELED EDGE.
2. MULTIMODE LABEL COLOR YELLOW * (XXX), WITH BLACK ENGRAVED LETTERING AND BLACK BEVELED EDGE.

DETAIL - STANDARD MATERIALS FOR IDR LIU LABELS

3 T-5003 T-5003 SCALE: NTS

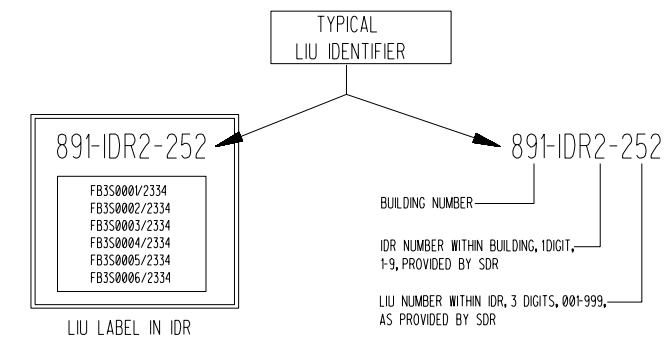

DETAIL - STANDARD NUMBERING SYSTEM FOR INTRA-BUILDING CABLE IDR LIU LABELS (LIU IDENTIFIER)

4 104033/E4 104033/E4 SCALE: NTS

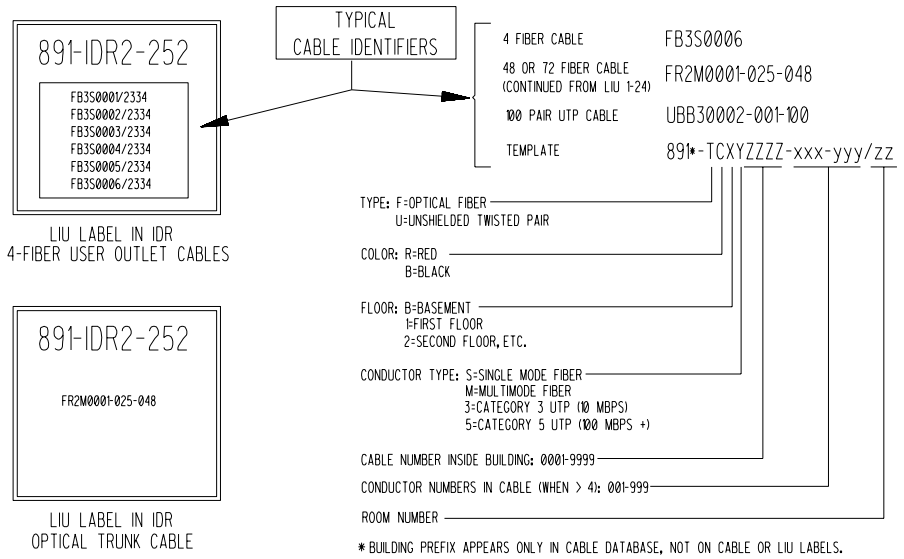

DETAIL - STANDARD NUMBERING SYSTEM FOR INTRA-BUILDING CABLE IDR LIU LABELS (CABLE IDENTIFIERS)

5 T-5003 T-5003 SCALE: NTS

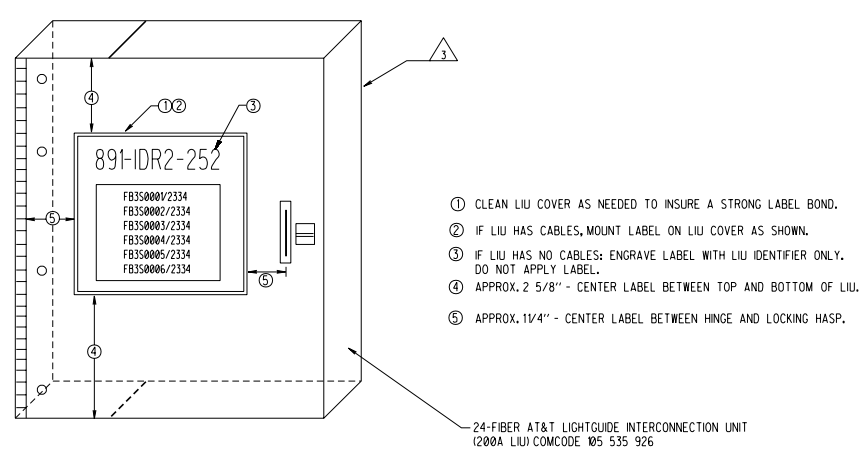

① CLEAN LIU COVER AS NEEDED TO INSURE A STRONG LABEL BOND.
② IF LIU HAS CABLES, MOUNT LABEL ON LIU COVER AS SHOWN.
③ IF LIU HAS NO CABLES: ENGRAVE LABEL WITH LIU IDENTIFIER ONLY. DO NOT APPLY LABEL.
④ APPROX. 2 5/8" - CENTER LABEL BETWEEN TOP AND BOTTOM OF LIU.
⑤ APPROX. 11/4" - CENTER LABEL BETWEEN HINGE AND LOCKING HASP.

DETAIL - STANDARD IDR LIU LABEL POSITIONING

6 T-5003 T-5003 SCALE: NTS

GENERAL NOTES

1. SEE STANDARD SPECIFICATION SECTION 16740 FOR LABELING REQUIREMENTS.

REV	DATE	DESCRIPTION	DWN	CKD	APP
B	6/15/01	UDS MODS	EG	FL	
A	11/97	COMMUNICATIONS STD MODS.	YMA	PD	

P.O. OR W.O. / PROJECT NO.: EP-0949

U.S. DEPARTMENT OF ENERGY
KIRTLAND AREA OFFICE
KIRTLAND AIR FORCE BASE EAST — ALBUQUERQUE, NEW MEXICO

SANDIA NATIONAL LABORATORIES FACILITIES ENGINEERING
ALBUQUERQUE, NEW MEXICO; LIVERMORE, CALIFORNIA; TONOPAH, NEVADA

COMMUNICATIONS IDR LABEL DETAILS

INTRA-BUILDING CABLING

P.O. OR W.O.	
PROJECT NO.	ES3419
DRAWN BY	PJ/H&N
CHECKED BY	JRM/H&N
APPROVED BY	
DATE	12/1/95
SEQ.	

TELECOMMUNICATIONS — STANDARD

T-5003STD — SIZE D+ — OLD FILE NAME: 104033E04

CAD DRAWING
COMPUTER SYSTEMS DEPT. 7901
FILE NAME: T-5003STD.dgn
REFERENCE FILES: BORDER3.dgn