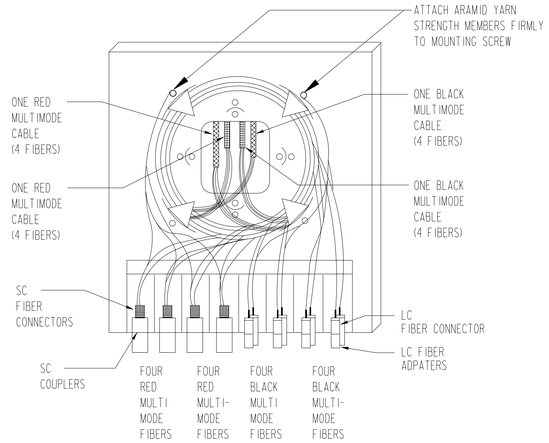

1 DETAIL - TYPICAL USER OUTLET (RED & BLACK) FIBER

T-5002 T-5002 SCALE: NONE

(1) WHERE CONTRACTOR INSTALLING CABLE DOES NOT TERMINATE AND TEST, PROVIDE PIGTAIL AS SPECIFIED IN SNL STANDARD SPECIFICATION NO. 1 6742 FOR EACH CABLE PULLED TO USER OUTLET. COIL CABLE NEATLY AND LEAVE FOR WORK BY OTHERS.

(2) REMOVE END PLATES FOR FIBER COUPLERS AND ADAPTERS AND RETURN TO SDR. WHERE CONTRACTOR INSTALLING CABLE IS ALSO TERMINATING AND TESTING, CONTRACTOR SHALL RETAIN PLATES.

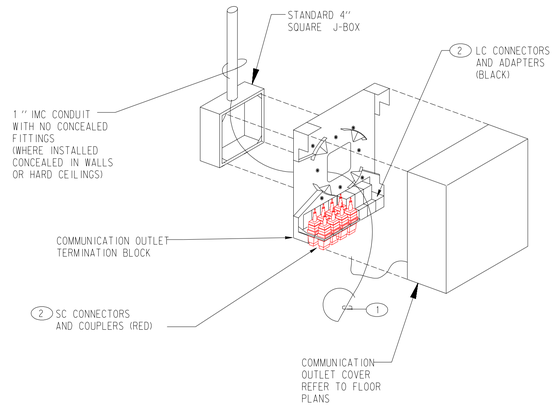

2 DETAIL - FIBER OUTLET MOUNTING

T-5002 T-5002 SCALE: NONE

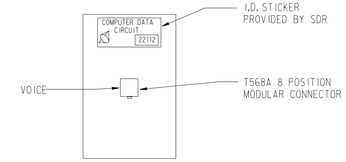

3 DETAIL - EUTP I.D. STICKER POSITIONING AND OUTLET PORT ASSIGNMENTS

T-5002 T-5002 SCALE: NONE

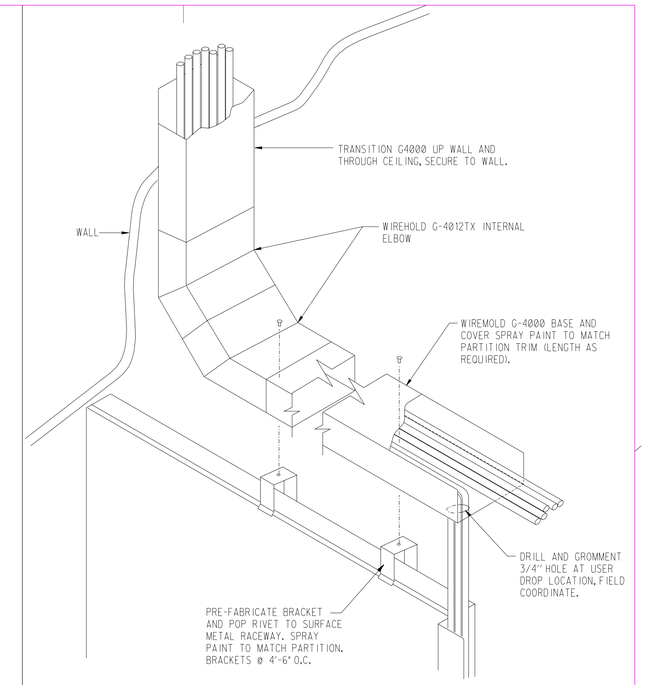

4 DETAIL- HERMAN MILLER OVERHEAD PARTITION BLACK OUTLET MOUNTING

T-5002 T-5002 SCALE: NONE

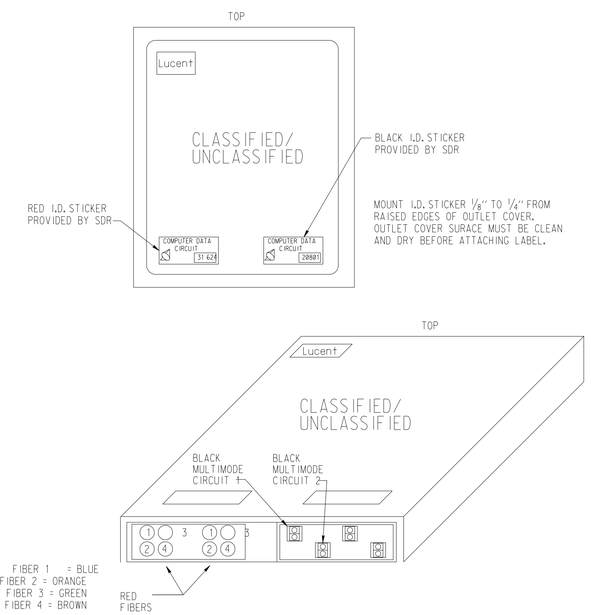

5 DETAIL - I.D. STICKER POSITIONING AND FIBER OUTLET PORT ASSIGNMENTS

T-5002 T-5002 SCALE: NONE

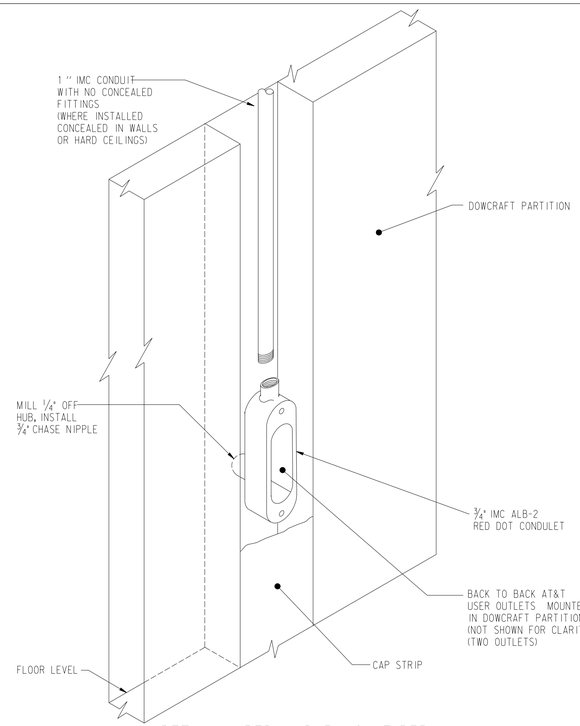

6 DETAIL - RED AND BLACK FIBER DOWCRAFT USER OUTLET INSTALLATION

T-5002 T-5002 SCALE: NONE

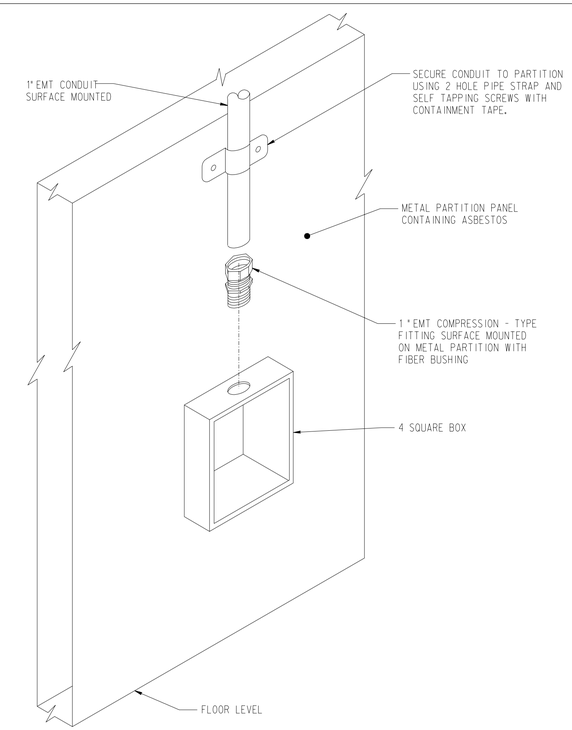

7 DETAIL - RED OR BLACK SURFACE MOUNTED

T-5002 T-5002 SCALE: NONE

REV	DATE	DESCRIPTION	DWN	CKD	APP
B	07-01-03	UPDATES	ELG	JRP	
A	12/99	MESA PROJECT	KLU	KLU	

P.O. 4004.01.05
PROJECT NO.

U.S. DEPARTMENT OF ENERGY
KIRTLAND AREA OFFICE ALBUQUERQUE, NEW MEXICO

SANDIA NATIONAL LABORATORIES

COMMUNICATIONS RED & BLACK OUTLETS

P.O.	
PROJECT NO.	ES3419
DRAWN BY	KAL/H&N
CHECKED BY	JRM/H&N
SNL ENGR	
DATE	12/1/95
SEQ.	

TELECOMMUNICATIONS STANDARD

SIZE D+ DRAWING NO T-5002STD

OLD FILE NAME: 104033/E02

MICROSTATION FILE
FILE NAME: AE5032STD.dgn
REFERENCE FILES: BORDER3.DGN

"Property of Sandia National Laboratories Facilities Management and Operation Center (FMOC). No duplication or alteration allowed without the expressed permission and authorization of FMOC."